55-1905-217-20P

TECHNICAL MANUAL

ORGANIZATIONAL MAINTENANCE REPAIR PARTS AND SPECIAL TOOLS LISTS

LANDING CRAFT, MECHANIZED, STEEL; DED; OVERALL LENGTH 74 FEET; MOD I MARK VIII, NAVY DESIGN

LCM-8

(GUNDERSON BROS. ENGINEERING CORP, MARINETTE MARINE CORP AND ROHR CORP

FSN 1905-935-6057

HEADQUARTERS, DEPARTMENT OF THE ARMY

JUNE 1973

D 101.11:

READEX FICHE best copy available

*TM 55-1905-217-20P

Technical Manual
No. 55-1905-217-20P

HEADQUARTERS
DEPARTMENT OF THE ARMY
Washington, D.C., *12 June 1973*

ORGANIZATIONAL MAINTENANCE REPAIR
PARTS AND SPECIAL TOOLS LIST

LANDING CRAFT, MECHANIZED, STEEL; DED; OVERALL LENGTH, 74 FEET; MOD I MARK VIII, NAVY DESIGN LCM-8

(GUNDERSON BROS ENGINEERING CORP, MARINETTE MARINE CORP AND ROHR CORP)

FSH 1905-935-6057

Current as of 30 March 1973

TABLE OF CONTENTS

			Page	Illus Figure
Section	I.	INTRODUCTION		
	II.	PRESCRIBED LOAD ALLOWANCE LIST (Not applicable)		
	III.	REPAIR PARTS LIST		
Group	01.	Air Inlet Silencer	1	1
	02.	Exhaust Manifold	2	2
	03.	Filter Assembly, Oil	3	3
	04.	Oil Filter, Dipstick and Breather	4	4
	05.	Oil Cooler (Engine)	5	5
	06.	Fuel Filter Assembly	6	6
	07.	Fuel Strainer (Engine Mtg)	9	7
	08.	Fuel Strainer (Line)	10	8,9
	09.	Fuel Piping	11	10,11,12
	10.	Fuel Pump	19	13
	11.	Rocker Arm Cover	20	14
	12.	Fuel Injectors	20	15
	13.	Injector Control Tube	21	16
	14.	Throttle Controls	21	17
	15.	Heat Exchanger (Engine)	22	18
	16.	Engine Cooling Piping	23	19,20
	17.	Sea Water Piping	28	21,22,23
	18.	Muffler and Exhaust Piping	37	24,25
	19.	Fresh Water Pump	40	26
	20.	Raw Water Pump	41	27,28
	21.	Water Manifold (Engine)	43	29
	22.	Sea Water Strainer Duplex	44	30
	23.	Keel Cooler	44	32
	24.	Engine Speed Governor	44	33
	26.	Transmission Oil Filter	46	36
	27.	Transmission Oil Strainer	47	37
	28.	Transmission Oil Cooler Core	48	38
	29.	Transmission Control Valve and Tubes	49	40
	30.	Tachometer Drive Cable, Adapter and Shaft	49	41

*This manual supersedes TM 55-1905-217-20P dated 27 October 1970 and all changes.

		Page	Illus Figure
31.	Transmission Oil Pump	50	42,43
32.	Power Take-Off Assembly	53	45
33.	Alternator, Regulator and Voltage Protector	54	46
34.	Electric Cranking Motor	56	47,48
35.	Hydraulic Starting Piping System	60	49,50,51
36.	Starting Engine, Hydraulic	69	52
37.	Solenoid Valve, Starting Motor	69	54
38.	Pump Hydraulic Starter	70	55,56
40.	Pump, Hand, Hydraulic Starting	71	
41.	Filter, Oil, Hydraulic Starter	71	59,60
42.	Transfer Gear Assembly	72	61
43.	Gear Assembly	72	
44.	Flywheel, Housing	72	63
51.	Oil Pan	73	71
55.	Cylinder Block	74	75
56.	Engine Pilot House Controls	74	
	Pilot house levers, sprockets and chain		76
	Engine control levers and brackets		78
	Engine control unit		79
	Pilot house engine controls		80
	Pilot house controls		83
	Pilot house engine controls		84
57.	Fan		88,89
58.	Engine Control and Distribution Panel		
	Distribution panel		90,91
	Cables, gages and lights		92
	Indicator and lights		93
	Ether starting aid		94
	Instruments and plate		95
59.	Navigational Lights and Horn	79	96
	Forward and main mast		97
60.	Helm Unit Steering	81	
61.	Piping, Steering	82	100,101,102 103,104
62.	Pump, Steering	92	105,106
63.	Pump, Drive (Coupling)	93	107
64.	Filter, Hydraulic	93	108,109
65.	Valve, Steering	94	
	Valve, check steering		110
	Valve, by-pass		111
67.	Cylinders, Hydraulic Steering	95	113
68.	Tank, Hydraulic	95	115,117
69.	Piping, Hydraulic Ramp Hoist	96	118,119,120, 121,122,123,
70.	Pump, Hydraulic Ramp	102	124,125
71.	Winch Ramp Hoist (Marco)	103	
	Winch gear reduction		127
	Winch base		128
72.	Winch Ramp Hoist, Gearmatic	103	
73.	Valve, Ramp Control		139
74.	Filter, Strainers	104	
	Filter, hydraulic oil		140
	Strainer, hydraulic oil		141
75.	Relief Valve	106	
76.	Check Valve	106	
77.	Counterbalance Valve	106	
78.	Hand Pump Hydraulic	106	145,146
79.	Tank, Hydraulic Oil Winch	106	147
80.	Cylinders Hydraulic (Ramp Latch)	107	
	Ramp latches		148
81.	Propeller Shaft	107	150
82.	Indicator, Rudder Angle and Transmitter	108	152,153
83.	Rudder	110	
	Rudder and tiller		154,155

		Page	Illus Figure
84.	Hull	110	
	Pilot house canopy		156
	Lift lines, bitts, and ladders		157
	Miscellaneous hull components		158
85.	Piping, Bilge	123	159,160,161 162,163
86.	Pump, Bilge	132	164,165, 166,167
87.	Pump, Bilge Hand	139	168
88.	Compass System	139	
Section IV.	SPECIAL TOOLS LIST (Not Applicable)		
V.	FEDERAL STOCK NUMBER AND REFERENCE NUMBER INDEX		

Section I.
INTRODUCTION

1. Scope

a. This manual lists repair parts, special tools, test and support equipment required for the performance of organizational maintenance of the landing craft.

b. Repair parts listed represent those authorized for use at the organizational level and will be requisitioned on an "as required" basis until stockage is justified by demand in accordance with AR 710-2.

2. General

This repair parts and special tools list is divided into the following sections:

a. Prescribed Load Allowance List - Section II. Not applicable.

b. Repair Parts List - Section III. A list of repair parts authorized at the organizational level for the performance of maintenance. The list also includes parts which must be removed for replacement of the authorized parts. Parts lists are composed of assembly groups in ascending numerical sequence, with the parts in each group listed in figure and item number sequence.

c. Special Tools List - Section IV. A list of special tools, test and support equipment authorized for the performance of maintenance at the organizational level. (Not applicable).

d. Federal Stock Number and Reference Number Index - Section V. A list, in ascending numerical sequence, of all Federal stock numbers appearing in the listings, followed by a list, in alpha-numeric sequence, of all reference numbers appearing in the listings. Federal stock number and reference numbers are cross-referenced to each illustration figure and/or item number.

3. Explanation of Columns

The following provides an explanation of columns found in the tabulated listings in Section III.

a. Source, Maintenance, and Recoverability Codes (SMR). The SMR code is a five letter code composed of three parts consisting of a two (2) position source code, a two (2) position maintenance code, and a one (1) position recoverability code. Support items listed in this RPSTL assigned maintenance and recoverability codes and no source code can be requisitioned, with justification, through normal supply channels by use of the manufacturers code and part number. Such support items are NOT normally stocked.

(1) *Source Code.* Indicates the manner of acquiring support items for maintenance, repair, or overhaul of end items. Source codes are entered in the *first* and *second* positions as follows:

Code	*Definition*
PA	Item procured and stocked for anticipated or known usage.
PB	Item procured and stocked for insurance purposes because essentiality dictates that a minimum quantity be available in the supply system.
PC	Item procured and stocked and which otherwise would be coded PA except that it is deteriora- in nature.
PD	Support item, excluding support equipment, procured for initial issue or outfitting and stocked only for subsequent or additional initial issue or outfittings. NOT subject to automatic replenishment.
PE	Support equipment procured and stocked for initial issue or outfittings to specified maintenance repair activities.
PF	Support equipment which will not be stocked but which will centrally procured on demand.
PG	Item procured and stocked to provide for sustained support for life of the equipment. It is applied to an item peculiar to the equipment which, because of probably discontinuance or shutdown of production facilities, would prove uneconomical to reproduce at a later date.
KD	An item of depot overhaul/repair kit and not purchased separately.
KF	An item of a maintenance kit and not purchased separately.
KB	Item included in both a depot overhaul/repair kit and a maintenance kit.
MO	Item to be manufactured or fabricated at organizational level.
MF	Item to be manufactured or fabricated at direct support maintenance level.
MH	Item to be manufactured or fabricated at general maintenance support level.
MD	Item to be manufactured or fabricated at depot maintenance level.
AO	Item to be assembled at organizational level.
AF	Item to be assembled at direct support maintenance level.

Code	Definition
AH	Item to be assembled at general support maintenance level.
AD	Item to be assembled at depot maintenance level.
XA	Item is NOT procured or stocked because the requirements for the item will result in replacement of the next higher assembly.
XB	Item NOT procured or stocked. If not available through salvage, requisition.
XC	Installation drawing, diagram, instruction sheet, or field service drawing that is identified by manufacturer's part number.
XD	A low mortality item that is not stocked. When required, items will be requested and provided through normal supply channels.

NOTE

Cannibalization or salvage may be used as a source of supply for any items coded above *except* those coded XA and support items restricted by AR 700-42.

(2) *Maintenance Codes.* The maintenance code entered in the *third* position indicates the lowest maintenance level authorized to remove, replace, and use the item. The maintenance code entered in the *fourth* position indicates whether the item is to be repaired and identifies the lowest maintenance level with the capability to perform complete repair (i.e., all authorized maintenance functions). When a maintenance code is not used in the *fourth* position, a dash (-) will be entered.

Code	Application/Explanation
O	Item is removed, replaced, used (third position), or complete repair (fourth position) at the organizational level.
F	Item is removed, replaced, used (third position), or complete repair (fourth position) at the direct support maintenance level.
H	Item is removed, replaced, used (third position) or complete repair (fourth position) at the general support maintenance level.
D	Item is removed, replaced, used (third position) or complete repair (fourth position) at the depot maintenance level.
L	Repair restricted to designated specialized repair activity (fourth position).
Z	Non-repairable. No repairs authorized (fourth position).
B	No repair is authorized. The item may be reconditioned by adjusting, lubricating, etc., at the *user* level. No parts or special tools are procured for maintenance of this item (fourth position).

(3) *Recoverability Code.* The recoverability code entered in the *fifth* position indicates the disposition action on unserviceable items.

Code	Definition
Z	Non-repairable item. When unserviceable, condemn and dispose at the level indicated in position three (3).
C	Repairable item. When uneconomically repairable, condemn and dispose at organizational level.
F	Repairable item. When uneconomically repairable, condemn and dispose at direct support level.
H	Repairable item. When uneconomically repairable, condemn and dispose at general support level.
D	Repairable item. When beyond lower level repair capability, return to depot. Condemnation and disposal not authorized below depot level.
L	Repairable item. Repair, condemnation, and disposal not authorized below depot/specialized repair activity level.
A	Item requires special handling or condemnation procedures because of specific reasons (i.e., precious metal content, high dollar value, critical material, or hazardous material).

b. Federal Stock Number. Indicates the Federal stock number assigned to the item and will be used for requisitioning purposes.

c. Description. Indicates the Federal item name and a minimum description required to identify the item. The last line indicates the reference number followed by the applicable Federal Supply Code for Manufacturer (FSCM) in parenthesis. The FSCM is used as an element in item identification to designate manufacturer or distributor or Government agency, etc., and is identified in SB 708-42. Items that are included in kits and sets are listed below the name of the kit or set with quantity of each item in the kit or set indicated in front of the item name.

d. Unit of Measure (U/M). Indicates the standard or basic quantity by which the listed item is used in performing the actual maintenance function. This measure is expressed by a two-character alphabetical abbreviation, e.g., ea, in, pr, etc., and is the basis used to indicate quantities and allowances in subsequent columns.

e. Quantity Incorporated in Unit. Indicates the quantity of the item used in the breakout shown on the illustration figure, which is prepared for an assembly group, or an assembly. A "V" appearing in this column in lieu of a quantity indicates that no specific quantity is applicable, e.g., shims, spacers, etc.

f. 15-Day Organizational Maintenance Allowances.

(1) Items authorized for use as required but not for initial stockage are identified with an asterisk in the allowance column.

(2) The allowance columns are divided into four subcolumns. Indicated in each subcolumn is the total quantity of special tools authorized for the number of equipments supported. (Not applicable).

g. Illustration. This column is divided as follows:

(1) *Figure number.* Indicates the figure number of the illustration in which the item is shown.

(2) *Item number.* Indicates the callout number used to reference the item on the illustration.

4. Special Information

a. Usable on codes are included in Column 3. Uncoded items are applicable to all models and/or serial number range. Identification of the usable on codes used in this publication are:

Code	Used On
A	Marinette Marine Corp LCM 8500 Thru LCM 8519
B	Gunderson Bros Engineering Corp LCM 8520 thru 8539
C	Rohr Corp LCM 8540 thru 8619

b. The basis of issue for authorized special tools, test and support equipment is the number of end items of equipment supported and the number of maintenance personnel allocated to perform the required maintenance operations.

c. Parts which require manufacture or assembly at a level higher than that authorized for installation will indicate in the source column the higher level.

d. Repair parts kits and gasket sets appear as the last entries in the repair parts listing for the group or assembly to which they apply.

e. Action change codes indicated in the left hand margin of the listing page denote the following:

N - Indicates an added item.
C - Indicates a change in data.
R - Indicates a change in FSN only.

f. The following publications pertain to the landing craft and its components.

TM 55-1905-217-12 Operator and Organizational Maintenance Manual

g. The illustrations in this manual are identical to the applicable illustrations published in the -34P, Direct and General Support Maintenance Repair Parts and Special Tools List manual (including Depot maintenance repair parts and special tools, and the figure numbers are the same as appear in that manual. The -34P illustrations are given for a better understanding of the parts relationship, however, only those parts assigned maintenance code "O" are listed in the tabular list. Only illustrations containing organizational authorized items appear in this manual.

5. How to Locate Repair Parts

a. When Federal Stock Number or Reference Number is unknown:

(1) Using the table of contents determine the assembly group within which the repair part belongs. This is necessary since illustrations are prepared for assembly groups, and listings are divided into the same groups.

(2) Find the illustration covering the assembly group to which the repair part belongs.

(3) Identify the repair part on the illustration and note the illustration figure and item number of the repair part.

(4) Using the repair parts listing, find the assembly group to which the repair part belongs and locate the illustration figure and item number noted on the illustration.

b. When the Federal Stock Number or Reference Number is known:

(1) Using the Index of Federal Stock Number and Reference Numbers find the pertinent Federal Stock Number or reference number. This index is in ascending FSN sequence followed by a list of reference numbers in ascending alpha-numeric sequence, cross-referenced to the illustration figure number and item number.

(2) Using the Repair Parts Listing, find the assembly group of the repair part and the illustration figure number and item number referenced in the index of Federal Stock Numbers and Reference Numbers.

6. Abbreviations

amp . . . . . ampere(s)
cont . . . . . continuous
deg . . . . . degree(s)
ea . . . . . each
ft . . . . . foot (feet)
hex . . . . . hexagon
id . . . . . inside diameter
in . . . . . inch(es)
lb . . . . . pound
lg . . . . . length (long)
lh . . . . . left hand
mtg . . . . . mounting(s)
No. . . . . number
od . . . . . outside diameter
rh . . . . . right hand
sh . . . . . sheet
sq . . . . . square
thd . . . . . thread(s)(ed)
v . . . . . volt(s)
yd . . . . . yard

7. Recommendations for Maintenance Publications Improvements

You can improve this manual by calling attention to errors and by recommending improvements, using DA Form 2028 (Recommended Changes to Publications) or by letter, and mailing direct to Commander, U. S. Army Troop Support Command, ATTN: AMSTS-MPP, St. Louis, Missouri 63120. A reply will be furnished directly to you.

(1) SMR CODE	(2) FEDERAL STOCK NUMBER	(3) DESCRIPTION — REF NUMBER & MFR CODE	USABLE ON CODE	(4) UNIT OF MEAS	(5) QTY INC IN UNIT	(6) 15-DAY ORGANIZATIONAL MAINTENANCE ALW (a) 1-5	(b) 6-20	(c) 21-50	(d) 51-100	(7) ILLUSTRATION (a) FIG. NO.	(b) ITEM NO.
		SECTION III - REPAIR PARTS FOR ORGANIZATIONAL MAINTENANCE									
		GROUP 01 - AIR INLET SILENCER									
PAOZZ	5305-206-6786	SCREW, CAP, HEXAGON HEAD: INLET AIR SILENCER MTG, 3/8-16 THD SIZE, 3 3/4 IN. LG 191249 (72582)		EA	24	•	•	•	•	1	1
PAOZZ	5310-637-9541	WASHER, LOCK: INLET AIR SILENCER MTG, 3/8 IN. SCREW SIZE MS35338-46 (96906)		EA	24	•	•	•	•	1	2
PAOZZ	2990-363-7395	SILENCER ASSEMBLY, AIR INLET 5189847 (72582)		EA	4	•	•	•	•	1	3
PAOZZ	5306-225-8494	BOLT, MACHINE: SCREEN MTG, 5/16-18 THD SIZE, 1/2 IN. LG 106973 (72582)		EA	16	•	•	•	•	1	4
PAOZZ	5310-407-9566	WASHER, LOCK: SCREEN MTG, 5/16 IN. SCREW SIZE MS35338-45 (96906)		EA	4	•	•	•	•	1	5
PAOZZ	2815-898-4228	SCREEN: AIR SILENCER 1543776 (72582)		EA	8	•	•	•	•	1	6
MFOZZ		ELEMENT, STRAINER: BLOWER SCREEN 5111881 (72582) (PART OF GASKET SET, FSN 5330-379-4301)		EA	4					1	7
MFOZZ		GASKET: INLET AIR SILENCER MTG 3290572 (72582) (PART OF GASKET SET, FSN 5330-379-4301)		EA	4					1	8
PCOZZ	5330-379-4301	GASKET SET, ENGINE OVERHAUL 5193115 (72582) (CONSISTS OF)		EA	4	•	•	•	•		
		1-ELEMENT								1	7
		1-GASKET								1	8
		2-GASKET								2	25
		1-GASKET								2	26
		4-GASKET								4	20
		1-PACKING								5	9
		1-GASKET								5	18
		1-GASKET								5	20
		2-GASKET								5	25
		1-WASHER								5	26
		1-WASHER								5	28
		2-GASKET								13	2
		4-WASHER								13	19
		2-GASKET								14	2
		2-GASKET								26	2
		1-PACKING								26	6
		1-GASKET								26	11
		1-PACKING								29	9
		6-GASKET								29	14

(1) SMR CODE	(2) FEDERAL STOCK NUMBER	(3) DESCRIPTION REF NUMBER & MFR CODE / USABLE ON CODE	(4) UNIT OF MEAS	(5) QTY INC IN UNIT	(6) 15-DAY ORGANIZATIONAL MAINTENANCE ALW (a) 1-5	(b) 6-20	(c) 21-50	(d) 51-100	(7) ILLUSTRATION (a) FIG. NO.	(b) ITEM NO.
		4-GASKET							33	3
		2-GASKET							33	6
		1-GASKET							33	22
		1-GASKET							33	31
		2-GASKET							33	69
		2-GASKET							34	4
		1-GASKET							35	3
		1-WASHER							35	5
		1-BLOWER							35	8
		2-GASKET							38	12
		2-GASKET							38	14
		2-GASKET							41	4
		2-GASKET							55	5
		2-GASKET							63	12
		1-GASKET							63	26
		4-GASKET							67	14
		1-GASKET							67	16
		1-GASKET							67	17
		2-WASHER							67	18
		6-GASKET							67	19
		2-GASKET							67	20
		1-GASKET							68	11
		2-GASKET							70	4
		1-GASKET							71	11
		1-GASKET							72	3
		4-GASKET							72	20
		3-GASKET							72	71
		3-GASKET							72	24
		1-GASKET							72	56
		2-GASKET							72	58
		2-GASKET							75	32
		1-GASKET							75	41
		8-GASKET							75	44
		8-GASKET							75	46
		GROUP 02 - EXHAUST MANIFOLD								
PAOZZ	4730-499-3597	CLIP, TUBE 5171509 (72582)	EA	4	•	•	•	•	2	8
PCOZZ	4720-189-9730	TUBE, RUBBER: 3/8 IN. DIA, 26 IN. LG 5166750 (72582)	EA	4	•	•	•	•	2	9
PAOZZ	4820-845-1096	COCK, DRAIN: MANIFOLD MB35783-2 (96906)	EA	4	•	•	•	•	2	10

(1) SMR CODE	(2) FEDERAL STOCK NUMBER	(3) DESCRIPTION REF NUMBER & MFR CODE	USABLE ON CODE	(4) UNIT OF MEAS	(5) QTY INC IN UNIT	(6) 15-DAY ORGANIZATIONAL MAINTENANCE ALW (a) 1-5	(b) 6-20	(c) 21-50	(d) 51-100	(7) ILLUSTRATION (a) FIG. NO.	(b) ITEM NO.
PAOZZ	5310-012-3197	NUT, PLAIN, HEXAGON: PLATE AND CLIP MTG, 5/16-18 THD SIZE 123197 (72582)		EA	44	•	•	•	•	2	11
PAOZZ	5310-407-9566	WASHER, LOCK: MANIFOLD DRAIN, TUBE CLIP AND PLATE, 5/16 IN. SCREW SIZE MS35338-45 (96906)		EA	44	•	•	•	•	2	12
C PAOZZ	2815-981-1529	PLATE: EXHAUST, PLAIN 5119921 (72582)		EA	8	•	•	•	•	2	13
PCOZZ	5330-298-5706	GASKET: EXHAUST MANIFOLD BY-PASS 5156319 (72582)		EA	2	•	•	•	•	2	14
PAOZZ	5307-886-3438	STUD, PLAIN: PLATE MTG 5123282 (72582)		EA	40	•	•	•	•	2	15
PACZZ	4730-044-4867	PLUG, PIPE: MANIFOLD DRAIN 5182580 (72582)		EA	4	•	•	•	•	2	16
C PAOZZ	2815-019-4682	PLATE: EXHAUST, TAPPED 5119926 (72582)		EA	4	•	•	•	•	2	17
C PAOZZ	2930-363-8226	PLATE, COVER: EXHAUST, PLAIN TAPPED 5119923 (72582)		EA	4	•	•	•	•	2	18
PAOZZ	5310-141-3669	NUT, PLAIN, HEXAGON: EXHAUST MANIFOLD, BY-PASS TUBE, 5/16-18 THD SIZE 123197 (72582)		EA	4	•	•	•	•	2	
PAOZZ	5310-407-9566	WASHER, LOCK: 5/16 IN. EXHAUST MANIFOLD BY-PASS TUBE, 5/16 IN. SCREW SIZE MS35338-45 (96906)		EA	4	•	•	•	•	2	
PAOZZ	4730-908-3194	CLAMP, HOSE: EXHAUST MANIFOLD, BY-PASS HOSE MS35842-11 (96906)		EA	4	•	•	•	•	2	
PCOZZ	4720-288-9770	HOSE, PREFORMED: EXHAUST MANIFOLD, BY-PASS 5177217 (72582)		EA	2	•	•	•	•	2	
		GROUP 03 - FILTER ASSEMBLY, OIL									
R PAOZZ	2940-836-8263	FILTER ASSEMBLY, OIL: ENGINE 5196393 (72582)		EA	4	•	•	•	•	3	1
PACZZ	5306-870-6222	BOLT, LUBE FILTER, CENTER 5120740 (72582)		EA	4	•	•	•	•	3	2
R PACZZ	5365-579-5983	RING, RETAINER SNAP: FILTER SPRING 5120602 (72582)		EA	4	•	•	•	•	3	3
PACZZ	5330-629-6340	RETAINER, LUBE: OIL FILTER SPRING 5187309 (72582)		EA	4	•	•	•	•	3	4
PCCZZ	5330-604-8094	PACKING, PREFORMED: COVER NUT 5187310 (72582)		EA	4	•	•	•	•	3	5
C PACZZ	5340-262-4701	SPACER, RING: SEAT 5154538 (72582)		EA	4	•	•	•	•	3	6
PACZZ	5340-801-8731	SPRING, HELICAL, COMPRESSION: OIL FILTER 5187308 (72582)		EA	4	•	•	•	•	3	7
R PCCZZ	5330-657-7636	GASKET: COVER STUD 5572799 (72582)		EA	4	•	•	•	•	3	8
XDOZZ		SHELL OIL FILTER: INCLUDES PLUG 5574008 (72582)		EA	4					3	9
R PAOZZ	4820-360-8299	PLUG, PIPE: OIL FILTER SHELL 5570480 (72582)		EA	4	•	•	•	•	3	10
C PACZZ	2940-580-6238	ELEMENT, FILTER: OIL FILTER PF132 (70040)		EA	4	•	•	•	•	3	11

(1) SMR CODE	(2) FEDERAL STOCK NUMBER	(3) DESCRIPTION REF NUMBER & MFR CODE	USABLE ON CODE	(4) UNIT OF MEAS	(5) QTY INC IN UNIT	(6) 15-DAY ORGANIZATIONAL MAINTENANCE ALW (a) 1-5	(b) 6-20	(c) 21-50	(d) 51-100	(7) ILLUSTRATION (a) FIG. NO.	(b) ITEM NO.
PCCZZ	5330-290-7860	WASHER, NONMETALLIC: OIL SHELL 5571024 (72582)		EA	4	•	•	•	•	3	12
XAOZZ		ADAPTER, COVER, OIL FILTER 5123382 (72582)		EA	4					3	13
PAOZZ	4730-886-5967	PLUG, MACHINE: OIL FILTER BY-PASS VALVE 5126686 (72582)		EA	4	•	•	•	•	3	14
PAOZZ	5330-736-3508	WASHER, NONMETALLIC: BY-PASS PLUG 5575086 (72582)		EA	4	•	•	•	•	3	15
XAOZZ		SPRING, HELICAL: BY-PASS VALVE 5133594 (72582)		EA	4					3	16
PAOZZ	2940-944-6249	VALVE: OIL FILTER BY-PASS 5133431 (72582)		EA	4	•	•	•	•	3	17
PAOZZ	4730-187-4207	PLUG, PIPE: 1/4 IN. 5145010 (72582)		EA	4	•	•	•	•	3	18
R PAOZZ	5305-225-8510	SCREW, CAP, HEXAGON HEAD: BRACKET MTG MS90725-46 (96906)		EA	12	•	•	•	•	3	19
R PAOZZ	5310-407-9566	WASHER, LOCK: BRACKET MTG, 5/16 IN. SCREW SIZE MS35338-45 (96906)		EA	12	•	•	•	•	3	20
XDOZZ		BRACKET, OIL FILTER MOUNTING 5112134 (72582)		EA	4					3	21
XDOZZ		SPACER, OIL FILTER MOUNTING 5111462 (72582)		EA	12					3	22
PAOZZ	5305-269-3210	SCREW, CAP, HEXAGON HEAD: OIL FILTER MTG, 3/8-16 THD SIZE, 7/8 IN. LG MS90725-59 (96906)		EA	16	•	•	•	•	3	23
PAOZZ	5310-637-9541	WASHER, LOCK: OIL FILTER MTG, 3/8 IN. SCREW SIZE MS35338-46 (96906)		EA	16	•	•	•	•	3	24
PCOZZ	4720-788-5956	HOSE ASSEMBLY, OIL FILTER INLET 5182894 (72582)	AB	EA	2	•	•	•	•	3	
PAOZZ	4730-273-6041	ADAPTER, STRAIGHT: OIL FILTER INLET AND OUTLET HOSE 5177694 (72582)	AB	EA	2	•	•	•	•	3	
PCOZZ	2815-421-1473	HOSE, OIL FILTER OUTLET 5112421 (72582)	AB	EA	2	•	•	•	•	3	
N PCOZZ	4720-494-1701	HOSE ASSEMBLY, OIL FILTER INLET 5144542 (72582)	C	EA	2	•	•	•	•	3	
N PCOZZ	4720-494-1744	HOSE, OIL FILTER OUTLET 5144188 (72582)	C	EA	2	•	•	•	•	3	
N PAOZZ	4730-334-7839	CONNECTOR, OIL FILTER HOSE 9402711 (72582)	C	EA	4	•	•	•	•	3	
		GROUP 04 - OIL FILLER, DIP STICK AND BREATHER									
PAOZZ	2815-288-3642	CAP, OIL FILLER TUBE 5156498 (72582)		EA	4	•	•	•	•	4	1
R PAOZZ	5330-530-2527	GASKET, OIL FILLER CAP 1543857 (72582)		EA	4	•	•	•	•	4	2
C PAOZZ	4010-812-0529	CHAIN, CAP 5167502 (72582)		EA	4	•	•	•	•	4	3
PAOZZ	2910-588-8440	TUBE: OIL FILLER 5167485 (72582)		EA	4	•	•	•	•	4	4
PAOZZ	4730-595-0792	STRAINER, ELEMENT: OIL FILLER TUBE 5150147 (72582)		EA	4	•	•	•	•	4	5

(1) SMR CODE	(2) FEDERAL STOCK NUMBER	(3) DESCRIPTION REF NUMBER & MFR CODE	USABLE ON CODE	(4) UNIT OF MEAS	(5) QTY INC IN UNIT	(6) 15-DAY ORGANIZATIONAL MAINTENANCE ALW (a) 1-5	(b) 6-20	(c) 21-50	(d) 51-100	(7) ILLUSTRATION (a) FIG. NO.	(b) ITEM NO.
C PAOZZ		GAGE, OIL LEVEL 5109292 (72582)		EA	4	•	•	•	•	4	6
C PAOZZ	5305-269-3223	SCREW, CAP, HEXAGON HEAD: DIP STICK ADAPTER CLIP, 3/8-16 THD SIZE, 3 3/4 IN. LG MS90725-73 (96906)		EA	4	•	•	•	•	4	7
PAOZZ	5310-637-9541	WASHER, LOCK: DIP STICK ADAPTER CLIP, 3/8 IN. SCREW SIZE MS35338-46 (96906)		EA	4	•	•	•	•	4	8
C XDOZZ		CLIP, DIP STICK 5126478 (72582)		EA	4					4	9
C PAOZZ	2815-922-2027	SPACER, OIL LEVEL GAGE CLIP: 13-32 THD SIZE, 3/4 X 1 13/16 IN. LG 5173144 (72582)		EA	4	•	•	•	•	4	10
C PAOZZ	2815-947-4290	ADAPTER, GUIDE DIP STICK 5151430 (72582)		EA	4	•	•	•	•	4	11
C PAOZZ		ADAPTER: DIP STICK 5109777 (72582)		EA	4	•	•	•	•	4	12
C PAOZZ	5305-225-8501	SCREW, CAP, HEXAGON HEAD: BREATHER TUBE CLIP, 5/16-18 THD SIZE, 1 3/8 IN. LG MS90725-37 (96906)		EA	4	•	•	•	•	4	13
PAOZZ	5310-407-9566	WASHER, LOCK: BREATHER TUBE CLIP, 5/16 IN. SCREW SIZE MS35338-45 (96906)		EA	4	•	•	•	•	4	14
PAOZZ	5310-081-4219	WASHER, FLAT: BREATHER TUBE CLIP, 5/16 IN. SCREW SIZE 120393 (72582)		EA	8	•	•	•	•	4	15
C PAOZZ	5340-719-7774	CLIP: BREATHER TUBE 5128751 (72582)		EA	4	•	•	•	•	4	16
C PAOZZ		SPACER: BREATHER TUBE, 1/4 PIPE, 7/8 IN. LG 5182645 (72582)		EA	4	•	•	•	•	4	17
PAOZZ	5305-614-0274	SCREW, CAP, FILLISTER HEAD: BREATHER TUBE MTG, NO. 10-24 THD SIZE, 1/2 IN. LG MS35265-63 (96906)		EA	8	•	•	•	•	4	18
C PAOZZ	4710-689-3506	TUBE ASSEMBLY, BREATHER: GOVERNOR 5128798 (72582)		EA	4	•	•	•	•	4	19
R KFOZZ		GASKET: BREATHER TUBE 5150900 (72582) (PART OF GASKET SET, FSN 5330-379-4301)		EA	4					4	20
		GROUP 05 - OIL COOLER, ENGINE									
PAOZZ	4730-908-6292	CLAMP, HOSE: OIL COOLER MS35842-14 (96906)		EA	8	•	•	•	•	5	1
MOOZZ		HOSE: OIL COOLER WATER OUTLET ZZM428 (81348) MANUFACTURE FROM:		EA	8					5	2
PCOZZ	4720-277-5026	HOSE, 2 1/4 IN. ID X 4 1/4 IN. REQUIRED FOR EACH HOSE		FT		•	•	•	•	5	
PAOZZ	2930-015-3071	TUBE, WATER INLET: OIL COOLER WATER INLET CONNECTION 5186429 (72582)		EA	2	•	•	•	•	5	3
C PAOZZ	5305-269-3211	SCREW, CAP, HEXAGON HEAD: ELBOW MTG, 3/8-16 THD SIZE, 1 IN. LG MS90725-60 (96906)		EA	4	•	•	•	•	5	4
PAOZZ	5310-637-9541	WASHER, LOCK: ELBOW MTG, 3/8 IN. SCREW SIZE MS35338-46 (96906)		EA	4	•	•	•	•	5	5

(1) SMR CODE	(2) FEDERAL STOCK NUMBER	(3) DESCRIPTION REF NUMBER & MFR CODE	USABLE ON CODE	(4) UNIT OF MEAS	(5) QTY INC IN UNIT	(6) 15-DAY ORGANIZATIONAL MAINTENANCE ALW (a) 1-5	(b) 6-20	(c) 21-30	(d) 31-100	(7) ILLUSTRATION (a) FIG. NO.	
C PAOZZ	2815-902-1882	ELBOW: OIL COOLER WATER INLET CONNECTION 5186316 (72582)		EA	4	•	•	•	•	5	6
KFOZZ		GASKET: OIL COOLER WATER INLET 5167762 (72582) (PART OF KIT, FSN 2930-379-4295)		EA	2					5	7
PAOZZ	4730-908-6292	CLAMP: COOLER TO WATER PUMP HOSE MS35842-14 (96906)		EA	4	•	•	•	•	5	8
KFOZZ		PACKING, PREFORMED: FRESH WATER PUMP 5156770 (72582) (PART OF GASKET SET, FSN 5330-379-4301)		EA	8					5	9
R PAOZZ	5305-269-3216	SCREW, CAP, HEXAGON HEAD: COOLER MTG MS35295-66 (96906)		EA	8	•	•	•	•	5	10
PAOZZ	5310-637-9541	WASHER, LOCK: COOLER MTG, 3/8 IN. SCREW SIZE MS35338-46 (96906)		EA	4	•	•	•	•	5	11
R PCOZZ	5330-842-1900	GASKET: OIL COOLER WATER INLET 5163760 (72582)		EA	2	•	•	•	•	5	12
PAOZZ	4730-785-3863	ELBOW, TUBE: OIL COOLER OUTLET 5186460 (72582)		EA	2	•	•	•	•	5	13
PAOZZ	4820-849-1220	COCK, DRAIN: 1/4 IN. OIL COOLER MS35762-5 (96906)		EA	4	•	•	•	•	5	14
C PAOZZ	5306-226-4844	BOLT, MACHINE, OIL COOLER HOUSING: 5/16-18 THD SIZE, 4 3/4 IN. LG MS90728-51 (96906)		EA	64	•	•	•	•	5	15
C PAOZZ	5310-407-9566	WASHER, LOCK, OIL COOLER HOUSING: 5/16 IN. SCREW SIZE MS35338-45 (96906)		EA	64	•	•	•	•	5	16
C XDOZZ		HOUSING, OIL COOLER, D ENGINE 5186459 (72582)		EA	2					5	
C XDOZZ		HOUSING, OIL COOLER, B ENGINE 5186318 (72582)		EA	2					5	17
KFOZZ		GASKET: OIL COOLER CORE TO HOUSING 5150155 (72582) (PART OF GASKET SET, FSN 5330-379-4301)		EA	12					5	18
PAOZZ	2930-377-2472	CORE ASSEMBLY: 12 PLATE 8502833 (72582)		EA	8	•	•	•	•	5	19
R KFOZZ		GASKET: OIL COOLER, OUTER 5154215 (72582) (PART OF GASKET SET, FSN 5330-379-4301)		EA	12					5	20
R PAOZZ	5305-269-3217	SCREW, CAP, HEXAGON HEAD: ADAPTER MTG, 3/8-16 THD SIZE, 2 1/4 IN. LG MS35295-67 (96906)		EA	4	•	•	•	•	5	21
PAOZZ	5310-637-9541	WASHER, LOCK: ADAPTER MTG, 3/8 IN. SCREW SIZE MS35338-46 (96906)		EA	16	•	•	•	•	5	22
PAOZZ	5310-193-9753	WASHER, FLAT: ADAPTER MTG, 3/8 IN. SCREW SIZE 5226029 (72582)		EA	2	•	•	•	•	5	23
C XDOZZ		ADAPTER, OIL COOLER, B ENGINE 5112991 (72582)		EA	1					5	24
C XDOZZ		ADAPTER, OIL COOLER, D ENGINE 5111901 (72582)		EA	1					5	24
KFOZZ		GASKET: OIL COOLER ADAPTER TO BLOCK 5150154 (72582) (PART OF GASKET SET, FSN 5330-379-4301)		EA	4					5	25
C KFOZZ		WASHER, FLAT: OIL COOLER ADAPTER 5152904 (72582) (PART OF GASKET SET, FSN 5330-379-4301)		EA	4					5	26

	(1) SMR CODE	(2) FEDERAL STOCK NUMBER	(3) DESCRIPTION REF NUMBER & MFR CODE	USABLE ON CODE	(4) UNIT OF MEAS	(5) QTY INC IN UNIT	(6) 15-DAY ORGANIZATIONAL MAINTENANCE ALW (a) 1-5	(b) 6-20	(c) 21-50	(d) 51-100	(7) ILLUSTRATION (a) FIG. NO.	(b) ITEM NO.
R	PAOZZ	5365-289-1578	PLUG, MACHINE THREAD: OIL COOLER VALVE 5177772 (72582)		EA	2	•	•	•	•	5	27
C	NFOZZ		WASHER, FLAT: OIL COOLER PLUG 5202897 (72582) (PART OF GASKET SET, FSN 5330-379-4301)		EA	2					5	28
	PAOZZ	2815-527-2312	SPRING, HELICAL COMPRESSION: OIL COOLER BY-PASS VALVE 5177776 (72582)		EA	2	•	•	•	•	5	29
	PAOZZ	2930-565-5758	VALVE, OIL COOLER BY-PASS 5177777 (72582)		EA	2	•	•	•	•	5	30
	XDOZZ		ELBOW: OIL COOLER TUBE 5123043 (72582)		EA	2					5	
	XDOZZ		ELBOW, PIPE TO TUBE: OIL COOLER WATER OUTLET 5175683 (72582)		EA	2					5	
	PAOZZ	4730-187-4241	PLUG, PIPE: OIL COOLER WATER OUTLET 5409961 (72582)		EA	2	•	•	•	•	5	
	PAOZZ	5305-068-0511	SCREW, CAP, HEXAGON HEAD: OIL COOLER WATER OUTLET ELBOW, 3/8-16 THD SIZE, 1 1/4 IN. LG MS90728-62 (96906)		EA	4	•	•	•	•	5	
	PAOZZ	5310-732-0559	NUT, PLAIN, HEXAGON: OIL COOLER WATER OUTLET ELBOW, 3/8-24 THD SIZE MS51968-8 (96906)		EA	8	•	•	•	•	5	
	PCOZZ	5330-097-3248	GASKET: OIL COOLER WATER OUTLET 5186428 (72582)		EA	2	•	•	•	•	5	
	PCOZZ	2930-379-4295	GASKET KIT, HEAT EXCHANGER 5192637 (72582) (CONSISTS OF)		EA	2	•	•	•	•	5	
			1-GASKET								5	7
			2-GASKET								5	18
			2-GASKET								5	20
			1-GASKET								5	26
			2-GASKET									
			1-GASKET									
			2-SEAL									
			1-GLAND									
R	PAOZZ	4730-277-9683	ELBOW: OIL COOLER HOUSING COVER, 45 DEG 444052 (72582)		EA	1	•	•	•	•		
	PAOZZ	4730-193-7080	ELBOW, STREET: OIL COOLER ADAPTER, 3/4 IN., 45 DEG 119099 (72582)		EA	2	•	•	•	•		
	PAOZZ	4730-246-9188	ELBOW, PIPE: OIL COOLER ADAPTER, 3/4 IN., 90 DEG 119095 (72582)		EA	2	•	•	•	•		
	PAOZZ	4730-188-1893	NIPPLE: OIL COOLER ADAPTER, 3/4 X 2 IN. LG 190717 (72582)		EA	2	•	•	•	•		
	PAOZZ		NIPPLE: OIL COOLER ADAPTER, 3/4 X 2 1/2 IN. LG 190723 (72582)		EA	2	•	•	•	•		
	PAOZZ	4730-011-2578	PLUG, PIPE: HEAT EXCHANGER, WATER INLET TUBE, 1/4 IN. LG 112578 (72582)		EA	2	•	•	•	•		

	(1) SMR CODE	(2) FEDERAL STOCK NUMBER	(3) DESCRIPTION REF NUMBER & MFR CODE	USABLE ON CODE	(4) UNIT OF MEAS	(5) QTY INC IN UNIT	(6) 15-DAY ORGANIZATIONAL MAINTENANCE ALW (a) 1-5	(b) 6-20	(c) 21-50	(d) 51-100	(7) ILLUSTRATION (a) FIG. NO.	(b) ITEM NO.
			GROUP 05 - FUEL FILTER ASSEMBLY									
	PA000	4330-534-2401	FILTER ASSEMBLY, FUEL SECONDARY 5186380 (72582)		EA	4	•	•	•	•	6	
	PA0ZZ	4820-849-1220	COCK, DRAIN, FUEL FILTER: 1/4 IN. MS35782-5 (96906)		EA	8	•	•	•	•	6	1
R	PACZZ	5305-988-1721	SCREW, MACHINE: VENT 131375 (72582)		EA	8	•	•	•	•	6	2
	PCCZZ	5330-491-1498	GASKET: FUEL FILTER VENT SCREW 5193710 (72582)		EA	8	•	•	•	•	6	3
	PACZZ	5310-588-8490	NUT, FILTER COVER 5193694 (72582)		EA	8	•	•	•	•	6	4
	PCCZZ	5330-285-3825	GASKET: FUEL FILTER COVER NUT 2243465 (72582)		EA	8	•	•	•	•	6	5
	PCCZZ	5330-627-4085	GASKET: FUEL FILTER SHELL 5192801 (72582)		EA	8	•	•	•	•	6	7
C	PACZZ	2910-287-1912	ELEMENT, FUEL FILTER MILF20627 (81349)		EA	8	•	•	•	•	6	8
	XDCZZ		GUIDE, ELEMENT 22126 (13800)		EA	8					6	9
	XAOZZ		SEAT, ELEMENT 5186380-1 (72582)		EA	8					6	10
	PCCZZ		GASKET: ELEMENT TO CASE 492619 (72582)		EA	8	•	•	•	•	6	11
	PACZZ	5330-285-3825	WASHER, FLAT: ELEMENT TO CASE		EA	8	•	•	•	•	6	12
	XDCZZ		SPRING, ELEMENT 5186380-2 (72582)		EA	8					6	13
	PACZZ	5305-225-3843	SCREW, CAP, HEXAGON: HANDLE MTG, 1/4-20 THD SIZE, 1 IN. LG MS90728-8 (96906)		EA	4	•	•	•	•	6	14
	PAOZZ	5310-929-6395	WASHER, LOCK: HANDLE MTG, 1/4 IN. SCREW SIZE MS35338-136 (96906)		EA	4	•	•	•	•	6	15
C	PAOZZ	5330-837-4010	WASHER, NONMETALLIC: HANDLE MTG, 1/4 IN. SCREW SIZE		EA	4	•	•	•	•	6	16
C	XDOZZ		HANDLE, FILTER COVER 5193708 (72582)		EA	4					6	17
	XDOZZ		NUT, PLAIN, HEXAGON: FUEL FILTER VALVE 5153709 (72582)		EA	4					6	18
	XAOZZ		VALVE, FLOW CONTROL 5186380-3 (72582)		EA	4					6	19
	PCOZZ	5330-420-9635	PACKING, PREFORMED: RING SEAL 5194048 (72582)		EA	8	•	•	•	•	6	20
	PCOZZ	2910-590-1709	PACKING, PREFORMED: FUEL FILTER VALVE 5193695 (72582)		EA	8	•	•	•	•	6	21
	PAOZZ	4730-278-2962	PLUG, PIPE, COVER: 3/8 IN. AN932UA (88044)		EA	4	•	•	•	•	6	22
	XAOZZ		COVER, FILTER 05166 (13800)		EA	1					6	23
	PAOZZ	5310-732-0559	NUT, PLAIN, HEXAGON: FUEL FILTER MTG, 3/8-24 THD SIZE MS51968-8 (96906)		EA	16	•	•	•	•	6	24
	PAOZZ	5310-637-9541	WASHER, LOCK: FUEL FILTER MTG, 3/8 IN. SCREW SIZE MS35338-46 (96906)		EA	16	•	•	•	•	6	25

(1) SMR CODE	(2) FEDERAL STOCK NUMBER	(3) DESCRIPTION REF NUMBER & MFR CODE / USABLE ON CODE	(4) UNIT OF MEAS	(5) QTY INC IN UNIT	(6) 15-DAY ORGANIZATIONAL MAINTENANCE ALW (a) 1-5	(b) 6-20	(c) 21-50	(d) 51-100	(7) ILLUSTRATION (a) FIG. NO.	(b) ITEM NO.
PAOZZ	5305-269-2805	SCREW, CAP, HEXAGON HEAD: FUEL FILTER MTG, 3/8-24 THD SIZE, 1 1/2 IN. LG MS90726-62 (96906)	EA	16	•	•	•	•	6	26
		GROUP 07 - FUEL STRAINER ASSEMBLY								
PAOOO	2910-421-1539	STRAINER ASSEMBLY, FUEL PRIMARY 5113928 (72582)	EA	2	•	•	•	•	7	
XDOZZ		HANDLE, KNIFE CONTROL 5196639 (72582)	EA	2					7	1
R PAOZZ	5310-660-2649	NUT, JAM: HANDLE MS35690-424 (96906)	EA	4	•	•	•	•	7	2
XDOZZ		NUT, PACKING 17771 (81321)	EA	4					7	3
XDOZZ		GLAND, PACKING 11069 (81321)	EA	4					7	4
R PCOZZ	5330-285-7384	PACKING 17433 (81321)	EA	4	•	•	•	•	7	5
XDOZZ		ADAPTER, PACKING GLAND 17763 (81321)	EA	4					7	6
PAOZZ	2910-424-7431	VALVE, VENT 15002 (81321)	EA	1	•	•	•	•	7	7
PACZZ	4730-187-4191	PLUG, PIPE: 1/2 IN. 103868 (72582)	EA	2	•	•	•	•	7	8
PACZZ		PLUG, PIPE: COVER 21296 (81321)	EA	4	•	•	•	•	7	9
PACZZ		PLUG, DRAIN 5196640 (72582)	EA	4	•	•	•	•	7	10
PCCZZ	5330-369-2674	GASKET: PLUG 694203 (72582)	EA	4	•	•	•	•	7	11
PACZZ	2910-421-1540	RING, CLAMPING 5193698 (72582)	EA	4	•	•	•	•	7	12
XAOZZ		SHELL 5193697 (72582)	EA	4					7	13
PCCZZ	5330-599-4823	WASHER, NONMETALLIC: COVER 5193704 (72582)	EA	4	•	•	•	•	7	14
PACZZ	2910-420-8919	ELEMENT AND KNIFE ASSEMBLY 5196638 (72582)	EA	4	•	•	•	•	7	15
XDCZZ		HANDLE, FLOW CONTROL 5193707 (72582)	EA	2					7	16
R PAOZZ	5310-853-9335	NUT, PLAIN, HEXAGON: FLOW CONTROL VALVE MS35691-525 (96906)	EA	4	•	•	•	•	7	17
XBOZZ		RETAINER, PACKING REGULATOR VALVE 5193705 (72582)	EA	2					7	18
PCOZZ	5330-323-9156	PACKING, PREFORMED: REGULATOR VALVE 3230393 (72582)	EA	2	•	•	•	•	7	19
PAOZZ	4330-786-1781	VALVE, REGULATOR 5195702 (72582)	EA	2	•	•	•	•	7	20
XAOZZ		COVER 5196636 (72582)	EA	2					7	21
PAOZZ	5305-071-1767	SCREW, CAP, HEXAGON HEAD: BRACKET MTG, 1/2-13 THD SIZE, 1 1/8 IN. LG MS90725-110 (96906)	EA	8	•	•	•	•	7	22

	(1) SMR CODE	(2) FEDERAL STOCK NUMBER	(3) DESCRIPTION REF NUMBER & MFR CODE	USABLE ON CODE	(4) UNIT OF MEAS	(5) QTY INC IN UNIT	(6) 15-DAY ORGANIZATIONAL MAINTENANCE ALW (a) 1-5	(b) 6-20	(c) 21-50	(d) 51-100	(7) ILLUSTRATION (a) FIG. NO.	(b) ITEM NO.
	PAOZZ	5310-584-5272	WASHER, LOCK: BRACKET MTG, 1/2 IN. SCREW SIZE MS35338-48 (96906)		EA	16	•	•	•	•	7	23
	XDOZZ		BRACKET, FUEL STRAINER MOUNTING 5186396 (72582)		EA	2					7	24
	PAOZZ	5310-637-9541	WASHER, LOCK: STRAINER TO BRACKET, 3/8 IN. SCREW SIZE MS35338-46 (96906)		EA	8	•	•	•	•	7	
	PAOZZ	5305-269-2804	SCREW, CAP, HEXAGON HEAD: STRAINER TO BRACKET, 3/8-24 THD SIZE, 1 1/8 IN. LG 181365 (72582)		EA	4	•	•	•	•	7	
	PAOZZ	5310-732-0559	NUT, PLAIN, HEXAGON: STRAINER TO BRACKET, 3/8-24 THD SIZE MS51968-8 (96906)		EA	4	•	•	•	•	7	
	PAOZZ	5305-269-3211	SCREW, CAP, HEXAGON HEAD: 3/8-16 THD SIZE, 1 IN. LG MS90725-60 (96906)		EA	4	•	•	•	•	7	
			GROUP 08 - FUEL STRAINER, LINE									
	PAOOO	2910-235-4313	STRAINER, FUEL: TYPE D-15J 18143 (81321)	A	EA	2	•	•	•	•	8	
R	XDOZZ		HANDLE ASSEMBLY 14113-1 (81321)	A	EA	1					8	1
C	PAOZZ	5310-660-2649	NUT, JAM: 1/4-28 THD SIZE MS35690-424 (96906)	A	EA	1	•	•	•	•	8	2
	PAOZZ	4730-028-3890	NUT, STUFFING BOX 17771 (81321)	A	EA	1	•	•	•	•	8	3
R	XDOZZ		GLAND, PACKING, STUFFING BOX 11069 (81321)	A	EA	1					8	4
	PCOZZ	5330-285-7384	PACKING, STUFFING BOX 17433 (81321)	A	EA	1	•	•	•	•	8	5
C	XDOZZ		ADAPTER 17783 (81321)	A	EA	1					8	6
	PAOZZ	2910-424-7431	VALVE, VENT 15002 (81321)	A	EA	2	•	•	•	•	8	7
	PCOZZ	5330-141-7875	GASKET: VENT CHAMBER 20969 (81321)	A	EA	1	•	•	•	•	8	8
R	PACZZ	5365-202-8946	PLUG, FILLER 7335 (81321)	A	EA	1	•	•	•	•	8	9
	PCCZZ	5330-599-5433	GASKET: FILLER PLUG 7494 (81321)	A	EA	1	•	•	•	•	8	10
	PACZZ	4330-415-1622	PLUG ASSEMBLY, DRAIN 13566 (81321)	A	EA	1	•	•	•	•	8	11
R	PCCZZ	5330-522-5340	GASKET: DRAIN PLUG 11217 (81321)	A	EA	1	•	•	•	•	8	12
	PACZZ	4330-708-9944	RING ASSEMBLY, CLAMPING 14797 (81321)	A	EA	1	•	•	•	•	8	13
	XAOZZ		CASE ASSEMBLY 14614 (81321)	A	EA	1					8	14
R	PCCZZ	5330-328-9857	GASKET: CASE 13291 (81321)	A	EA	1	•	•	•	•	8	15
	PACZZ	2940-328-8458	ELEMENT AND KNIFE ASSEMBLY 16622 (81321)	A	EA	1	•	•	•	•	8	16
	XAOZZ		HEAD 18142 (81321)	A	EA	1					8	17

	(1) SMR CODE	(2) FEDERAL STOCK NUMBER	(3) DESCRIPTION REF NUMBER & MFR CODE	USABLE ON CODE	(4) UNIT OF MEAS	(5) QTY INC IN UNIT	(6) 15-DAY ORGANIZATIONAL MAINTENANCE ALW (a) 1-5	(b) 6-20	(c) 21-50	(d) 51-100	(7) ILLUSTRATION (a) FIG. NO.	(b) ITEM NO.
N	PA000		FILTER PRIMARY: MODEL G190J-39-3 63108-3 (81321)	C	EA	2	•	•	•	•	9	
N	PACZZ		PLUG, PIPE 8901 (81321)	C	EA	1	•	•	•	•	9	1
N	XDOZZ		HANDLE ASSEMBLY 14113-1 (81321)	C	EA	1					9	2
N	PAOZZ	5310-660-2649	NUT, JAM: 1/4-28 UNF MS35690-424 (96906)	C	EA	1	•	•	•	•	9	3
N	PAOZZ	4730-028-3890	NUT, STUFFING BOX 17771 (81321)	C	EA	1	•	•	•	•	9	4
N	PAOZZ	5330-361-9569	GLAND, STUFFING BOX 11069 (81321)	C	EA	1	•	•	•	•	9	5
N	PCOZZ	5330-285-7384	PACKING, STUFFING BOX 17433 (81321)	C	EA	1	•	•	•	•	9	6
N	XDOZZ		STUFFING BOX AND SPRING ASSEMBLY 17783 (81321)	C	EA	1					9	7
N	XAOZZ		CASE ASSEMBLY 6668337 (81321)	C	EA	1					9	8
N	PACZZ	2940-499-1689	ELEMENT KNIFE: .003 SPACING 63103-3 (81321)	C	EA	1	•	•	•	•	9	9
N	PACZZ	4330-028-3885	CLAMPING RING ASSEMBLY 14798 (81321)	C	EA	1	•	•	•	•	9	10
N	PCCZZ	5330-291-9288	GASKET CASE 21016 (81321)	C	EA	1	•	•	•	•	9	11
N	XAOZZ		HEAD FILTER 29777-2 (81321)	C	EA	1					9	12
			GROUP 09 - FUEL PIPING									
	HOOZZ		HOSE ASSEMBLY, FUEL: TANK LINE TO STRAINER MMC1F9 (01276) MANUFACTURE FROM:	A	EA	1					10	1
	PCOZZ	4720-067-0453	HOSE, AS REQUIRED		FT		•	•	•	•	10	
	PAOZZ		FITTING, 1 REQUIRED 4412-6-8 (01276)		EA		•	•	•	•	10	
	PAOZZ	4730-879-5398	FITTING, 1 REQUIRED 4412-6-8 (01276)		EA		•	•	•	•	10	
	HOOZZ		HOSE ASSEMBLY, TANK LINE TO STRAINER 19-8-211 (26571) MANUFACTURE FROM:	B	EA	1					10	1
	PCOZZ		HOSE, AS REQUIRED 211-9 (03925)		FT		•	•	•	•	10	
	PAOZZ		NUT, 2 REQUIRED 323-8S (03925)		EA		•	•	•	•	10	
	PAOZZ		FITTING, 2 REQUIRED 326-8-6S (03925)		EA		•	•	•	•	10	
	PAOZZ	4730-014-2435	NUT, TUBE, INVERTED FLARE: 1/2 IN., BRASS 10008 (79470)	AB	EA	12	•	•	•	•	10	2
	PAOZZ		TUBE, FUEL DRAIN: 41 11/16 IN. LG, RD ENGINE, STARBOARD POWER UNIT 5128981 (72582)	AB	EA	1	•	•	•	•	10	3
	PAOZZ		TUBE, FUEL DRAIN: 43 1/4 IN. LG, RB ENGINE, STARBOARD POWER UNIT 5128983 (72582)	AB	EA	1	•	•	•	•	10	3

(1) SMR CODE	(2) FEDERAL STOCK NUMBER	(3) DESCRIPTION REF NUMBER & MFR CODE	USABLE ON CODE	(4) UNIT OF MEAS	(5) QTY INC IN UNIT	(6) 15-DAY ORGANIZATIONAL MAINTENANCE ALW (a) 1-5	(b) 6-20	(c) 21-50	(d) 51-100	(7) ILLUSTRATION (a) FIG. NO.	(b) ITEM NO.
PAOZZ		TUBE, FUEL DRAIN: 41 11/16 IN. LG, LD ENGINE, PORT POWER UNIT 5128985 (72582)	AB	EA	1	•	•	•	•	10	3
PAOZZ		TUBE, FUEL DRAIN: 43 1/4 IN. LG, LB ENGINE, PORT POWER UNIT 5128984 (72582)	AB	EA	1	•	•	•	•	10	3
PCOZZ	4720-426-2935	HOSE ASSEMBLY, FUEL STRAINER TO PUMP: RD AND LD ENGINE 5136986 (72582)	AB	EA	2	•	•	•	•	10	4
PCOZZ	4720-436-2937	HOSE ASSEMBLY, FUEL STRAINER TO PUMP: RB AND LB ENGINE 5136077 (72582)	AB	EA	2	•	•	•	•	10	5
PAOZZ		TUBE, FILTER TO CYLINDER HEAD: RD AND LD ENGINE, 61 1/2 IN. LG 5128977 (72582)	AB	EA	1	•	•	•	•	10	6
PAOZZ		TUBE, FILTER TO CYLINDER HEAD: RB AND LB ENGINE, 61 1/2 IN. LG 5128976 (72582)	AB	EA	1	•	•	•	•	10	6
PAOZZ	2910-511-3434	TUBE, FUEL PUMP TO FILTER: RB AND LB ENGINE, 12 3/4 IN. LG 5186439 (72582)	AB	EA	2	•	•	•	•	10	7
PAOZZ	2910-511-3436	TUBE, FUEL PUMP TO FILTER: RD AND LD ENGINE, 12 3/4 IN. LG 5186440 (72582)		EA	2	•	•	•	•	10	7
PAOZZ		COUPLING, PIPE SWIVEL: 90 DEG, 1/2 IN. 2047-8-8S (01276)		EA	4	•	•	•	•	10	8
PAOZZ		ADAPTER, STRAIGHT, FEMALE: 1/2 IN. TUBE, 3/4 IN. PIPE BRASS 252-8 (79470)		EA	4	•	•	•	•	10	9
PAOZZ		ADAPTER, STRAIGHT, MALE: 3/4 IN. TUBE, 1/2 IN. PIPE 48-12A12-12 (79470)		EA	4	•	•	•	•	10	10
PAOZZ		ADAPTER, STRAIGHT 238-8 (79470)		EA	4	•	•	•	•	10	11
PAOZZ		VALVE, ANGLE 752 (31998)	A	EA	4	•	•	•	•	10	12
PAOZZ	4820-959-7298	VALVE, RELIEF: 2 PSI 2606 (14959)	A	EA	1	•	•	•	•	10	13
PAOZZ	4730-888-6933	ELBOW, STREET: STRAINER INLET 137694 (72582)		EA	4	•	•	•	•	10	14
XDOZZ		WRENCH, FUEL CAP GUN20-26-27-28 (26571)	B	EA	1					10	15
PAOZZ		CAP, FUEL FILLING, VENTED MHCA1F4 (98042)	A	EA	2	•	•	•	•	10	16
PAOZZ		CAP, FUEL TANK, VENTED GUN20-29 (26571)	B	EA	2	•	•	•	•	10	16
MOOZZ		GASKET: FUEL CAP MHCA1N4 (98042) MANUFACTURE FROM:	A	EA	1					10	17
PCOZZ	5330-261-5761	GASKET, AS REQUIRED MH8156CLASS8 (81348)		SH		•	•	•	•	10	
PAOZZ	4730-908-6893	CLAMP, HOSE: 3 9/16 IN. M35042-15 (96906)		EA	2	•	•	•	•	10	18
MOOZZ		HOSE, RUBBER MHCA1M2 (98042) MANUFACTURE FROM:		EA	1					10	19
PCOZZ	4720-288-9756	HOSE, AS REQUIRED, 2.875 IN. ID, 3.250 IN. OD ZZHA28 (81348)		FT		•	•	•	•	10	

	(1) SMR CODE	(2) FEDERAL STOCK NUMBER	(3) DESCRIPTION REF NUMBER & MFR CODE	USABLE ON CODE	(4) UNIT OF MEAS	(5) QTY INC IN UNIT	(6) 15-DAY ORGANIZATIONAL MAINTENANCE ALW (a) 1-5	(b) 6-20	(c) 21-50	(d) 51-100	(7) ILLUSTRATION (a) FIG. NO.	(b) ITEM NO.
	XDOZZ		KEEPER CHAIN, FUEL TANK CAP GUN20-32 (26571)		EA	2					10	20
	MOOZZ		CHAIN, JACK MAC4105 (82021) MANUFACTURE FROM:		FT	2					10	21
	PAOZZ	4010-228-9957	CHAIN, DOUBLE JACK, .105 IN. SIZE, AS REQUIRED RRC271CLASS8 (81348)		FT		•	•	•	•	10	
	MOOZZ		GASKET: FUEL CAP ADAPTER MANUFACTURE FROM:		EA	1					10	22
	PCOZZ	5330-261-5761	GASKET, AS REQUIRED MMG156 (81348)		SH		•	•	•	•	10	
	PAOZZ	2910-459-6696	CAP, VENT: TANK VENT TUBE 155-3-4IN (41582)		EA	2	•	•	•	•	10	23
N	PAOZZ	2910-477-6802	PLUG: FILL AND VENT, FUEL TANK, 2 1/2-8 THD SIZE 210-45109A4-29 (80064)	C	EA	2	•	•	•	•	11	1
N	MOOZZ		GASKET NEOPRENE: FUEL TANK CAP 210-45109A4-33 (80064) MANUFACTURE FROM:	C	EA	2					11	2
N	PCOZZ	5330-261-5761	GASKET NEOPRENE, FUEL TANK FILL CAP, 1/8 IN. THK, AS REQUIRED MMG156 (81348)		SH		•	•	•	•	11	
N	MOOZZ		STAPLE: FUEL TANK CAP CHAIN 210-45109A4-40 (80064) MANUFACTURE FROM:	C	EA	2					11	3
N	PAOZZ	9530-228-9231	ROD, BRASS, 3/16 IN. DIA, AS REQUIRED QQB637 (81348)		FT		•	•	•	•	11	
N	MOOZZ		CHAIN, DOUBLE JACK: .105 IN. SIZE 210-45109A4-31 (80064) MANUFACTURE FROM:	C	EA	2					11	4
N	PAOZZ	4010-228-9957	CHAIN, DOUBLE JACK, .105 IN. SIZE, AS REQUIRED RRC271CLASS8 (81348)		FT		•	•	•	•	11	
N	PAOZZ	4730-908-6292	CLAMP, HOSE: 3 1/2 IN. MS35842-14 (96906)	C	EA	8	•	•	•	•	11	5
N	MOOZZ		HOSE, MEDIUM, PRESSURE 210-45109A4-35 (80064) MANUFACTURE FROM:	C	EA	2					11	6
N	PCOZZ	4720-949-0457	HOSE, W/STATIC WIRE, MEDIUM, PRESSURE, 2 1/2 IN. ID, AS REQUIRED 24MB (24161)		FT		•	•	•	•	11	
N	PAOZZ		NIPPLE, PIPE TO HOSE: FUEL TANK FILL, 2 1/2-8 THD SIZE STYLEKS (72661)	C	EA	2	•	•	•	•	11	7
N	PAOZZ		COUPLING PIPE: FUEL TANK FILL PIPE, 2 1/2-8 THD SIZE 2117-21-2IN (26403)	C	EA	2	•	•	•	•	11	8
	PAOZZ		NIPPLE, PIPE TO HOSE: FUEL TANK FILL, 2 1/2-8 THD SIZE STYLEKS (72661)	C	EA	2	•	•	•	•	11	9
N	MOOZZ		SCREEN, BRONZE 210-45109A4-51 (80064) MANUFACTURE FROM:	C	EA	2					11	10
N	PAOZZ	5335-231-1203	SCREEN, BRONZE, 16 X 16 MESH, .018 IN. WIRE, AS REQUIRED RRW360 (81348)		FT		•	•	•	•	11	

	(1) SMR CODE	(2) FEDERAL STOCK NUMBER	(3) DESCRIPTION REF NUMBER & MFR CODE	USABLE ON CODE	(4) UNIT OF MEAS	(5) QTY INC IN UNIT	(6) 15-DAY ORGANIZATIONAL MAINTENANCE ALW (a) 1-5	(b) 6-20	(c) 21-50	(d) 51-100	(7) ILLUSTRATION (a) FIG. NO.	(b) ITEM NO.
N	PAOZZ	4730-194-0219	BUSHING, HEXAGON: 3/4 IN. AN912-8STD (81349)	C	EA	2	•	•	•	•	11	11
N	PAOZZ	4730-908-3193	CLAMP, HOSE MS35842-12 (96906)	C	EA	8	•	•	•	•	11	12
N	MOOZZ		HOSE, FUEL 210-4510944-16 (80064) MANUFACTURE FROM:	C	EA	2					11	13
N	PCOZZ	4720-106-6992	HOSE, FUEL, 1 IN. ID, AS REQUIRED RBL1-100 (01276)		FT		•	•	•	•	11	
N	PAOZZ	4730-196-2002	NIPPLE, PIPE, BRASS: 3/4 X 4 IN. LG WWN351TYPE1 (81348)	C	EA	2	•	•	•	•	11	14
N	PAOZZ	4730-057-8113	ELBOW: BRASS, 90 DEG, 3/4-14 THD SIZE 1211-3-4IN (26403)	C	EA	1	•	•	•	•	11	15
N	MOOZZ		PIPE, COPPER: 3/4 IN. IPS STD W 210-4510944-20 (80064) MANUFACTURE FROM:	C	EA	1					11	16
N	PAOZZ		PIPE, COPPER, TYPE W, 3/4 IN., AS REQUIRED 210-4510944-20 (80064)		FT		•	•	•	•	11	
N	PAOZZ	4730-203-0311	BEND RETURN, BRASS: 3/4 IN. MILF1181 (81349)	C	EA	2	•	•	•	•	11	17
N	PAOZZ		ELBOW, UNION: FUEL TANK OUTLET, FEMALE, 90 DEG, 3/4-14 THD SIZE 453 (26403)	C	EA	5	•	•	•	•	11	18
N	PAOZZ		COUPLING COMPRESSION: 3/4 IN., 5 IN. LONG 210 (34749)	C	EA	5	•	•	•	•	11	19
N	PAOZZ	4730-939-6247	ELBOW, MALE, BRASS: 3/4 IN. TUBE TO 3/4 IN. PIPE 49X12X12 (79470)	C	EA	2	•	•	•	•	11	20
N	PAOZZ	4730-384-0275	UNION: ENGINE FUEL BRASS, 3/4-14 THD SIZE 42X12 (88334)	C	EA	2	•	•	•	•	11	21
N	PAOZZ		VALVE RELIEF: BRONZE, 3/4-14 THD SIZE, SET AT 2 PSI 286-3-4IN (37239)	C	EA	1	•	•	•	•	11	22
N	PAOZZ		VALVE ANGLE: FUEL TANK OUTLET, BRONZE, 3/4-14 THD SIZE 246 (63686)	C	EA	2	•	•	•	•	11	23
N	PAOZZ	4730-193-2715	NIPPLE, PIPE: BRASS, 3/4-14 THD SIZE, 2 IN. LG WWT351TYPE1 (81348)	C	EA	6	•	•	•	•	11	24
N	MOOZZ		TUBE, COPPER 210-4510944-13 (80064) MANUFACTURE FROM:	C	EA	1					11	25
N	PAOZZ	4710-277-4534	TUBE, COPPER, TYPE K, BENDABLE, 5/8 IN. OD, AS REQUIRED WWT799TYPEK (81348)		FT		•	•	•	•	11	
N	PAOZZ	4730-288-9907	CONNECTOR, MALE: FUEL RETURN LINE, 1/2-14 THD SIZE 48X10 (88334)	C	EA	2	•	•	•	•	11	26
N	PAOZZ		TEE, REDUCING: 3/4 X 1/2 X 3/4 3-4INX1-2INX3-4IN (14959)	C	EA	2	•	•	•	•	11	27
N	PAOZZ	4730-254-6238	TEE: 3/4 IN. SCREWED, BRASS, FUEL TANK OUTLET WWP460CLASSA (81348)	C	EA	3	•	•	•	•	11	28
N	PAOZZ	4730-497-1709	CONNECTOR, MALE: 3/4-14 THD SIZE 48X12X12 (79470)	C	EA	4	•	•	•	•	11	29

	(1) SMR CODE	(2) FEDERAL STOCK NUMBER	(3) DESCRIPTION REF NUMBER & MFR CODE	USABLE ON CODE	(4) UNIT OF MEAS	(5) QTY INC IN UNIT	(6) 15-DAY ORGANIZATIONAL MAINTENANCE ALW (a) 1-5	(b) 6-20	(c) 21-50	(d) 51-100	(7) ILLUSTRATION (a) FIG. NO.	(b) ITEM NO.
N	MOOZZ		TUBE, COPPER 210-4510944-12 (80064) MANUFACTURE FROM:	C	EA	1					11	30
N	PAOZZ	4710-277-7748	TUBE, COPPER, TYPE K, BENDABLE, 3/4 IN. OD, AS REQUIRED WWT799 (81348)		FT		•	•	•	•	11	
	PAOZZ		NUT, LONG, FLARE, 3/4 IN., AS REQUIRED 1611X12 (79470)		EA		•	•	•	•	11	
	PAOZZ		VALVE, ANGLE: TANK DRAIN, BRONZE, 3/4-14 THD SIZE 246 (63686)	C	EA	2	•	•	•	•	12	1
N	PAOZZ	4730-196-2002	NIPPLE, PIPE: BRASS, 3/4-14 THD SIZE, 4 IN. LG WWN351 (81348)	C	EA	2	•	•	•	•	12	2
	PAOZZ		ELBOW, UNION: FUEL TANK DRAIN, FEMALE, 90 DEG, 3/4-14 THD SIZE 453 (26403)	C	EA	4	•	•	•	•	12	3
	MOOZZ		PIPE, COPPER 210-4510944-20 (80064) MANUFACTURE FROM:	C	EA	3					12	4
	PAOZZ	4710-277-6068	TUBE, COPPER, TYPE N, 3/4 IN., AS REQUIRED WWP377 (81348)		FT		•	•	•	•	12	
	PAOZZ	4730-254-6238	TEE: 3/4 IN. SCREWED BRASS, FUEL TANK TO STRAINER WWP460CLASSA (81348)	C	EA	1	•	•	•	•	12	5
N	PAOZZ		UNION: BRASS, 3/4-14 THD SIZE 489 (26403)	C	EA	1	•	•	•	•	12	6
N	PAOZZ	2910-494-3013	BLOCK, FUEL JUNCTION 5109211 (72582)	C	EA	1	•	•	•	•		
N	PAOZZ	2910-364-3452	TUBE ASSEMBLY: METAL, FUEL MANIFOLD CYLINDER HEAD TO INJECTOR INLET AND OUTLET 5151121 (72582)	C	EA	24	•	•	•	•		
N	XDOZZ		PLATE, FUEL JUNCTION 5145421 (72582)	C	EA	1						
N	PAOZZ	5306-021-2546	BOLT, FUEL JUNCTION, PLATE 215510 (72582)	C	EA	2	•	•	•	•		
N	PAOZZ	5305-269-2811	BOLT, FUEL JUNCTION BLOCK MB90726-67 (96906)	C	EA	2	•	•	•	•		
N	PAOZZ	5310-637-9541	WASHER, LOCK: 3/8 IN. MB35338-46 (72582)	C	EA	7	•	•	•	•		
N	PAOZZ	5310-732-0559	NUT, PLAIN, HEXAGON: CADMIUM PLATED, 3/8-24 THD SIZE MS51967-8 (96906)	C	EA	2	•	•	•	•		
N	PCOZZ	4720-494-1740	HOSE, JUNCTION BLOCK TO FUEL PUMP 5132452 (72582)	C	EA	1	•	•	•	•		
N	PAOZZ	4730-837-0816	NIPPLE, PIPE: 3/8 X 1 1/2 IN. LG 144606 (72582)	C	EA	1	•	•	•	•		
N	PAOZZ		VALVE, FUEL SHUTOFF 5138918 (72582)	C	EA	2	•	•	•	•		
N	PAOZZ	4730-882-8622	ELBOW: 90 DEG, 1/2 IN. TUBE, 3/8-18 THD SIZE 142647 (72582)	C	EA	1	•	•	•	•		
N	XDOZZ		BRACKET CLIP 5188248 (72582)	C	EA	5						
N	PAOZZ	5340-282-7509	CLIP, JUNCTION BLOCK TO PUMP HOSE MS21333-62 (96906)	C	EA	5	•	•	•	•		

(1) SMR CODE	(2) FEDERAL STOCK NUMBER	(3) DESCRIPTION REF NUMBER & MFR CODE	USABLE ON CODE	(4) UNIT OF MEAS	(5) QTY INC IN UNIT	(6) 15-DAY ORGANIZATIONAL MAINTENANCE ALW (a) 1-5	(b) 6-20	(c) 21-50	(d) 51-100	(7) ILLUSTRATION (a) FIG. NO.	(b) ITEM NO.
N PAOZZ	5305-269-3210	BOLT, CLIP TO BRACKET MS90725-59 (96906)	C	EA	5	•	•	•	•		
N PAOZZ	5310-011-7062	NUT, PLAIN, HEXAGON: 3/8-16 THD SIZE 117062 (72582)	C	EA	5	•	•	•	•		
N PCOZZ	4720-557-8330	HOSE, JUNCTION BLOCK TO FUEL PUMP, 45 IN. LG 5136987 (72582)	C	EA	1	•	•	•	•		
N PAOZZ	4730-837-0816	NIPPLE: 3/8 X 1 1/2 IN. 144606 (72582)	C	EA	1	•	•	•	•		
N PCOZZ	4720-557-8339	HOSE, FUEL PUMP TO FILTER: 5/16 IN. ID X 12 IN. LG 5130939 (72582)	C	EA	2	•	•	•	•		
N PAOZZ	4730-639-9676	ELBOW: 90 DEG, 3/8 IN. TUBE, 1/4 IN. PIPE 118755 (72582)	C	EA	2	•	•	•	•		
N PAOZZ	4730-595-4417	ELBOW, STREET: 1/4 IN. NPT, 90 DEG 190367 (72582)	C	EA	2	•	•	•	•		
N PCOZZ	2990-010-0880	HOSE, FUEL RETURN: 5/16 IN. DIA X 34 1/2 IN. LG 5132613 (72582)	C	EA	2	•	•	•	•		
N PAOZZ	4730-595-4417	ELBOW, STREET: 1/4 IN. NPT, 90 DEG 190367 (72582)	C	EA	2	•	•	•	•		
N PAOZZ	2815-938-5760	COOLER, FUEL OIL 5136348 (72582)	C	EA	2	•	•	•	•		
N PAOZZ	4820-051-7319	VALVE, FUEL CHECK: 1/4 IN. SWING 5174924 (72582)	C	EA	2	•	•	•	•		
N PAOZZ	4730-278-0158	ELBOW: 45 DEG, 5/16 IN. TUBE, 1/4 IN. PIPE 143337 (72582)	C	EA	2	•	•	•	•		
N PAOZZ	4730-720-3170	ADAPTER RESTRICTED: .080 ORIFICE 5129844 (72582)	C	EA	2	•	•	•	•		
N PAOZZ	4730-014-3343	ELBOW: 90 DEG, 5/16 IN. TUBE TO 1/4-18 PIPE 143343 (72582)	C	EA	2	•	•	•	•		
N PAOZZ	5340-158-0417	CLIP, FUEL RETURN HOSE 5109020 (72582)	C	EA	1	•	•	•	•		
N PAOZZ	5340-720-6213	CLIP, FUEL RETURN HOSE MS21333-59 (96906)	C	EA	1	•	•	•	•		
N PCOZZ	4720-557-8363	HOSE, FUEL SUPPLY, FILTER TO CYLINDER HEAD: 3/8 X 47 IN. LG 5143294 (72582)	C	EA	2	•	•	•	•		
N PAOZZ	4730-277-8274	ELBOW: 90 DEG, 1/4-18 X 3/8 IN. TUBE 137423 (72582)	C	EA	4	•	•	•	•		
N PAOZZ	4730-499-3597	CLIP, FUEL SUPPLY HOSE 5177509 (72582)	C	EA	4	•	•	•	•		
N PCOZZ	4720-557-8570	HOSE, FUEL STRAINER: 1/2 X 19 7/8 IN. LONG 5109830 (72582)	C	EA	1	•	•	•	•		
N PCOZZ	4720-557-9363	HOSE, FUEL STRAINER: 5/8 X 17 3/4 IN. LONG 5120684 (72582)	C	EA	1	•	•	•	•		
N XDOZZ		HANGER, SINGLE CABLE: FUEL PIPE SUPPORT SL0106TXL (85105)	C	EA	20						
N PAOZZ	4730-461-3639	NUT, FLARE, TUBE: 5/8 IN. 1110X10 (88334)	C	EA	4	•	•	•	•		
N PAOZZ	4730-277-3874	UNION: 5/8 IN. 42X10 (88334)	C	EA	2	•	•	•	•		

	(1) SMR CODE	(2) FEDERAL STOCK NUMBER	(3) DESCRIPTION REF NUMBER & MFR CODE	USABLE ON CODE	(4) UNIT OF MEAS	(5) QTY INC IN UNIT	(6) 15-DAY ORGANIZATIONAL MAINTENANCE ALW (a) 1-5	(b) 6-20	(c) 21-50	(d) 51-100	(7) ILLUSTRATION (a) FIG. NO.	(b) ITEM NO.
N	PAOZZ	4730-014-4309	NUT, FLARE, TUBE: 3/4 IN. 1110X12 (88334)	C	EA	8	•	•	•	•		
N	PAOZZ	4730-187-4228	PLUG, PIPE: TYPE 3, SQUARE HEAD, 3/4-14 THD SIZE WP471 (81348)	C	EA	2	•	•	•	•		
N	MOOZZ		KEEPER CHAIN: 3/16 IN. DIA, BRASS, 4 1/2 IN. LG 210-45109A4-32 (80064) MANUFACTURE FROM:	C	EA	2						
N	PAOZZ	9530-228-5231	ROD, BRASS, 3/16 IN. DIA, AS REQUIRED QQB637 (81348)		FT		•	•	•	•		
N	PACZZ	5120-712-0517	WRENCH, DIESEL FUEL FILLING CAP 210-45109A4PC25 (80064)	C	EA	1	•	•	•	•		
N	PAOZZ	5307-003-0710	STUD: FUEL PIPE SUPPORT, 3/8 X 3/4 IN. LG 101-010-110 (85105)	C	EA	12	•	•	•	•		
N	PAOZZ	5307-003-0711	STUD: FUEL PIPE SUPPORT, 3/8 X 1 IN. LG 101-017-208 (85105)	C	EA	8	•	•	•	•		
N	PAOZZ		HANGER, SINGLE CABLE: FUEL PIPE SUPPORT, A-900 NEOPRENE COATED SL0106TXL (85105)	C	EA	20	•	•	•	•		
	MOOZZ		HOSE ASSEMBLY 19-10-211 (26571) MANUFACTURE FROM:	B	EA	1						
	PCOZZ	4720-067-0454	HOSE, AS REQUIRED		FT		•	•	•	•		
	PAOZZ		NUT, SWIVEL, 2 REQUIRED 328-8-68 (03925)		EA		•	•	•	•		
	PAOZZ		FITTING, HOSE END, 1 REQUIRED 323-8-88 (03925)		EA		•	•	•	•		
	PAOZZ		ADAPTER, 1/2 IN. TUBE TO 1/2 IN. MALE PIPE, 1 REQUIRED 48-8-8 (03925)		EA		•	•	•	•		
	PAOZZ		NUT, FLARE, 1/2 IN., 1 REQUIRED 111008 (03925)		EA		•	•	•	•		
	PAOZZ	2910-511-3432	TUBE ASSEMBLY, STRAINER OUTLET TO FUEL PUMP 5186417 (72582)		EA	2	•	•	•	•		
	PAOZZ	4730-019-4634	ELBOW, TUBE: 45 DEG, FUEL STRAINER TUBE 143340 (72582)		EA	2	•	•	•	•		
	PAOZZ		ADAPTER, REDUCER: FUEL STRAINER TUBE 3304086 (72582)	AB	EA	4	•	•	•	•		
	PAOZZ	4730-013-7409	ADAPTER, STRAIGHT: FUEL STRAINER TUBE 137409 (72582)		EA	4	•	•	•	•		
	XDOZZ		CLIP, PRIMARY FILTER TO FUEL PUMP 3291251 (72582)	AB	EA	4						
	XDOZZ		CLIP, PRIMARY FILTER TO FUEL PUMP TUBE 3290076 (72582)	AB	EA	4						
	PAOZZ	5310-407-9566	WASHER, LOCK: TUBE CLIP, 5/16 IN. SCREW SIZE MS35338-45 (96906)	AB	EA	4	•	•	•	•		
R	PAOZZ	4730-187-1417	BUSHING, PIPE: FUEL PUMP TUBE, 1/2 X 1/4 IN. 116524 (72582)	AB	EA	4	•	•	•	•		
	PAOZZ	4730-203-9058	ELBOW, PIPE TO TUBE: FUEL PUMP TUBE, 3/8 IN. TUBE 90 DEG 5179965 (72582)	AB	EA	4	•	•	•	•		

(1) SMR CODE	(2) FEDERAL STOCK NUMBER	(3) DESCRIPTION REF NUMBER & MFR CODE	USABLE ON CODE	(4) UNIT OF MEAS	(5) QTY INC IN UNIT	(6) 15-DAY ORGANIZATIONAL MAINTENANCE ALW (a) 1-5	(b) 6-20	(c) 21-50	(d) 51-100	(7) ILLUSTRATION (a) FIG. NO.	(b) ITEM NO.
PAOZZ	4730-740-2580	ADAPTER, STRAIGHT: 3/8 IN. FUEL PUMP TUBE 5179936 (72582)	AB	EA	4	•	•	•	•		
PAOZZ	5310-261-7766	WASHER, LOCK: NO. 10 TUBE CLIP 120217 (72582)	AB	EA	2	•	•	•	•		
PAOZZ	5310-009-9162	NUT, PLAIN, HEXAGON: TUBE CLIP, 10-24 THD SIZE 110633 (72582)	AB	EA	2	•	•	•	•		
PAOZZ	2910-511-3443	TUBE ASSEMBLY, FUEL DRAIN, LD AND RD ENGINE 5186388 (72582)	AB	EA	1	•	•	•	•		
PAOZZ	2910-511-3443	TUBE ASSEMBLY, FUEL DRAIN, LB AND RB ENGINE 5173776 (72582)	AB	EA	1	•	•	•	•		
PAOZZ	4730-014-1539	BUSHING, PIPE: FUEL DRAIN 141539 (72582)	AB	EA	2	•	•	•	•		
PAOZZ	4930-420-8920	ELBOW, TUBE: FUEL DRAIN TUBE, 5/16 IN., .080 RESTRICTED 5129848 (72582)	AB	EA	4	•	•	•	•		
PCOZZ	4730-740-2581	PACKING, PREFORMED: DRAIN TUBE, 3/8 IN. 5179938 (72582)	AB	EA	8	•	•	•	•		
PAOZZ	4730-740-2582	NUT, TUBE: DRAIN TUBE, 3/8 IN. 5179937 (72582)	AB	EA	8	•	•	•	•		
PAOZZ	4730-802-2237	BUSHING, PIPE: FILTER OUTLET, 1/2 X 1/4 IN. 116524 (72582)	AB	EA	4	•	•	•	•		
PAOZZ	4730-301-7470	ADAPTER, TUBE: FILTER OUTLET, 1/4 IN. PIPE 444000 (72582)	AB	EA	4	•	•	•	•		
PAOZZ	4730-203-9058	ELBOW, PIPE TO TUBE: 90 DEG, FUEL DRAIN TUBE 5179969 (72582)	AB	EA	8	•	•	•	•		
PCOZZ	4730-740-2581	PACKING, PREFORMED: FUEL DRAIN TUBE, 3/8 IN. 5179938 (72582)	AB	EA	8	•	•	•	•		
XDOZZ		CLIP, TUBE: FILTER TO CYLINDER HEAD 3223241 (72582)	AB	EA	4						
PAOZZ	5305-984-6212	SCREW, MACHINE: FUEL CLIP, NO. 10-24 THD SIZE, 3/4 IN. LG MS35206-265 (72582)	AB	EA	2	•	•	•	•		
PAOZZ	4730-203-9058	ELBOW, PIPE TO TUBE: 3/8 IN., FUEL DRAIN TUBE 5179969 (72582)	AB	EA	2	•	•	•	•		
PAOZZ	4730-740-2582	NUT, TUBE: 3/8 IN., FUEL DRAIN TUBE 5179937 (72582)	AB	EA	2	•	•	•	•		
PCOZZ	2930-354-1408	SEAL ASSEMBLY: 5/16 IN., RING, FUEL DRAIN TUBE 5177493 (72582)	AB	EA	4	•	•	•	•		
PAOZZ	4730-203-3433	NUT, TUBE: 5/16 IN., FUEL DRAIN TUBE 6177490 (72582)	AB	EA	4	•	•	•	•		
XDOZZ		CLIP, FUEL DRAIN TUBE 5182629 (72582)	AB	EA	2						
XDOZZ		CLIP, FUEL DRAIN TUBE 5176249 (72582)	AB	EA	2						
XDOZZ		CLAMP, LOOP: FUEL DRAIN TUBE 5177623 (72582)	AB	EA	4						
XDOZZ		CLAMP, LOOP: FUEL DRAIN TUBE 5110070 (72582)	AB	EA	4						

(1) SMR CODE	(2) FEDERAL STOCK NUMBER	(3) DESCRIPTION REF NUMBER & MFR CODE	USABLE ON CODE	(4) UNIT OF MEAS	(5) QTY INC IN UNIT	(6) 15-DAY ORGANIZATIONAL MAINTENANCE ALW (a) 1-5	(b) 6-20	(c) 21-50	(d) 51-100	(7) ILLUSTRATION (a) FIG. NO.	(b) ITEM NO.
XDOZZ		CLAMP: FUEL DRAIN TUBE 5173797 (72582)	AB	EA	4						
PAOZZ	5305-206-6776	SCREW, CAP, HEXAGON HEAD: DRAIN TUBE CLAMP, 3/8-24 THD SIZE, 1 IN. LG FF385GRADE8 (81348)	AB	EA	4	•	•	•	•		
PAOZZ	5310-080-6004	WASHER, FLAT: FUEL DRAIN CLAMP, 3/8 IN. SCREW SIZE NAS27183-14 (96906)	AB	EA	4	•	•	•	•		
PAOZZ	5310-637-6941	WASHER, LOCK: FUEL DRAIN TUBE, 3/8 IN. SCREW SIZE MS35338-46 (96906)	AB	EA	4	•	•	•	•		
PAOZZ	5310-732-0559	NUT, PLAIN, HEXAGON: FUEL DRAIN CLAMP, 3/8-24 THD SIZE MS51968-8 (96906)	AB	EA	4	•	•	•	•		
XDOZZ		SUPPORT, CLIP: DRAIN TUBE 5186405 (72582)	AB	EA	4						
		GROUP 10 - FUEL PUMP									
PAOZZ	5306-613-9396	BOLT ASSEMBLED WASHER: FUEL PUMP MTG 5118219 (72582)		EA	12	•	•	•	•	13	1
R KFOZZ		GASKET: FUEL PUMP MTG 5150193 (72582) (PART OF GASKET SET, FSN 5330-379-4301)		EA	8					13	2
PAOZZ	2910-524-7862	FORK, COUPLING: FUEL PUMP 5150199 (72582)		EA	4	•	•	•	•	13	3
C PAOZZ	2815-152-6233	PLUG, PIPE: FUEL PUMP DRAIN 5145009 (72582)		EA	4	•	•	•	•	13	4
PAOZZ	4730-277-8768	ADAPTER, STRAIGHT: FUEL PUMP DRAIN 137406 (72582)		EA	4	•	•	•	•	13	5
PAOZZ	2815-363-7560	TUBE ASSEMBLY, METAL: FUEL PUMP DRAIN 5158825 (72582)		EA	8	•	•	•	•	13	6
PAOZZ	2910-937-6573	PUMP, ROTARY POWER DRIVEN: FUEL LB AND RB ENGINE 5198318 (72582) (INCLUDES SAME COMPONENTS AS PUMP, FSN 2910-808-2655, EXCEPT WHERE ANNOTATED)		EA	2	•	•	•	•	13	
PAOZZ	2910-808-2655	PUMP, ROTARY POWER DRIVEN: FUEL, LD AND RD ENGINE 5199161 (72582)		EA	2	•	•	•	•	13	
XAOZZ		SCREW, CAP, HEXAGON HEAD: COVER MTG, 1/4-20 THD SIZE, 3/4 IN. LG 18320: (72582)		EA	16					13	7
XAOZZ		WASHER, LOCK: COVER MTG, 1/4 IN. SCREW SIZE MS35338-44 (96906)		EA	8					13	8
XAOZZ		COVER, FUEL PUMP: LD AND RD ENGINE 5134628 (72582) (USED ON PUMP, FSN 2910-808-2655, ONLY)		EA	2					13	9
XAOZZ		COVER, FUEL PUMP LB AND RB ENGINE 5134560 (72582) (USED ON PUMP, FSN 2910-937-6573, ONLY)		EA	2					13	9
XAOZZ		PIN, STRAIGHT, HEADLESS: BODY, 1/4 IN. DIA, 5/8 IN. LG 141195 (72582)		EA	4					13	10
XAOZZ		GEAR, SPUR 5174975 (72582)		EA	2					13	11

	(1) SMR CODE	(2) FEDERAL STOCK NUMBER	(3) DESCRIPTION REF NUMBER & MFR CODE	USABLE ON CODE	(4) UNIT OF MEAS	(5) QTY INC IN UNIT	(6) 15-DAY ORGANIZATIONAL MAINTENANCE ALW (a) 1-5	(b) 6-20	(c) 21-50	(d) 51-100	(7) ILLUSTRATION (a) FIG. NO.	(b) ITEM NO.
	XAOZZ		GEARSHAFT, SPUR 5181747 (72582)		EA	2					13	12
	XAOZZ		BALL, BEARING: STEEL, 1/8 IN. DIA MB19061-3 (96906)		EA	2					13	13
	XAOZZ		SHAFT ASSEMBLY 5181746 (72582)		EA	2					13	14
	XAOZZ		SHAFT PUMP DRIVE 5178700 (72582)		EA	2					13	15
	XAOZZ		GEAR, SPUR 5174975 (72582)		EA	2					13	16
	XAOZZ		SEAL, PLAIN ENCASED: FUEL PUMP 5230007 (72582)		EA	4					13	17
	XAOZZ		PLUG, MACHINE THREAD 5174971 (72582)		EA	2					13	18
	XAOZZ		WASHER, FLAT: VALVE PLUG 5161003 (72582)		EA	2					13	19
	XAOZZ		SPRING, HELICAL, COMPRESSION 5184530 (72582)		EA	2					13	20
	XAOZZ		PIN, STRAIGHT, HEADLESS 103709 (72582)		EA	2					13	21
	XAOZZ		VALVE, RELIEF: FUEL PUMP 5174973 (72582)		EA	2					13	22
	XAOZZ		BODY, FUEL PUMP: LD AND RD ENGINE 5177292 (72582) (USED ON PUMP, FSN 2910-808-2655, ONLY)		EA	2					13	23
	XAOZZ		BODY, FUEL PUMP: LB AND RB ENGINE 5177293 (72582) (USED ON PUMP, FSN 2910-937-6573, ONLY)		EA	2					13	23
			GROUP 11 - ROCKER ARM COVER									
R	PAOZZ	2815-347-1332	COVER ASSEMBLY, ROCKER ENGINE 5176383 (72582)		EA	4	•	•	•	•	14	1
	PCOZZ	5330-171-9233	GASKET: ROCKER COVER 5150329 (72582)		EA	8	•	•	•	•	14	2
	PAOZZ	5315-786-6197	PIN, ROCKER, COVER SCREW: 1/8 IN. DIA, 1 IN. LG 45553? (72582)		EA	16	•	•	•	•	14	3
	PCOZZ	5330-641-0468	WASHER, NONMETALLIC: ROCKER COVER THUMBSCREW 5150333 (72582)		EA	16	•	•	•	•	14	4
	PAOZZ	5305-363-8051	THUMBSCREW, ROCKER COVER 5157194 (72582)		EA	16	•	•	•	•	14	5
	PAOZZ	5307-363-8059	STUD, EXTENSION, ROCKER COVER 5157192 (72582)		EA	16	•	•	•	•	14	6
			GROUP 12 - FUEL INJECTORS									
C	PAOZZ	5305-269-3216	SCREW, CAP, HEXAGON HEAD: INJECTOR MTG, 3/8-16 THD SIZE, 2 IN. LG MS90725-66 (96906)		EA	24	•	•	•	•	15	1
	PAOZZ	5310-276-3015	WASHER, BALL SOCKET: INJECTOR MTG 5150250 (72582)		EA	24	•	•	•	•	15	2
	PAOZZ	2910-620-7460	CLAMP, INJECTOR 5111335 (72582)		EA	24	•	•	•	•	15	3

(1) SMR CODE	(2) FEDERAL STOCK NUMBER	(3) DESCRIPTION REF NUMBER & MFR CODE	USABLE ON CODE	(4) UNIT OF MEAS	(5) QTY INC IN UNIT	(6) 15-DAY ORGANIZATIONAL MAINTENANCE ALW (a) 1-5	(b) 6-20	(c) 21-50	(d) 51-100	(7) ILLUSTRATION (a) FIG. NO.	(b) ITEM NO.
PAOFH	2910-399-5550	INJECTOR, FUEL ENGINE, HV 7 5228305 (72582)		EA	24	•	•	•	•	15	
		GROUP 13 - INJECTOR CONTROL TUBE									
PAOZZ	5315-839-2325	PIN, COTTER: LINK PIN, 1/16 IN. DIA, 1/2 IN. LG MS24665-132 (96906)		EA	8	•	•	•	•	16	1
PAOZZ	5315-251-9989	PIN, STRAIGHT, HEADLESS: LINK, GOVERNOR 5150265 (72582)		EA	4	•	•	•	•	16	2
PAOZZ	5340-014-2583	RETAINER: LINK RETAINING, 13/64 IN. SPRING 142583 (72582)		EA	4	•	•	•	•	16	3
PAOZZ	5310-262-5429	WASHER, FLAT: LINK RETAINING 5150941 (72582)		EA	4	•	•	•	•	16	4
C PAOZZ	2815-589-1433	LINK, GOVERNOR CONTROL 5150996 (72582)		EA	2	•	•	•	•	16	5
PAOZZ	5306-558-8187	BOLT, MACHINE: LOAD LIMIT ADJUSTING 5176817 (72582)		EA	4	•	•	•	•	16	6
C PAOZZ	5310-880-7746	NUT, PLAIN, HEXAGON: ADJUSTING BOLT, 5/16-24 THD SIZE 214279 (72582)		EA	4	•	•	•	•	16	7
PAOZZ	5305-272-2080	SCREW, MACHINE: LEVER ASSEMBLY 5176228 (72582)		EA	48	•	•	•	•	16	22
		GROUP 14 - THROTTLE CONTROLS									
PAOZZ	5305-688-2111	SCREW, CAP, HEXAGON HEAD: LEVER, 3/8-16 THD SIZE, 1 3/8 IN. LG MS90728-63 (96906)		EA	2	•	•	•	•	17	1
PAOZZ	5310-637-9541	WASHER, LOCK: LEVER, 3/8 IN. SCREW SIZE MS35338-46 (96906)		EA	2	•	•	•	•	17	2
PAOFF	4730-050-4208	FITTING, LUBRICATION MS:5003-1 (96906)		EA	6	•	•	•	•	17	7
R PAOFF	5306-207-8116	BOLT, MACHINE: 5/16-24 THD SIZE, 1 5/8 IN. LG 100014 (72582)		EA	2	•	•	•	•	17	10
PAOZZ	5305-688-2111	SCREW, CAP, HEXAGON HEAD: 3/8-16 THD SIZE, 1 3/8 IN. LG MS90728-63 (96906)		EA	2	•	•	•	•	17	18
PAOZZ	5310-637-9541	WASHER, LOCK: 3/8 IN. MS35338-46 (96906)		EA	2	•	•	•	•	17	19
C PAOZZ	5310-880-7746	NUT, PLAIN, HEXAGON: LINK MTG, 5/16-24 THD SIZE MS51968-5 (96906)		EA	6	•	•	•	•	17	26
PAOZZ	5310-407-9566	WASHER, LOCK: LINK MTG, 5/16 IN. SCREW SIZE MS35338-45 (96906)		EA	6	•	•	•	•	17	27
PAOZZ		SCREW, CAP, HEXAGON HEAD: LINK MTG, 5/16-24 THD SIZE, 1 5/8 IN. LG 100015 (72582)		EA	6	•	•	•	•	17	28
PAOZZ	5305-688-2111	SCREW, CAP, HEXAGON HEAD: 3/8-16 THD SIZE, 1 3/8 IN. LG 186612 (72582)		EA	8	•	•	•	•	17	41
PAOZZ	5310-637-9541	WASHER, LOCK: CROSS-SHAFT BRACKET, 3/8 IN. SCREW SIZE MS35338-46 (96906)		EA	8	•	•	•	•	17	42

(1)	(2)	(3)		(4)	(5)	(6)				(7)	
SMR CODE	FEDERAL STOCK NUMBER	DESCRIPTION REF NUMBER & MFR CODE	USABLE ON CODE	UNIT OF MEAS	QTY INC IN UNIT	15-DAY ORGANIZATIONAL MAINTENANCE ALW (a) 1-5	(b) 6-20	(c) 21-50	(d) 51-100	ILLUSTRATION (a) FIG. NO.	(b) ITEM NO.
		GROUP 15 - HEAT EXCHANGER, ENGINE									
PAOZZ	4730-909-8627	CLAMP, HOSE MS35842-13 (96906)		EA	4	•	•	•	•	18	1
PCOZZ	4720-278-5051	HOSE, PREFORMED: 1 7/8 IN. ID X 2 IN. LG 5173020 (72582)		EA	2	•	•	•	•	18	2
PAOZZ	2930-590-1716	TEE, PIPE: KEEL COOLER 5186395 (72582)		EA	2	•	•	•	•	18	3
PAOZZ	4730-909-8627	CLAMP, HOSE MS35842-13 (96906)		EA	4	•	•	•	•	18	4
PCOZZ	4720-278-5051	HOSE, PREFORMED: KEEL COOLER. 1 7/8 IN. ID X 2 IN. LG 5173020 (72582)		EA	2	•	•	•	•	18	5
PAOZZ	4730-277-8182	TEE, HOSE: THERMOSTAT HOUSING 5186394 (72582)		EA	2	•	•	•	•	18	6
C PAOZZ	5305-269-3208	SCREW, CAP, HEXAGON HEAD: OVERFLOW TUBE CLIP MS35295-57 (96906)	AB	EA	4	•	•	•	•	18	7
C PAOZZ	5310-637-9541	WASHER, LOCK: OVERFLOW TUBE CLIP MS35338-46 (96906)	AB	EA	4	•	•	•	•	18	8
XDOZZ		CLIP, TUBE: OVERFLOW TUBE 3291487 (72582)	AB	EA	4					18	9
XDOZZ		TUBE, OVERFLOW: HEAT EXCHANGER 5168826 (72582)		EA	4					18	10
PAOZZ	4730-014-3343	ELBOW: EXPANSION TANK OVERFLOW 1433343 (72582)		EA	4	•	•	•	•	18	11
PAOZZ	4820-752-9040	COCK, DRAIN: THERMOSTAT HOUSING, 1/8 IN. MS35782-4 (96906)		EA	4	•	•	•	•	18	12
PAOZZ	4820-849-1220	COCK, DRAIN: 1/4 IN., WATER INLET TUBE MS35782-5 (96906)		EA	4	•	•	•	•	18	13
C PAOZZ	5305-225-8502	SCREW, CAP, HEXAGON HEAD: THERMOSTAT HOUSING, OUTLET MTG, 5/16-18 THD SIZE, 1 1/2 IN. LG MS90725-38 (96906)		EA	4	•	•	•	•	18	14
PAOZZ	5310-407-9566	WASHER, LOCK: THERMOSTAT HOUSING, OUTLET MTG, 5/16 IN. SCREW SIZE MS35338-45 (96906)		EA	32	•	•	•	•	18	15
XDOZZ		OUTLET, THERMOSTAT HOUSING 5172944 (72582)		EA	4					18	16
PCOZZ	5330-298-0504	GASKET: THERMOSTAT HOUSING, OUTLET 5172923 (72582)		EA	4	•	•	•	•	18	17
PAOZZ	5305-543-2419	SCREW, CAP, HEXAGON HEAD: THERMOSTAT HOUSING MTG, 3/8-16 THD SIZE, 1 1/8 IN. LG MS90728-61 (96906)		EA	16	•	•	•	•	18	18
PAOZZ	5310-637-9541	WASHER, LOCK: THERMOSTAT HOUSING MTG, 3/8 IN. SCREW SIZE MS35338-46 (96906)		EA	16	•	•	•	•	18	19
XDOZZ		HOUSING, THERMOSTAT 5178427 (72582)		EA	4					18	20
PCOZZ	6620-570-6295	GASKET: THERMOSTAT 5167761 (72582)		EA	4	•	•	•	•	18	21
PAOZZ	6620-377-3497	THERMOSTAT ASSEMBLY, HEAT CONTROL 5172141 (72582)		EA	2	•	•	•	•	18	22

(1) SMR CODE	(2) FEDERAL STOCK NUMBER	(3) DESCRIPTION REF NUMBER & MFR CODE	USABLE ON CODE	(4) UNIT OF MEAS	(5) QTY INC IN UNIT	(6) 15-DAY ORGANIZATIONAL MAINTENANCE ALW (a) 1-5	(b) 6-20	(c) 21-50	(d) 51-100	(7) ILLUSTRATION (a) FIG. NO.	(b) ITEM NO.
PACZZ	2930-462-8114	CAP: EXPANSION TANK 850901 (72582)		EA	4	•	•	•	•	18	26
PCCZZ	2930-786-6193	GASKET: EXPANSION TANK NECK 5118061 (72582)		EA	4	•	•	•	•	18	27
		GROUP 16 - ENGINE COOLING PIPING									
PAOZZ	4730-908-6292	CLAMP, HOSE: 2 7/8 IN. MS35842-14 (96906)	A	EA	2	•	•	•	•	19	1
MOOZZ		HOSE, CONNECTING: HEAT EXCHANGER TO ENGINE, 2 3/8 IN. ID MMC40F38 (98042) MANUFACTURE FROM:	A	EA	1					19	2
PCOZZ	4720-235-4121	HOSE, AS REQUIRED		FT		•	•	•	•	19	
PAOZZ	4730-909-8627	CLAMP, HOSE: 2 5/8 IN. MS35842-13 (96906)	AC	EA	8	•	•	•	•	19	3
MOOZZ		HOSE, CONNECTING: 2 1/8 IN. ID MMC40F40 (98042) MANUFACTURE FROM:	A	EA	1					19	4
PCOZZ	4720-235-4122	HOSE, AS REQUIRED		FT		•	•	•	•	19	
MOOZZ		PACKING, FLAX: BULKHEAD FITTING, 1/4 IN. SQUARE MMC40M13 (98042) MANUFACTURE FROM:	A	EA	1					19	5
PCOZZ	5330-543-3205	PACKING, AS REQUIRED		FT		•	•	•	•	19	
PAOZZ	4730-908-3194	CLAMP, HOSE MS35842-11 (96906)	A	EA	2	•	•	•	•	19	6
MOOZZ		HOSE, RUBBER: 5/8 IN. ID MMC40F56 (98042) MANUFACTURE FROM:	A	EA	1					19	7
PCOZZ	4720-235-4134	HOSE, AS REQUIRED		FT		•	•	•	•	19	
PAOZZ		COCK, DRAIN: 3/4 IN. IPS, BRONZE 81413-8 (14959)	A	EA	9	•	•	•	•	19	8
PAOZZ		VALVE, CHECK: 2 IN., SOLDER 1303-2 (14959)	A	EA	2	•	•	•	•	19	9
PAOZZ		VALVE, GLOBE: 1/2 IN., BRONZE 12501-2 (14959)	A	EA	1	•	•	•	•	19	10
XDOZZ		GAGE, WATER 627 (14959) (INCLUDES GLASS, WATER AND ANGLE VALVES, 14 IN. CENTERS)	A	EA	2					19	11
PAOZZ		GLASS, WATER GAGE: 5/8 IN. OD X 13 IN. LG 5-8X13 (14959)		EA	2	•	•	•	•	19	
PAOZZ		VALVE, CHECK: 3/4 IN., BRONZE, SOLDER 13033-4 (14959)	A	EA	2	•	•	•	•	19	12
XDOZZ		PIPE DECK PLATE, W/KEY: 2 1/2 IN., BRONZE F10528 (46576) (MARKED FOR WATER)		EA	2					20	4
N PAOZZ	4730-908-6293	CLAMP, HOSE MS35842-15 (96906)	C	EA	8	•	•	•	•	20	5
N MOOZZ		HOSE, RUBBER: 2 7/8 IN. ID X 6 IN. LG 35W (24161) MANUFACTURE FROM:	C	EA	2					20	6
N PAOZZ	4720-288-9756	HOSE, RUBBER, 2 7/8 IN. ID, AS REQUIRED ZZH426TYPE1GRADECLASS2 (81348)		FT		•	•	•	•	20	

	(1) SMR CODE	(2) FEDERAL STOCK NUMBER	(3) DESCRIPTION REF NUMBER & MFR CODE	USABLE ON CODE	(4) UNIT OF MEAS	(5) QTY INC IN UNIT	(6) 15-DAY ORGANIZATIONAL MAINTENANCE ALW (a) 1-5	(b) 6-20	(c) 21-50	(d) 51-100	(7) ILLUSTRATION (a) FIG. NO.	(b) ITEM NO.
	MOOZZ		PIPE, BRASS: EXPANSION TANK FILL, 2 1/2 IN. IPS X 7 1/2 IN. LG 209-4510945-36 (80064) MANUFACTURE FROM:	C	EA	2					20	7
	PAOZZ	4710-278-8772	PIPE, BRASS, 2 1/2 IN. IPS, SCHEDULE 40, 7 1/2 IN. REQUIRED WWP351CLASS1 (81348)		FT		•	•	•	•	20	
N	XDOZZ		UNION, MALE THREADED: TUBE TO EXPANSION TANK, 1/4-18 THD SIZE 3676 (63686)	C	EA	1					20	8
N	MOOZZ		PIPE, THREADLESS: 1/4 IN., COPPER, .540 IN. OD 209-4510945-18 (80064) MANUFACTURE FROM:	C	EA	1					20	9
N	PAOZZ	4710-277-6099	PIPE, COPPER, 1/4 IN., AS REQUIRED WWP377 (81348)		FT		•	•	•	•	20	
N	XDOZZ		ELBOW: SILBRAZE, 90 DEG, 1/4 IN. 3605-1-4IN (63686)	C	EA	4					20	10
	MOOZZ		PIPE, THREADLESS: 1/4 IN., COPPER 209-4510945-18 (80064) MANUFACTURE FROM:	C	EA	1					20	11
	PAOZZ	4710-277-6099	PIPE, COPPER, 1/4 IN., AS REQUIRED WWP377 (81348)		FT		•	•	•	•	20	
	XDOZZ		ELBOW: 90 DEG, BRONZE, 1/4 IN., THREADLESS 3605-1-4IN (63686)	C	EA	1					20	12
	MOOZZ		PIPE, THREADLESS: 1/4 IN., COPPER 209-4510945-18 (80064) MANUFACTURE FROM:		EA	1					20	13
	PAOZZ	4710-277-6099	PIPE, COPPER, 1/4 IN., AS REQUIRED WWP377 (81348)		FT		•	•	•	•	20	
N	PAOZZ	4730-908-3194	HOSE, CLAMP: 1 1/4 IN. MS35842-11 (96906)	C	EA	8	•	•	•	•	20	14
N	MOOZZ		HOSE, FLEXIBLE: 1/2 IN. ID 209-4510945-19 (80064) MANUFACTURE FROM:	C	EA	2					20	15
N	PCOZZ	4720-189-2779	HOSE, FLEXIBLE, 1/2 IN., 6 IN. REQUIRED FOR EA HOSE ZZH28TYPE1GRADEBCLASS2 (81348)		FT		•	•	•	•	20	
	MOOZZ		PIPE, THREADLESS: 1/4 IN., COPPER 209-4510945-18 (80064) MANUFACTURE FROM:	C	EA	1					20	16
	PAOZZ	4710-277-6099	PIPE, COPPER, 1/4 IN., AS REQUIRED WWP377 (81348)		FT		•	•	•	•	20	
	MOOZZ		PIPE, THREADLESS: 1/4 IN., COPPER 209-4510945-18 (80064) MANUFACTURE FROM:	C	EA	1					20	17
	PAOZZ	4710-277-6099	PIPE, COPPER, 1/4 IN., AS REQUIRED WWP377 (81348)		FT		•	•	•	•	20	
N	XDOZZ		TEE: SILBRAZE, 1/4 IN., NO. 150 3610-1-4IN (63686)	C	EA	2					20	18
	MOOZZ		PIPE, THREADLESS: 1/4 IN., COPPER 209-4510945-18 (80064) MANUFACTURE FROM:		EA	1					20	19
	PAOZZ	4710-277-6099	PIPE, COPPER, 1/4 IN., AS REQUIRED WWP377 (81348)		FT		•	•	•	•	20	
	XDOZZ		UNION, MALE THREADED: PIPE TO ELBOW, 1/4-18 THD SIZE 3676 (63686)	C	EA	1					20	20
N	XDOZZ		ELBOW, STREET: PIPE, 90 DEG, 1/4-18 THD SIZE, EXPANSION TANK OUTLET 3409 (63686)	C	EA	2					20	21

(1) SMR CODE	(2) FEDERAL STOCK NUMBER	(3) DESCRIPTION REF NUMBER & MFR CODE	USABLE ON CODE	(4) UNIT OF MEAS	(5) QTY INC IN UNIT	(6) 15-DAY ORGANIZATIONAL MAINTENANCE ALW (a) 1-5	(b) 6-20	(c) 21-50	(d) 51-100	(7) ILLUSTRATION (a) FIG. NO.	(b) ITEM NO.
N XDOZZ		ELBOW, UNION: 90 DEG, MALE THREADED, 1 IN. 3732-11N (63686)	C	EA	1					20	22
MOOZZ		PIPE, THREADLESS: 1 IN. ID, COPPER 209-4510945-26 (80064) MANUFACTURE FROM:	C	EA	1					20	23
PAOZZ	4710-277-6069	PIPE, COPPER, 1 IN. ID, AS REQUIRED WWP377 (81348)		FT		•	•	•	•	20	
N XDOZZ		ELBOW, PIPE: THREADLESS, 45 DEG, 1 IN. 3607-11N (63686)	C	EA	2					20	24
MOOZZ		PIPE, THREADLESS: 1 IN. ID, COPPER 209-4510945-26 (80064) MANUFACTURE FROM:	C	EA	1					20	25
PAOZZ	4710-277-6069	PIPE, COPPER, 1 IN., AS REQUIRED WWP377 (81348)		FT		•	•	•	•	20	
N PAOZZ	4820-287-2302	VALVE, SWING CHECK: NO. 200, SILBRAZE, 1 IN. 420NS11N (63686)	C	EA	2	•	•	•	•	20	26
N MOOZZ		PIPE, THREADLESS: 1 IN. ID, COPPER 209-4510945-26 (80064) MANUFACTURE FROM:	C	EA	1					20	27
N PAOZZ	4710-277-6069	PIPE, COPPER, 1 IN., AS REQUIRED WWP377 (81348)		FT		•	•	•	•	20	
N XDOZZ		ELBOW: 90 DEG, 1 IN. 3605-11N (63686)	C	EA	2					20	28
MOOZZ		PIPE, THREADLESS: 1 IN. ID, COPPER 209-4510945-1 (80064) MANUFACTURE FROM:	C	EA	1					20	29
PAOZZ	4710-277-6069	PIPE, COPPER, 1 IN., AS REQUIRED WWP377 (81348)		FT		•	•	•	•	20	
XDOZZ		ELBOW: 90 DEG, 1 IN. 3605-11N (63686)	C	EA	2					20	30
MOOZZ		PIPE, THREADLESS: 1 IN. ID, COPPER 209-4510945-26 (80064) MANUFACTURE FROM:	C	EA	1					20	31
PAOZZ	4710-277-6069	PIPE, COPPER, 1 IN., AS REQUIRED WWP377 (81348)		FT		•	•	•	•	20	
N PAOZZ	4730-908-3193	CLAMP, HOSE: 2 IN. MS35842-12 (96906)	C	EA	8	•	•	•	•	20	32
N MOOZZ		HOSE, FLEXIBLE: 1 1/4 IN. ID 209-4510945-24 (80064) MANUFACTURE FROM:	C	EA	2					20	33
N PCOZZ	4720-235-4120	HOSE, FLEXIBLE: 1 IN. ID, 6 IN. REQUIRED FOR EA HOSE ZZH42BTYPE1GRADEBCLASS10R2 (81348)		FT		•	•	•	•	20	
XDOZZ		ELBOW, UNION: 90 DEG, MALE THREADED, 1 IN. 3732-11N (63686)	C	EA	1					20	34
XDOZZ		ELBOW: 90 DEG, 1 IN. 3605-11N (63686)	C	EA	1					20	35
MOOZZ		PIPE, THREADLESS: 1 IN. ID, COPPER 209-4510945-1 (80064) MANUFACTURE FROM:	C	EA	1					20	36
PAOZZ	4710-277-6069	PIPE, COPPER, 1 IN., AS REQUIRED WWP377 (81348)		FT		•	•	•	•	20	
XDOZZ		UNION, MALE THREADED: PIPE TO ELBOW, 1/4-18 THD SIZE 3676 (63686)	C	EA	1					20	37
XDOZZ		ELBOW, STREET: PIPE TO ENGINE, 90 DEG, 1/4-18 THD SIZE 3409 (63686)	C	EA	2					20	38

	(1) SMR CODE	(2) FEDERAL STOCK NUMBER	(3) DESCRIPTION REF NUMBER & MFR CODE	USABLE ON CODE	(4) UNIT OF MEAS	(5) QTY INC IN UNIT	(6) 15-DAY ORGANIZATIONAL MAINTENANCE ALW (a) 1-5	(b) 6-20	(c) 21-50	(d) 51-100	(7) ILLUSTRATION (a) FIG. NO.	(b) ITEM NO.
N	XDOZZ		WATER GAGE: 14 IN. CENTER, 1/2 IN. BRONZE 630 (14959)	C	EA	2					20	39
N	PAOZZ		GLASS, WATER GAGE: 5/8 IN. OD X 13 IN. LG 5-8X13 (14959)	C	EA	2	•	•	•	•		
N	XDOZZ		REDUCING COUPLING: 1/2 X 3/8 IN. 3425 (63686)	C	EA	4					20	40
N	XDOZZ		NIPPLE, PIPE: WATER GAGE, 3/8-18 THD SIZE, 3 1/2 IN. LG WWN351TYPE1 (81348)	C	EA	4					20	41
N	XDOZZ		ELBOW, STREET: WATER GAGE, 90 DEG, 3/8-18 THD SIZE 3409-3-8IN (63686)	C	EA	4					20	42
N	PAOZZ	4730-908-6292	CLAMP, HOSE: 3 1/2 IN. MS35842-14 (96906)	C	EA	16	•	•	•	•	20	49
N	MOOZZ		HOSE, FLEXIBLE: 2 3/8 IN. ID 209-4510945-1 (80064) MANUFACTURE FROM:	C	EA	4					20	50
N	PCOZZ	4720-235-4121	HOSE, FLEXIBLE, 2 3/8 IN. ID, 3 IN. OD, 6 IN. REQUIRED FOR EA HOSE ZZH428TYPE2GRADEACLASS1 (81348)		FT		•	•	•	•	20	
N	MOOZZ		TUBE, COPPER: 2 3/8 IN. OD 209-4510945-3 (80064) MANUFACTURE FROM:	C	EA	1					20	51
	PAOZZ	4710-277-4613	TUBE, COPPER, 2 3/8 IN. OD, AS REQUIRED MILT24107 (96906)		FT		•	•	•	•	20	
N	XDOZZ		ELBOW, PIPE: 2 IN. ID, 90 DEG 3628 (63686)	C	EA	2					20	52
	MOOZZ		TUBE, COPPER: 2 3/8 IN. OD 209-4510945-3 (80064) MANUFACTURE FROM:	C	EA	1					20	53
	PAOZZ	4710-277-4613	TUBE, COPPER, 2 3/8 IN. OD, AS REQUIRED MILT24107 (96906)		FT		•	•	•	•	20	
	XDOZZ		ELBOW PIPE: 2 IN. ID, 90 DEG, SILBRAZE 3628 (63686)	C	EA	2					20	54
	MOOZZ		TUBE, COPPER: 2 3/8 IN. ID 209-4510945-3 (80064) MANUFACTURE FROM:	C	EA	1					20	55
	PAOZZ	4710-277-4613	PIPE, COPPER, 2 3/8 IN. OD, AS REQUIRED MILT24107 (96906)		FT		•	•	•	•	20	
N	XDOZZ		ELBOW, TUBE: 2 IN., 45 DEG 3607-2IN (63686)	C	EA	2					20	56
	MOOZZ		TUBE, COPPER: 2 3/8 IN. ID 209-4510945-3 (80064) MANUFACTURE FROM:	C	EA	1					20	57
	PAOZZ	4710-277-4613	TUBE, COPPER, 2 3/8 IN. ID, AS REQUIRED MILT24107 (96906)		FT		•	•	•	•	20	
N	PAOZZ		COUPLING, COMPRESSION 250-2IN (34749)	C	EA	3	•	•	•	•	20	58
N	XDOZZ		UNION, ELBOW: 90 DEG, 2 IN. 3634 (63686)	C	EA	2					20	59
	MOOZZ		TUBE, COPPER: 2 3/8 IN. ID 209-4510945-3 (80064) MANUFACTURE FROM:	C	EA	1					20	60
	PAOZZ	4710-277-4613	TUBE, COPPER, 2 3/8 IN. ID, AS REQUIRED MILT24107 (96906)		FT		•	•	•	•	20	
	XDOZZ		ELBOW, PIPE: 2 IN. ID, 90 DEG 3628 (63686)	C	EA	2					20	61

(1) SMR CODE	(2) FEDERAL STOCK NUMBER	(3) DESCRIPTION REF NUMBER & MFR CODE	USABLE ON CODE	(4) UNIT OF MEAS	(5) QTY INC IN UNIT	(6) 15-DAY ORGANIZATIONAL MAINTENANCE ALW (a) 1-5	(b) 6-20	(c) 21-50	(d) 51-100	(7) ILLUSTRATION (a) FIG. NO.	(b) ITEM NO.
PAOZZ	4730-908-6292	CLAMP, HOSE: 3 1/2 IN. MS35842-14 (96906)	C	EA	16	*	*	*	*	20	62
MOOZZ		HOSE, FLEXIBLE: 2 3/8 IN. ID 209-4510945-1 (80064) MANUFACTURE FROM:	C	EA	4					20	63
PCOFF	4720-235-4121	HOSE, FLEXIBLE, 2 3/8 IN. ID, 3 IN. OD, 6 IN. REQUIRED FOR EA HOSE ZZH428TYPE2GRADEACLASS1 (81348)		FT		*	*	*	*	20	
MOOZZ		TUBE, COPPER: 2 3/8 IN. ID 209-4510945-3 (80064) MANUFACTURE FROM:	C	EA	1					20	64
PAOZZ	4710-277-4613	TUBE, COPPER, 2 3/8 IN. ID, AS REQUIRED MILT24107 (96906)		FT		*	*	*	*	20	
XOOZZ		ELBOW, TUBE: 2 IN., 45 DEG 3607-2IN (63686)		EA	2					20	65
MOOZZ		TUBE, COPPER: 2 3/8 IN. ID 209-4510945-3 (80064) MANUFACTURE FROM:	C	EA	1					20	66
PAOZZ	4710-277-4613	TUBE, BRASS, 2 3/8 IN. ID, AS REQUIRED MILT24107 (96906)		FT		*	*	*	*	20	
XOOZZ		ELBOW, PIPE: 2 IN. ID, 90 DEG 3628 (63686)	C	EA	2					20	67
MOOZZ		TUBE, COPPER: 2 3/8 IN. ID 209-4510945-3 (80064) MANUFACTURE FROM:	C	EA	1					20	68
PAOZZ	4710-277-4613	TUBE, COPPER, 2 3/8 IN. ID, AS REQUIRED MILT24107 (96906)		FT		*	*	*	*	20	
XOOZZ		ELBOW, PIPE: 2 IN. ID, 90 DEG 3628 (63686)	C	EA	2					20	69
MOOZZ		TUBE, COPPER: 2 3/8 IN. ID 209-4510945-3 (80064) MANUFACTURE FROM:	C	EA	1					20	70
PAOZZ	4710-277-4613	TUBE, COPPER, 2 3/8 IN. ID, AS REQUIRED MILT24107 (96906)		FT		*	*	*	*	20	
N PAOZZ	4820-483-0682	VALVE, SWING CHECK: NO. 200, SILBRAZE, 2 IN. 420WS2IN (63686)	C	EA	2	*	*	*	*	20	71
MOOZZ		TUBE, COPPER: 2 3/8 IN. ID 209-4510945-3 (80064) MANUFACTURE FROM:	C	EA	1					20	72
PAOZZ	4710-277-4613	TUBE, COPPER, 2 3/8 IN. ID, AS REQUIRED MILT24107 (96906)		FT		*	*	*	*	20	
N XOOZZ		COUPLING, SILBRAZE: 150 LBS, 2 IN. 3623 (63686)	C	EA	1					20	73
MOOZZ		TUBE, COPPER: 2 3/8 IN. ID 209-4510945-3 (80064) MANUFACTURE FROM:	C	EA	1					20	74
PAOZZ	4710-277-4613	TUBE, COPPER, 2 3/8 IN. ID, AS REQUIRED MILT24107 (96906)		FT		*	*	*	*	20	
XOOZZ		COUPLING: 150 LBS, 2 IN., SILBRAZE 3623 (63686)	C	EA	1					20	75
MOOZZ		TUBE, COPPER: 2 3/8 IN. ID 209-4510945-3 (80064) MANUFACTURE FROM:	C	EA	1					20	76
PAOZZ	4710-277-4613	TUBE, COPPER, 2 3/8 IN. ID, AS REQUIRED MILT24107 (96906)		FT						20	
PAOZZ		COUPLING, COMPRESSION 250-2IN (34749)	C	EA	3	*	*	*	*	20	77

(1) SMR CODE	(2) FEDERAL STOCK NUMBER	(3) DESCRIPTION REF NUMBER & MFR CODE	USABLE ON CODE	(4) UNIT OF MEAS	(5) QTY INC IN UNIT	(6) 15-DAY ORGANIZATIONAL MAINTENANCE ALW (a) 1-5	(b) 6-20	(c) 21-50	(d) 51-100	(7) ILLUSTRATION (a) FIG. NO.	(b) ITEM NO.
XDOZZ		UNION, ELBOW: 90 DEG, 2 IN. 3634 (63686)	C	EA	2					20	78
MOOZZ		TUBE, COPPER: 2 3/8 IN. ID 209-4510945-3 (80064) MANUFACTURE FROM:	C	EA	1					20	79
PAOZZ	4710-277-4613	TUBE, COPPER, 2 3/8 IN. OD, AS REQUIRED MILT24107 (96906)		FT		•	•	•	•	20	
XDOZZ		ELBOW, PIPE: 2 IN. ID, 90 DEG 3628 (63686)	C	EA	2					20	80
N XDOZZ		CLAMP, STEEL, PIPE 212-2IN (26403)	C	EA	4					20	
		GROUP 17 - SEA WATER PIPING									
PAOZZ	4730-908-3193	CLAMP, HOSE: 1 1/16 IN., 2 IN. MS35842-12 (96906)	A	EA	6	•	•	•	•	21	1
MOOZZ		HOSE, RUBBER: 1 5/16 IN. ID, 5 IN. LG 76W (24161) MANUFACTURE FROM:	A	EA	1					21	2
PCOZZ	4720-298-9910	HOSE, AS REQUIRED		FT		•	•	•	•	21	
PAOZZ		VALVE, GLOBE: BRONZE, 125 LBS, 1 IN. TUBE TO 1 IN. PIPE 11N1PSFX11NTUBE (14959)	A	EA	4	•	•	•	•	21	3
MOOZZ		HOSE, RUBBER: 1 5/8 IN. ID, 5 IN. LG 76W (24161) MANUFACTURE FROM:	A	EA	1					21	4
PCOZZ	4720-235-4127	HOSE, AS REQUIRED		FT		•	•	•	•	21	
PAOZZ	4730-909-8627	CLAMP, HOSE MS35842-13 (96906)	A	EA	2	•	•	•	•	21	5
MOOZZ		HOSE, RUBBER: 7/8 IN. ID, 5 IN. LG 76W (24161) MANUFACTURE FROM:	A	EA	1					21	6
PCOZZ	4720-230-6526	HOSE, AS REQUIRED		FT		•	•	•	•	21	
PAOZZ		COCK, DRAIN: 1/2 IN. IPS M0250-1-2 (14959)	A	EA	10	•	•	•	•	21	7
PAOZZ		VALVE, GLOBE: BRONZE, 125 LBS 3-81PSFX3-8INTUBE (14959)	A	EA	1	•	•	•	•	21	8
PAOZZ	4730-908-6292	CLAMP, HOSE MS35842-14 (96906)	A	EA	2	•	•	•	•	21	9
MOOZZ		HOSE, RUBBER: 2 1/8 IN. ID 76W (24161) MANUFACTURE FROM:	A	EA	1					21	10
PCOZZ	4720-235-4122	HOSE, 5 IN. REQUIRED		FT		•	•	•	•	21	
XDOZZ		NUT, TUBE: 1/2 IN. MS39166-7 (96906)	A	EA	1					21	11
XDOZZ		ADAPTER: 1/2 IN. TUBE TO 3/8 IN. IPSM MS39158-7 (96906)	A	EA	1					21	12
PAOZZ	4730-908-6292	CLAMP, HOSE MS35842-14 (96906)	A	EA	2	•	•	•	•	21	13
MOOZZ		HOSE, RUBBER: 2 3/8 IN. ID 76W (24161) MANUFACTURE FROM:	A	EA	1					21	14
PCOZZ	4720-235-4121	HOSE, 5 IN. REQUIRED		FT		•	•	•	•	21	

(1) SMR CODE	(2) FEDERAL STOCK NUMBER	(3) DESCRIPTION REF NUMBER & MFR CODE	USABLE ON CODE	(4) UNIT OF MEAS	(5) QTY INC IN UNIT	(6) 15-DAY ORGANIZATIONAL MAINTENANCE ALW (a) 1-5	(b) 6-20	(c) 21-50	(d) 51-100	(7) ILLUSTRATION (a) FIG. NO.	(b) ITEM NO.
MOOZZ		PACKING, HEMP: 1/4 IN. SQ MMC37F7 (98042) MANUFACTURE FROM:	A	EA	1					21	15
PCOZZ	5330-185-9656	PACKING, AS REQUIRED		EA		•	•	•	•	21	
MOOZZ		GASKET: NEOPRENE, 1/16 IN. THK MMC37F2 (98042) MANUFACTURE FROM:	A	EA	1					21	16
PCOZZ	5330-261-5760	GASKET, .062 IN. THK, 36 IN. WIDE AS REQUIRED MHG156 (81349)		SH		•	•	•	•	21	
PAOZZ		VALVE, SEACOX: BRONZE, 2 IN. FIG1565-2IN (79577)	A	EA	2	•	•	•	•	21	17
XDOZZ		NUT, HEXAGON HEAD: BRASS, 5/16-18 NC 113740 (21450)	A	EA	16					21	18
MOOZZ		TUBING, COPPER: TYPE K HARD, 1 1/2 IN., 30 5/8 IN. LG MANUFACTURE FROM:	A	EA	1					21	19
PAOZZ	4710-278-2221	TUBE, COPPER, 1 1/2 IN., .072 WALL, AS REQUIRED WWT799TYPEKFORM1 (81348)		FT		•	•	•	•	21	
XDOZZ		ELBOW: 90 DEG, STREET, 3/4 IN. TUBE W2334 (41947)	A	EA	4					21	20
XDOZZ		ADAPTER, HOSE: 1/2 IN. TUBE X 1/2 IN. HOSE MS27053-8 (96906)	A	EA	4					21	21
XDOZZ		COUPLING, W/STOP: 1 1/2 X 1 1/2 IN. A3929 (39147)	A	EA	4					21	22
XDOZZ		FLANGE, PUMP MMC37F14 (98042)	A	EA	4					21	23
MOOZZ		GASKET: RAW WATER PUMP FLANGE MMC37F16 (98042) MANUFACTURE FROM:	A	EA	1					21	24
PCOZZ	5330-261-5760	GASKET, .062 IN. THK, 36 IN. WIDE AS REQUIRED MHG156 (81349)		SH		•	•	•	•	21	
XDOZZ		ELBOW, TUBE: 90 DEG, 1 1/2 IN. W2085 (41947)	A	EA	12					21	25
XDOZZ		TEE, REDUCING, TUBE: 2 X 1 1/2 X 1 1/2 IN. W40110 (41947)	A	EA	2					21	26
XDOZZ		ELBOW, TUBE: 2 IN., 90 DEG W2086 (41947)	A	EA	2					21	27
XDOZZ		TEE, REDUCING, TUBE: 2 X 2 X 1/2 IN. IPS A1712 (41947)	A	EA	4					21	28
MOOZZ		TUBING, COPPER: TYPE K HARD, 2 IN., 20 3/8 IN. LG MANUFACTURE FROM:	A	EA	1					21	29
PAOZZ	4710-278-2222	TUBE, COPPER, 2 IN., .083 WALL, AS REQUIRED WWT799TYPEKCLASS2 (81348)		FT		•	•	•	•	21	
PAOZZ	5307-416-4024	STUD, BRASS: 5/16-18 NC, 1 1/2 IN. LG 5167325 (24617)	A	EA	16	•	•	•	•	21	30
XDOZZ		ADAPTER: 2 IN. IPSM X 2 IN. TUBE W1187 (41947)	A	EA	2					21	31
XDOZZ		TEE, REDUCING, SCREWED: 2 X 1 1/2 X 2 IN. IPS WWP501TYPE1CLASSA (81348)	A	EA	4					21	32

(1) SMR CODE	(2) FEDERAL STOCK NUMBER	(3) DESCRIPTION REF NUMBER & MFR CODE	USABLE ON CODE	(4) UNIT OF MEAS	(5) QTY INC IN UNIT	(6) 15-DAY ORGANIZATIONAL MAINTENANCE ALW (a) 1-5	(b) 6-20	(c) 21-50	(d) 51-100	(7) ILLUSTRATION (a) FIG. NO.	(b) ITEM NO.
MOOZZ		PIPE, BRASS: 2 IN., 40 5/8 IN. LG MANUFACTURE FROM:	A	EA	1					21	33
PAOZZ	4710-289-2854	PIPE, BRASS, 2 IN., .156 WALL, AS REQUIRED WWP351CLASS1 (81348)		FT		•	•	•	•	21	
PAOZZ		COCK, PET, BRONZE: W/8S WRENCH 254-21NW8S (14959)	A	EA	2	•	•	•	•	21	34
PAOZZ		VALVE, HOSE: W/CAP AND CHAIN, 1 1/2 IN. IPS X 1 1/2 IN. HOSE 117-1-1-2 (14959)	A	EA	2	•	•	•	•	21	35
XDOZZ		NIPPLE, CLOSE, BRASS: 1 1/2 IN. IPS WWN351TYPE1 (81348)	A	EA	2					21	36
MOOZZ		NIPPLE, LONG: SCHEDULE 40, BRASS, 2 1/2 IPS X 2 1/2 IN. LG 1847034P3 (98042) MANUFACTURE FROM:	A	EA	2					21	37
PAOZZ	4710-278-8772	PIPE, BRASS, 2 1/2 IN., AS REQUIRED WWP351CLASS1 (81348)		FT		•	•	•	•	21	
XDOZZ		CAP, PIPE: 150 LBS, SCREWED, 2 1/2 IN. IPS WWP521TYPE1 (81348)	A	EA	2					21	38
PAOZZ	4730-187-4227	PLUG, SQUARE HEAD: 1/2 IN., BRASS WWP471ATYPE1CLASS1 (81348)	A	EA	2	•	•	•	•	21	39
XDOZZ		CONNECTOR, W/FLANGE: 2 IN. NPT X 2 IN. TUBE W1287 (41947)	A	EA	2					21	40
MOOZZ		TUBING, COPPER: TYPE K SOFT, 3/8 IN., 30 3/8 IN. LG MANUFACTURE FROM:	A	EA	1					21	41
PAOZZ	4710-277-5528	TUBE, COPPER, 3/8 IN., TYPE K SOFT WWT755 (81348)		FT		•	•	•	•	21	
XDOZZ		FLANGE, PUMP MMC37F15 (98042)	A	EA	4					21	42
XDOZZ		COUPLING, W/STOP: 1 1/2 X 1/2 IN. TUBE W1069 (41947)	A	EA	4					21	43
XDOZZ		ADAPTER, MALE: IPS, 1/2 IN. TUBE X 3/8 IN. IPSM A1479 (41947)	A	EA	1					21	44
XDOZZ		TEE, REDUCING, TUBE: 1 1/2 X 1 1/2 X 1/2 IN. W9088 (41947)	A	EA	2					21	45
MOOZZ		TUBING, COPPER: TYPE K HARD, 1 IN., 15 3/8 IN. LG MANUFACTURE FROM:	A	EA	1					21	46
PAOZZ	4710-988-0643	TUBE, COPPER, 1 IN., .065 WALL, AS REQUIRED WWT799TYPEX (81348)		FT		•	•	•	•	21	
XDOZZ		TEE, REDUCING, TUBE: 1 1/2 X 1 X 3/4 IN. W4098 (41947)	A	EA	4					21	47
MOOZZ		NIPPLE, BRASS: SCHEDULE 40, 1 IN. IPS X 8 IN. LG MANUFACTURE FROM:	A	EA	4					21	48
PAOZZ	4730-277-7739	PIPE, BRASS, 1 IN., AS REQUIRED WWP351GRADEASTD (81348)		FT		•	•	•	•	21	
MOOZZ		NIPPLE: THREAD ONE END, SCHEDULE 40, 1 IN. IPS MANUFACTURE FROM:	A	EA	4					21	49
PAOZZ	4730-277-7739	PIPE, BRASS, 1 IN., AS REQUIRED WWP351GRADEASTD (81348)		FT		•	•	•	•	21	

(1) SMR CODE	(2) FEDERAL STOCK NUMBER	(3) DESCRIPTION REF NUMBER & MFR CODE	USABLE ON CODE	(4) UNIT OF MEAS	(5) QTY INC IN UNIT	(6) 15-DAY ORGANIZATIONAL MAINTENANCE ALW (a) 1-5	(b) 6-20	(c) 21-50	(d) 51-100	(7) ILLUSTRATION (a) FIG. NO.	(b) ITEM NO.
MOOZZ		TUBING, COPPER: TYPE K HARD, 3/4 IN., 15 3/8 IN. LG MANUFACTURE FROM:	A	EA	1					21	50
PAOZZ	4710-278-2218	TUBE, COPPER, 3/4 IN., .065 WALL WWT799TYPEKCLASS2 (81348)		FT		•	•	•	•	21	
XDOZZ		ELBOW: 90 DEG, 3/4 IN. TUBE X 3/4 IN. IPSF A1532 (41947)	A	EA	4					21	51
XDOZZ		NIPPLE, CLOSE, BRASS, 3/4 IN. IPS WWN351TYPE2 (81348)	A	EA	4					21	52
XDOZZ		ELBOW: 90 DEG, 3/4 IN. TUBE W2034 (41947)	A	EA	4					21	53
XDOZZ		ADAPTER, MALE: IPS, 1/2 IN. TUBE X 1/2 IN. IPSM A1517 (49147)	A	EA	1					21	54
PAOZZ	4820-878-3556	VALVE, GLOBE: 3/8 IN. TUBE M15126 (41947)	A	EA	1	•	•	•	•	21	55
MOOZZ		TUBING, COPPER: TYPE K SOFT, 1/2 IN., 20 3/8 IN. LG MANUFACTURE FROM:	A	EA	1					21	56
PAOZZ	4710-839-9408	TUBE, COPPER, 1/2 IN., TYPE K WWT799CLASS1 (81348)		FT		•	•	•	•	21	
XDOZZ		NUT, TUBE: 3/8 IN. 1611-6 (79470)	A	EA	1					21	57
XDOZZ		CONNECTOR, MALE: 3/8 IN. TUBE X 1/2 IN. IPSM 48X6X8 (41947)	A	EA	1					21	58
PAOZZ		VALVE, GLOBE: 45 DEG FLARE, 3/8 IN. TUBE 113-1-3-8IN (14959)	A	EA	2	•	•	•	•	21	59
XDOZZ		CONNECTOR, MALE: 1/2 IN TUBE X 1/2 IN. IPSM 48X8X8 (79470)	A	EA	2					21	60
PAOZZ	4730-254-6241	TEE: 125 LBS, SCREWED, 1/2 IN. IPS, BRONZE WWP460CLASSA (81348)	A	EA	1	•	•	•	•	21	61
PAOZZ		VALVE, GLOBE: BRONZE, 125 LBS, ANGLE 13113-8IN (14959)	A	EA	2	•	•	•	•	21	
PAOZZ		VALVE, GATE 451 (14959)	A	EA	2	•	•	•	•	21	
XDOZZ		ADAPTER, STRAIGHT: MALE, 3/4 IN. TUBE X 3/4 IN. IPSM 48X8A (79470)	A	EA	1					21	
XDOZZ		NUT: 5/8 IN. TUBE SIZE 1110X10 (79470)	A	EA	1					21	
XDOZZ		ADAPTER, STRAIGHT: 5/8 IN. TUBE X 1/2 IN. IPSF 48X10 (79470)	A	EA	1					21	
PAOZZ	4730-908-3193	CLAMP, HOSE: 1 1/4 IN. OD MS35842-12 (96906)	B	EA	6	•	•	•	•	22	1
MOOZZ		HOSE, FLEXIBLE: 7/8 IN. ID 358 (24161) MANUFACTURE FROM:	B	EA	1					22	2
PCOZZ	4720-230-6526	HOSE, 5 1/4 IN. REQUIRED ZZH428TYPE1CLASS2GRADEA (81348)		FT		•	•	•	•	22	
MOOZZ		HOSE, FLEXIBLE: 7/8 IN. ID 4175EC (24161) MANUFACTURE FROM:	B	EA	1					22	3
PCOZZ	4720-230-6526	HOSE, 7/8 IN. ID X 24 IN. LG ZZH428TYPE1CLASS2GRADEA (81348)		FT		•	•	•	•	22	

(1) SMR CODE	(2) FEDERAL STOCK NUMBER	(3) DESCRIPTION REF NUMBER & MFR CODE	USABLE ON CODE	(4) UNIT OF MEAS	(5) QTY INC IN UNIT	(6) 15-DAY ORGANIZATIONAL MAINTENANCE ALW (a) 1-5	(b) 6-20	(c) 21-50	(d) 51-100	(7) ILLUSTRATION (a) FIG. NO.	(b) ITEM NO.
HOOZZ		HOSE, FLEXIBLE: 1 5/16 IN. ID 35W (24161) MANUFACTURE FROM:	B	EA	1					22	4
POOZZ	4720-288-9910	HOSE, 4 IN. REQUIRED ZZH428TYPE2CLASS1GRADEB (81348)		FT		•	•	•	•	22	
PAOZZ	4730-908-3193	CLAMP, HOSE: 1 1/4 IN. OD MS35842-12 (96906)	B	EA	2	•	•	•	•	22	5
HOOZZ		HOSE, FLEXIBLE: 1 IN. ID, 1 7/16 IN. OD 358 (24161) MANUFACTURE FROM:	B	EA	1					22	6
POOZZ	4720-555-8015	HOSE, 4 IN. REQUIRED ZZH428TYPE1CLASS1GRADEA (81348)		FT		•	•	•	•	22	
PAOZZ	4730-908-6292	CLAMP, HOSE: 3 1/16 IN. OD MS35842-14 (96906)	B	EA	4	•	•	•	•	22	7
HOOZZ		HOSE, FLEXIBLE: 2 3/8 IN. ID 35W (24161) MANUFACTURE FROM:	B	EA	1					22	8
PAOZZ	4720-235-4121	HOSE, 4 IN. REQUIRED ZZH428CLASS2TYPE3GRADEB (81348)		FT		•	•	•	•	22	
HOOZZ		GASKET: FLANGE, NEOPRENE 15F22-209 (26571) MANUFACTURE FROM:	B	EA	1					22	9
POOZZ	5330-261-5760	GASKET, AS REQUIRED HHG156 (81348)		YD		•	•	•	•	22	
PAOZZ	4820-554-8391	COCK, DRAIN: 1/2 IN. MS35705-4 (96906)	B	EA	1	•	•	•	•	22	10
HOOZZ		GASKET: NEOPRENE, 1/16 IN. THK 1HF2-209 (26571) MANUFACTURE FROM:	B	EA	1					22	11
POOZZ	5330-261-5760	GASKET, AS REQUIRED HHG156 (81348)		YD		•	•	•	•	22	
PAOZZ		PLUG, COCK, FLANGED: 2 IN. IPS, BRONZE 959-2IN (94026)	B	EA	2	•	•	•	•	22	12
HOOZZ		PIPE, BRASS: 2 IN. IPS GUN39P1 (26571) MANUFACTURE FROM:	B	FT	24					22	13
PAOZZ	4710-289-2854	PIPE, BRASS, 2 IN., AS REQUIRED WWP351TYPE1 (81348)		FT		•	•	•	•	22	
XDOZZ		FLANGE: NO. 150, SCREWED, 2 IN., BRONZE 3486-2IN (63686)	B	EA	2					22	14
HOOZZ		TUBING, COPPER: 1/2 IN., .065 WALL GUN39P9 (26571) MANUFACTURE FROM:	B	FT	18					22	15
PAOZZ	4710-684-3565	TUBING, COPPER, .625 IN. OD, .042 WALL AS REQUIRED WWT799CLASS1 (81348)		FT		•	•	•	•	22	
PAOZZ		VALVE, GLOBE: 1 IN. IPS, BRONZE 245WS1IN (94026)	B	EA	4	•	•	•	•	22	16
XDOZZ		TEE: 2 IN. SCREWED, BRONZE 3411-2IN (63686)	B	EA	6					22	17
XDOZZ		ELBOW: 90 DEG, 2 IN. SCREWED, BRONZE 3405-2IN (63686)	B	EA	4					22	18
PAOZZ	4710-277-7736	PIPE, BRASS: 1/2 IN. WWP351CLASS1 (81348) (AS REQUIRED)	B	FT		•	•	•	•	22	19
XDOZZ		TEE, REDUCING, TUBE: 1 1/2 X 1 1/2 X 1/2 IN., BRONZE A1639 (41947)	B	EA	2					22	

(1) SMR CODE	(2) FEDERAL STOCK NUMBER	(3) DESCRIPTION REF NUMBER & MFR CODE	USABLE ON CODE	(4) UNIT OF MEAS	(5) QTY INC IN UNIT	(6) 15-DAY ORGANIZATIONAL MAINTENANCE ALW (a) 1-5	(b) 6-20	(c) 21-50	(d) 51-100	(7) ILLUSTRATION (a) FIG. NO.	(b) ITEM NO.
XDOZZ		ELBOW, UNION: 90 DEG, 2 IN. TUBE, BRONZE A11857 (41947)	B	EA	2					22	20
XDOZZ		FLANGE: 150 LBS, 1 IN. TUBE 3674-11N (63686)	B	EA	4					22	21
XDOZZ		ADAPTER: 3/4 IN. IPSH, 3/4 IN. TUBE, BRONZE A1526 (41947)	B	EA	4					22	22
MOOZZ		TUBING, COPPER: 1 IN., .065 WALL GUN39P7 (26571) MANUFACTURE FROM:	B	FT	18					22	23
PAOZZ	4710-278-2219	TUBING, COPPER, 1.125 OD, AS REQUIRED AS REQUIRED WWT799TYPEK (81348)		FT		*	*	*	*	22	
XDOZZ		REDUCER, TUBE: 1 IN. TO 3/4 IN., BRONZE W1049 (41947)	B	EA	4					22	24
XDOZZ		ELBOW: 90 DEG, TUBE, 3/4 IN. A1530 (41947)	B	EA	4					22	25
MOOZZ		TUBING, COPPER: 3/4 IN., .065 WALL GUN39P10 (26571) MANUFACTURE FROM:	B	FT	8					22	26
PAOZZ	4710-289-5945	TUBING, COPPER, .875 IN. OD, .065 WALL AS REQUIRED WWT799CLASS1 (81348)		FT		*	*	*	*	22	
XDOZZ		TEE, REDUCING, TUBE: 1 1/2 X 1 X 1 IN., BRONZE A1633 (41947)	B	EA	4					22	27
MOOZZ		TUBING, COPPER: 1 1/2 IN., .065 WALL GUN39P5 (26571) MANUFACTURE FROM:	B	FT	35					22	28
PAOZZ	4710-640-1100	TUBING, COPPER, 1.625 IN. OD, .060 WALL AS REQUIRED WWT799CLASS1 (81348)		FT		*	*	*	*	22	
XDOZZ		ELBOW: 90 DEG, TUBE, 1 1/2 IN., BRONZE A1629 (41947)	B	EA	8					22	29
XDOZZ		ELBOW, REDUCING: 90 DEG, TUBE, 1 1/2 IN. TO 1 IN. A2663 (41947)	B	EA	6					22	30
XDOZZ		ELBOW: 90 DEG, TUBE, 2 IN., BRONZE A1277 (41947)	B	EA	8					22	31
MOOZZ		TUBING, COPPER: 2 IN. GUN39P4 (26571) MANUFACTURE FROM:	B	FT	24					22	32
PAOZZ	4710-640-1104	TUBING, COPPER, 2.125 IN. OD, .070 WALL AS REQUIRED WWT799A (81348)		FT		*	*	*	*	22	
MOOZZ		TUBE, COPPER: 1/2 X 2 1/2 IN. LG GUN39F39 (26571) MANUFACTURE FROM:	B	EA	4					22	33
PAOZZ	4710-684-3565	TUBE, COPPER, .625 IN. OD, .042 WALL AS REQUIRED WWT799CLASS1 (81348)		FT		*	*	*	*	22	
XDOZZ		TEE, REDUCING, TUBE: 2 X 1 1/2 X 1 IN., BRONZE A1687 (41947)	B	EA	2					22	34
MOOZZ		TUBE, COPPER, 1/2 IN., 5 IN. LG GUN39F38 (26571) MANUFACTURE FROM:	B	EA	4					22	35
PAOZZ	4710-684-3565	TUBE, COPPER, .625 IN. OD, .042 WALL AS REQUIRED WWT799CLASS1 (81348)		FT		*	*	*	*	22	
XDOZZ		BUSHING, REDUCING, TUBE: 1 X 1/2 IN., BRONZE W1739 (41947)	* B	EA	8					22	36

	(1) SMR CODE	(2) FEDERAL STOCK NUMBER	(3) DESCRIPTION REF NUMBER & MFR CODE	USABLE ON CODE	(4) UNIT OF MEAS	(5) QTY INC IN UNIT	(6) 15-DAY ORGANIZATIONAL MAINTENANCE ALW (a) 1-5	(b) 6-20	(c) 21-50	(d) 51-100	(7) ILLUSTRATION (a) FIG. NO.	(b) ITEM NO.
	XDOZZ		ELBOW, STREET: 90 DEG, 1/2 IN. SCREWED, BRONZE 3409-1-2IN (63686)	B	EA	6						
N	PAOZZ	4730-908-3194	HOSE, CLAMP: 1 1/4 IN. MS35842-11 (96906)	C	EA	16	•	•	•	•	23	1
N	MOOZZ		HOSE, FLEXIBLE: 1 5/16 IN. ID X 4 IN. LG 35W (24161) MANUFACTURE FROM:	C	EA	4					23	2
N	PCOZZ	4720-288-9910	HOSE, RUBBER, 1 5/16 IN. ID 4 IN. REQUIRED FOR EA HOSE ZZH428TYPE2GRADEBCLASS10R2 (81348)		FT		•	•	•	•	23	
N	MOOZZ		PIPE, COPPER: 1 IN. IPS 245-4510946P7 (80064) MANUFACTURE FROM:	C	EA	1					23	3
N	PAOZZ	4710-277-6069	PIPE, COPPER, 1 IN. IPS, 14 FT REQUIRED WWP377 (81348)		FT		•	•	•	•	23	
N	PAOZZ		GLOBE, VALVE, STEEL 245PW31IN (63686)	C	EA	4	•	•	•	•	23	4
N	PAOZZ	4730-908-3193	CLAMP, HOSE: 2 IN. MS35842-12 (96906)	C	EA	16	•	•	•	•	23	5
N	MOOZZ		HOSE, FLEXIBLE: 1 IN. ID X 4 IN. LG 35B (24161) MANUFACTURE FROM:	C	EA	4					23	6
N	PCOZZ	4720-288-7996	HOSE, RUBBER, 1 IN. ID, 4 IN. REQUIRED FOR EA HOSE ZZH428TYPE1GRADEACLASS2 (81348)		FT		•	•	•	•	23	
N	MOOZZ		PIPE, COPPER: 3/4 IN. IPS 245-4510946P10 (80064) MANUFACTURE FROM:	C	EA	1					23	7
N	PAOZZ	4710-277-6068	PIPE, COPPER, 3/4 IN. IPS, 7 FT REQUIRED WWP377 (81348)		FT		•	•	•	•	23	
N	XDOZZ		UNION, ELBOW: 3/4-14 THD SIZE, 90 DEG 3732-3-4IN (63686)	C	EA	4					23	8
N	XDOZZ		ELBOW: 3/4 IN. IPS, 90 DEG, BRONZE 3605-3-4 (63686)	C	EA	4					23	9
N	XDOZZ		TEE, REDUCING: 1 1/2 X 1 X 1 IN. IPS 3610-1-1-2X1X1IN (63686)	C	EA	4					23	10
N	MOOZZ		PIPE, COPPER: 1 1/2 IN. IPS 245-4510946P5 (80064) MANUFACTURE FROM:	C	EA	1					23	11
N	PAOZZ	4710-277-6127	PIPE, COPPER, 1 1/2 IN. IPS, 4 FT REQUIRED WWP377 (81348)		FT		•	•	•	•	23	
N	XDOZZ		ELBOW: BRONZE, 1 1/2 IN., 90 DEG 3605-1-1-2IN (63686)	C	EA	8					23	12
N	XDOZZ		ELBOW: BRONZE, 1 1/2 IN., 45 DEG 3654 (63686)	C	EA	2					23	13
N	PAOZZ	4730-908-3194	CLAMP, HOSE: 1 1/4 IN. MS35842-11 (96906)	C	EA	40	•	•	•	•	23	14
N	MOOZZ		HOSE, FLEXIBLE: 7/8 IN. ID X 5 1/4 IN. LG 7DW (24161) MANUFACTURE FROM:	C	EA	5					23	15
N	PCOZZ	4720-230-6526	HOSE, FLEXIBLE, 7/8 IN. ID, 5 1/4 IN. REQUIRED ZZH428TYPE1GRADEBCLASS2 (81348)		FT		•	•	•	•	23	

	(1) SMR CODE	(2) FEDERAL STOCK NUMBER	(3) DESCRIPTION REF NUMBER & MFR CODE	USABLE ON CODE	(4) UNIT OF MEAS	(5) QTY INC IN UNIT	(6) 15-DAY ORGANIZATIONAL MAINTENANCE ALW (a) 1-5	(b) 6-20	(c) 21-50	(d) 51-100	(7) ILLUSTRATION (a) FIG. NO.	(b) ITEM NO.
N	MOOZZ		PIPE, COPPER: 1/2 IN. IPS 245-4510946P9 (80064) MANUFACTURE FROM:	C	EA	1					23	16
N	PAOZZ	4710-277-6101	PIPE, COPPER, 1/2 IN. IPS, 30 FT REQUIRED WWP377 (81348)		FT		*	*	*	*	23	
N	PAOZZ		GLOBE, VALVE: BRONZE, 1/2 IN. 245PNS1-2IN (63686)	C	EA	3	*	*	*	*	23	17
N	MOOZZ		PIPE, COPPER: 1 1/2 X 2 3/4 IN. LG 245-4510946F60 (80064) MANUFACTURE FROM:	C	EA	8					23	18
N	PAOZZ	4710-277-6127	PIPE, COPPER, 1 1/2 IN. ID, AS REQUIRED WWP377 (81348)		FT		*	*	*	*	23	
N	XDOZZ		TEE, BRONZE, REDUCING: 1 1/2 X 1 1/2 X 1/2 IN. 3610-1-1-2X1-1-2X1-2 (63686)	C	EA	3					23	19
N	MOOZZ		PIPE, COPPER: 1 1/2 IN. ID X 4 1/2 IN. LG 245-4510946F53 (80064) MANUFACTURE FROM:	C	EA	8					23	20
N	PAOZZ	4710-277-6127	PIPE, COPPER, 1 1/2 IN., AS REQUIRED WWP377 (81348)		FT		*	*	*	*	23	
N	PAOZZ	4730-903-1341	CLAMP, HOSE QQS766 (81348)	C	EA	32	*	*	*	*	23	21
N	MOOZZ		HOSE, RUBBER: 1 7/8 IN. ID X 5 IN. LG 245-4510946F57 (80064) MANUFACTURE FROM:	C	EA	4					23	22
N	PCOZZ	4720-235-4126	HOSE, FLEXIBLE, 1 7/8 IN. ID, AS REQUIRED ZZH428TYPE2GRADEBCLASS1 (81348)		FT		*	*	*	*	23	
N	MOOZZ		PIPE, COPPER: 1 1/2 X 3 IN. LG 245-4510946F52 (80064) MANUFACTURE FROM:	C	EA	8					23	23
N	PAOZZ	4710-277-6127	PIPE, COPPER, 1 1/2 IN., AS REQUIRED WWP377 (81348)		FT		*	*	*	*	23	
N	MOOZZ		HOSE, RUBBER: 1 7/8 IN. ID X 6 IN. LG 75W (24161) MANUFACTURE FROM:	C	EA	4					23	24
N	PCOZZ	4720-235-4126	HOSE, FLEXIBLE, 1 7/8 IN. ID, AS REQUIRED ZZH428TYPE2GRADEBCLASS1 (81348)		FT		*	*	*	*	23	
N	XDOZZ		TEE, BRONZE: 2 X 1 1/2 X 1 1/2 IN., SILBRAZE A1689 (41947)	C	EA	2					23	25
N	PAOZZ	4730-908-6292	CLAMP, HOSE: 3 1/16 IN. MS35842-14 (96906)	C	EA	24	*	*	*	*	23	26
N	MOOZZ		HOSE, FLEXIBLE: 2 3/8 IN. ID X 4 IN. LG 35W (24161) MANUFACTURE FROM:	C	EA	6					23	27
N	PCOZZ	4720-235-4121	HOSE, FLEXIBLE, 2 3/8 IN. ID, 4 IN. REQUIRED ZZH428TYPE2GRADEBCLASS1 (81348)		FT		*	*	*	*	23	
N	MOOZZ		TUBE, BRASS: 1 IN. IPS 245-4510946P4 (80064) MANUFACTURE FROM:	C	EA	1					23	28
N	PAOZZ	4710-004-2297	TUBE, BRASS, 2 IN. IPS, 12 FT REQUIRED WWT791GRADE3TYPEB (81348)		FT		*	*	*	*	23	
N	XDOZZ		ELBOW, SILBRAZE: 2 IN. WWP460CLASSB (81348)	C	EA	5					23	29

	(1) SMR CODE	(2) FEDERAL STOCK NUMBER	(3) DESCRIPTION REF NUMBER & MFR CODE	USABLE ON CODE	(4) UNIT OF MEAS	(5) QTY INC IN UNIT	(6) 15-DAY ORGANIZATIONAL MAINTENANCE ALW (a) 1-5	(b) 6-20	(c) 21-50	(d) 51-100	(7) ILLUSTRATION (a) FIG. NO.	(b) ITEM NO.
	PAOZZ	5310-989-5956	NUT, PLAIN, HEXAGON: U-BOLT, BRASS, 3/8-16 THD SIZE MS35691-19 (96906)	C	EA	12	•	•	•	•	23	30
N	PAOZZ	5306-003-0684	U-BOLT: 3/8 IN. DIA X 2 IN. 137-3-8X2IN (26403)	C	EA	6	•	•	•	•	23	31
N	PAOZZ	4820-554-8391	COCK, DRAIN: BRONZE, 1/2 IN. 1121 (48422)	C	EA	2	•	•	•	•	23	32
N	XDOZZ		TEE, REDUCING: IPS 3411-2X1-2X2IN (63686)	C	EA	2					23	33
N	MOOZZ		PIPE, BRASS: 2 IN. IPS 245-4510925P1 (80064) MANUFACTURE FROM:	C	EA	1					23	34
N	PAOZZ	4710-289-2854	PIPE, BRASS, 2 IN. IPS, SCHEDULE 40, 10 FT REQUIRED WWP351CLASS1 (81348)		FT		•	•	•	•	23	
N	XDOZZ		ELBOW: 2 IN. IPS, 45 DEG WWP460CLASSA (81348)	C	EA	12					23	35
N	PAOZZ	4730-222-1844	NIPPLE, CLOSE: 2 IN. WWN351TYPE1 (81348)	C	EA	12	•	•	•	•	23	36
N	PAOZZ	4820-005-4893	COCK, PLUG: 2 IN. IPS 948-2IN (48422)	C	EA	2	•	•	•	•	23	37
N	PAOZZ	5310-768-0318	NUT, PLAIN, HEXAGON: FLANGE, 1/2-13 THD SIZE MS51967-14 (96906)	C	EA	16	•	•	•	•	23	38
N	XDOZZ		FLANGE: 1 IN. IPS, 150 LBS, F-F, SILBRAZE 3674 (63686)	C	EA	4					23	39
N	MOOZZ		GASKET, NEOPRENE: 1/16 IN. THK 245-4510946F22 (80064) MANUFACTURE FROM:	C	EA	4					23	40
N	PCOZZ	5330-290-7911	GASKET, NEOPRENE, 1/16 IN. THK, 50 DUR, AS REQUIRED HHG156 (81348)		SH		•	•	•	•	23	
N	PAOZZ	5307-741-1745	STUD, COLD STEEL: 1/2 IN. NC X 1 1/2 IN. LG 7411745 (19207)	C	EA	16	•	•	•	•	23	41
N	XDOZZ		ELBOW, SILBRAZE: 1/2 IN., 90 DEG 3651 (63686)	C	EA	3					23	42
N	MOOZZ		PIPE, BRASS: 1/2 IN. IPS 245-4510946P14 (80064) MANUFACTURE FROM:	C	EA	1					23	43
N	PAOZZ	4710-289-2851	PIPE, BRASS, 1/2 IN. IPS, 2 FT REQUIRED WWP351CLASS1 (81348)		FT		•	•	•	•	23	
N	PAOZZ	5305-269-3214	SCREW, CAP, HEXAGON HEAD: PLATE MTG, 3/8-16 THD SIZE, 1/2 IN. LG MS90725-64 (96906)	C	EA	32	•	•	•	•	23	44
N	XDOZZ		PLATE, BRASS: 3/4 X 4 X 4 IN. 245-4510946F42 (80064)	C	EA	8					23	45
N	MOOZZ		GASKET, NEOPRENE: 1/16 IN. THK 245-4510946F9 (80064) MANUFACTURE FROM:	C	EA	8					23	46
N	PCOZZ	5330-290-7911	GASKET, NEOPRENE, 1/16 IN. THK, 50 DUR, AS REQUIRED HHG156 (81348)		SH		•	•	•	•	23	
N	XDOZZ		REDUCER: 1 IN. TO 3/4 IN., SILBRAZE 3638-1X3-4IN (63686)	C	EA	4					23	
N	XDOZZ		NIPPLE, LONG: 2 IN. IPS WWN351TYPE1 (81348)	C	EA	2					23	

(1) SMR CODE	(2) FEDERAL STOCK NUMBER	(3) DESCRIPTION REF NUMBER & MFR CODE	USABLE ON CODE	(4) UNIT OF MEAS	(5) QTY INC IN UNIT	(6) 15-DAY ORGANIZATIONAL MAINTENANCE ALW (a) 1-5	(b) 6-20	(c) 21-50	(d) 51-100	(7) ILLUSTRATION (a) FIG. NO.	(b) ITEM NO.
NOOZZ		ANGLE, IRON, L: 1 1/2 X 1 1/2 X 3/16 X 4 IN. LG 245-4510946F33 (80064) MANUFACTURE FROM:	C	EA	6					23	
NPAOZZ	9520-596-1813	ANGLE, IRON, L, 1 1/2 X 1 1/2 X 3/16 IN., AS REQUIRED QQS741 (81348)		FT		•	•	•	•	23	
NPAOZZ	4730-975-1879	CLAMP, EXTENSION: SPLIT PIPE 138-11N (26403)	C	EA	4	•	•	•	•	23	
NPAOZZ		CLAMP, EXTENSION: 1 1/2 IN., SPLIT PIPE 138-1-1-2IN (26403)	C	EA	4	•	•	•	•	23	
NMOOZZ		PIPE, GALVANIZED: 1/4 IN. 245-4510946F45 (80064) MANUFACTURE FROM:	C	EA	1					23	
NPAOZZ	4710-277-5475	PIPE, GALVINIZED, 1/4 IN., SCHEDULE 40, AS REQUIRED WWP404GRADEA (81348)		FT		•	•	•	•	23	
		GROUP 18 - MUFFLER AND EXHAUST PIPING									
PAOZZ	4730-908-6294	CLAMP, HOSE: MUFFLER MS35842-16 (96906)	AB	EA	8	•	•	•	•	24	1
PCOZZ		HOSE, FLEXIBLE: 5 1/2 IN. ID MR3000-44-24 (16632)	A	EA	4	•	•	•	•	24	2
RPCOZZ	4720-197-1594	HOSE, SILICONE COATED: FIBERGLASS GUN1000-40-24 (16632)	B	EA	4	•	•	•	•	24	2
MOOZZ		GASKET: ASBESTOS, 1/8 IN. THK MMC39-43 (98042) MANUFACTURE FROM:	AB	EA	1					24	3
PCOZZ	5330-222-2564	GASKET, AS REQUIRED MILA7021CLASS1 (81349)		SH		•	•	•	•	24	
MOOZZ		GASKET, ASBESTOS MMC39-47 (98042) MANUFACTURE FROM:	AB	EA	5					24	4
PCOZZ	5330-222-2564	GASKET, AS REQUIRED MILA7021CLASS1 (81349)		SH		•	•	•	•	24	
PBOZZ	2990-437-0758	MUFFLER, WATER COOLED MMC39-1-18 (98042)	A	EA	4	•	•	•	•	24	5
PBOZZ	2990-437-0759	MUFFLER, WATER COOLED 10244WSH (91435)	B	EA	4	•	•	•	•	24	5
RPCOZZ	4720-457-6345	HOSE ASSEMBLY: FLEXIBLE, MUFFLER MMC39-53 (98042)	A	EA	4	•	•	•	•	24	6
PCOZZ		HOSE ASSEMBLY: FLEXIBLE, MUFFLER 13-7-9-208 (26571)	B	EA	1	•	•	•	•	24	6
PCOZZ	5640-360-2495	CLOTH, ASBESTOS WIRE: INSERTED MILC10316CLASS1GRADEAA (81349)	A	FT	8	•	•	•	•	24	7
PCOZZ		INSULATION: FIBERGLASS, 2 1/2 IN. THK TEMPMAT2-1-2IN (08869)	B	FT	40	•	•	•	•	24	7
NPAOZZ	5310-913-8881	NUT, PLAIN, HEXAGON: 3/8-16 THD SIZE MS51971-3 (96906)	C	EA	2	•	•	•	•	25	1
NPAOZZ	5310-984-7042	WASHER, LOCK: 3/8 IN. SCREW SIZE MS35338-141 (96906)	C	EA	2	•	•	•	•	25	2
NPAOZZ	5305-717-5467	SCREW, CAP, HEXAGON HEAD: 3/8-16 THD SIZE, 1 1/4 IN. LG MS35307-362 (96906)	C	EA	2	•	•	•	•	25	3
NPAOZZ	5310-768-0321	NUT, PLAIN, HEXAGON: 1/2-13 THD SIZE MS51971-5 (96906)	C	EA	128	•	•	•	•	25	4

(1) SMR CODE	(2) FEDERAL STOCK NUMBER	(3) DESCRIPTION REF NUMBER & MFR CODE	USABLE ON CODE	(4) UNIT OF MEAS	(5) QTY INC IN UNIT	(6) 15-DAY ORGANIZATIONAL MAINTENANCE ALW (a) 1-5	(b) 6-20	(c) 21-50	(d) 51-100	(7) ILLUSTRATION (a) FIG. NO.	(b) ITEM NO.
N PAOZZ	5310-933-8778	WASHER, LOCK: 1/2 IN. SCREW SIZE MS35338-143 (96906)	C	EA	128	•	•	•	•	25	5
N PAOZZ	5305-021-3806	SCREW, CAP, HEXAGON HEAD: 1/2-13 THD SIZE, 1 1/2 IN. LG MS35307-413 (96906)	C	EA	128	•	•	•	•	25	6
N PAOZZ	5310-614-3506	WASHER, FLAT: 1/2 IN. MS15795-817 (96906)	C	EA	96	•	•	•	•	25	7
N PBOZZ	2990-223-3300	MUFFLER, UPPER ASSEMBLY: PORT FORWARD 205-4510947DET4CPF (80064)	C	EA	1	•	•	•	•	25	8
N PBOZZ	2990-165-9556	MUFFLER, UPPER ASSEMBLY: STARBOARD FORWARD 205-4510947DET4CSF (80064)	C	EA	1	•	•	•	•	25	8
N PBOZZ	2990-165-9559	MUFFLER, UPPER ASSEMBLY: PORT AFT 205-4510947DET5CPA (80064)	C	EA	1	•	•	•	•	25	8
N PBOZZ	2990-223-3291	MUFFLER, UPPER ASSEMBLY: STARBOARD AFT 205-4510947DET5CSA (80064)	C	EA	1	•	•	•	•	25	8
N PAOZZ	4730-908-6294	CLAMP, HOSE: 7 IN. MS35842-16 (96906)	C	EA	8	•	•	•	•	25	9
N PCOZZ	4730-168-2107	HOSE, EXHAUST: 5 1/2 IN. ID 55Y (81900) (6 IN. REQUIRED)	C	EA	4	•	•	•	•	25	10
N PAOZZ	5305-646-7389	SCREW, CAP, HEXAGON HEAD: 1/2-13 THD SIZE, 1 IN. LG MS35307-409 (96906)	C	EA	32	•	•	•	•	25	11
PAOZZ	5310-614-3506	WASHER, FLAT: 1/2 IN. MS15795-817 (96906)		EA	32	•	•	•	•	25	12
N XDOZZ		CONNECTOR, OVERBOARD: ENGINE EXHAUST 205-4510947DET5A (80064)	C	EA	1					25	13
N MOOZZ		GASKET: 1/8 IN. THK, HI-TEMP ASBESTOS, 5 5/8 IN. ID X 8 1/2 IN. OD 205-4510947-44 (80064) MANUFACTURE FROM:	C	EA	8					25	14
N PCOZZ	5330-663-7313	GASKET, ASBESTOS, AS REQUIRED HHP46 (81348)		SH		•	•	•	•	25	
N XDOZZ		ELBOW ASSEMBLY: MUFFLER OUTLET 205-4510947DET4C1 (80064)	C	EA	4					25	15
N MOOZZ		GASKET: HI-TEMP ASBESTOS, 1/8 IN. THK, 4 1/4 IN. ID X 8 IN. OD 205-4510947-33 (80064) MANUFACTURE FROM:	C	EA	12					25	16
N PCOZZ	5330-222-2564	GASKET, ASBESTOS, 1/8 IN. THK, AS REQUIRED MILA7021CLASS1 (81348)		SH		•	•	•	•	25	
N MOOZZ		GASKET: ASBESTOS, 1/8 IN. THK, 13 IN. ID X 16 3/4 IN. OD 205-4510947-54 (80064) MANUFACTURE FROM:	C	EA	8					25	17
N PCOZZ	5330-222-2564	GASKET, ASBESTOS, 1/8 IN. THK, AS REQUIRED MILA7021CLASS1 (81349)		FT		•	•	•	•	25	
N PBOZZ		MUFFLER, BOTTOM ASSEMBLY, W/BAFFLE 205-4510947DET4B4B1 (80064)	C	EA	4	•	•	•	•	25	18
N XDOZZ		PIPE ASSEMBLY: ENGINE EXHAUST, UPPER, OUTBOARD 205-4510947DET4D5DD (80064)	C	EA	1					25	19
N XDOZZ		PIPE ASSEMBLY: ENGINE EXHAUST, UPPER, INBOARD 205-4510947DET4D1 (80064)	C	EA	1					25	19

	(1) SMR CODE	(2) FEDERAL STOCK NUMBER	(3) DESCRIPTION REF NUMBER & MFR CODE	USABLE ON CODE	(4) UNIT OF MEAS	(5) QTY INC IN UNIT	(6) 15-DAY ORGANIZATIONAL MAINTENANCE ALW (a) 1-5	(b) 6-20	(c) 21-50	(d) 51-100	(7) ILLUSTRATION (a) FIG. NO.	(b) ITEM NO.
N	PAOZZ	2990-477-6803	ENGINE, FLEXIBLE: EXHAUST CONNECTION ASSEMBLY 205-4510947DET58 (80064)	C	EA	4	*	*	*	*	25	20
N	XDOZZ		CONNECTOR ASSEMBLY: END EXHAUST MANIFOLD 205-4510947DET30 (80064)	C	EA	1					25	21
	PAOZZ		VALVE, CHECK: 1 IN., BRONZE, SOLDER 1303-1 (14959)	A	EA	2	*	*	*	*		
	MOOZZ		HOSE, FLEXIBLE: 1/2 IN. ID X 6 IN. LG, EXPANSION TANK TO HEAT EXCHANGE 358 (24161) MANUFACTURE FROM:	B	EA	1						
	POOZZ	4720-999-4040	HOSE, AS REQUIRED		FT		*	*	*	*		
	PAOZZ	4730-908-3193	CLAMP, HOSE: 1 1/4 IN. MS35842-12 (96906)	B	EA	4	*	*	*	*		
	MOOZZ		HOSE, FLEXIBLE: 1 1/4 IN. ID X 6 IN. LG, HEAT EXCHANGE TO EXPANSION TANK 25-24-213 (26571) MANUFACTURE FROM:	B	EA	1						
	POOZZ	4720-235-4120	HOSE, AS REQUIRED		FT		*	*	*	*		
	PAOZZ	4730-909-8627	CLAMP, HOSE: 2 1/4 IN. MS35842-13 (96906)	B	EA	4	*	*	*	*		
	PAOZZ		PLUG, COCK: 2 IN. IPS, SCREWED, BRONZE 250-21N (14959)	B	EA	2	*	*	*	*		
	MOOZZ		HOSE, RUBBER: 1 7/8 IN. ID X 4 IN. LG 35W (24161) MANUFACTURE FROM:	B	EA	8						
	POOZZ	4720-189-2782	HOSE, RUBBER, 1.875 IN. ID, AS REQUIRED ZZWA28TYPE1CLASS2GRADEA (81348)		FT		*	*	*	*		
	XDOZZ		ELBOW: 90 DEG, 1/2 IN. SCREWED, BRONZE WWP460CLASSA (81348)	B	EA	3						
	XDOZZ		ELBOW: 45 DEG, TUBE, 1 1/2 IN. WWP460CLASSA (81348)	B	EA	2						
N	PAOZZ	5305-685-8156	SCREW, CAP, HEXAGON HEAD: 1/2-13 THD SIZE, 2 1/4 IN. LG MS35307-416 (96906)	C	EA	16	*	*	*	*		
N	MOOZZ		CLIP, LAGGING: SPRING WIRE, .051 DIA 205-4510947-45 (80064) MANUFACTURE FROM:	C	EA	300						
N	PAOZZ	9505-596-1668	WIRE, .051 DIA, STAINLESS STEEL, AS REQUIRED QQW423 (81348)		CL		*	*	*	*		
N	MOOZZ		ASBESTOS CLOTH, INSERTED: .070 IN. THK X 40 IN. W 205-4510947-46 (80064) MANUFACTURE FROM:	C	EA	1						
N	POOZZ	5640-360-2495	CLOTH, WIRE, INSERTED, AS REQUIRED MILC10316CLASS1GRADEAA (81349)		YD		*	*	*	*		
N	MOOZZ		WIRE, SOFT: .030 DIA CRES 205-4510947-47 (80064) MANUFACTURE FROM:	C	EA	1						
N	PAOZZ	9505-554-9159	WIRE, SOFT, .031 DIA, AS REQUIRED QQW423COMP316 (81349)		CL		*	*	*	*		
N	PAOZZ	5310-768-0321	NUT, PLAIN, HEXAGON: 1/2-13 THD SIZE MS51971-5 (96906)	C	EA	64	*	*	*	*		
N	PAOZZ	5310-767-9425	WASHER, FLAT: 1/2 IN. SCREW SIZE MS15795-816 (96906)	C	EA	48	*	*	*	*		

	(1) SMR CODE	(2) FEDERAL STOCK NUMBER	(3) DESCRIPTION REF NUMBER & MFR CODE	USABLE ON CODE	(4) UNIT OF MEAS	(5) QTY INC IN UNIT	(6) 15-DAY ORGANIZATIONAL MAINTENANCE ALW (a) 1-5	(b) 6-20	(c) 21-50	(d) 51-100	(7) ILLUSTRATION (a) FIG. NO.	(b) ITEM NO.
N	PCOZZ		INSULATION: 2 1/2 IN. THK TEMPMAT2-1-2IN (08869)	C	YD	11	•	•	•	•		
N	PAOZZ	5305-727-6804	SCREW, CAP, HEXAGON HEAD: 1/2-13 THD SIZE, 1 3/4 IN. LG MS35307-414 (96906)	C	EA	32	•	•	•	•		
	PAOZZ		VALVE, PLUG, COCK: 2 IN. IPS, FLANGED 959 (48422)	A	EA	2	•	•	•	•		
	PAOZZ	4730-908-3193	CLAMP, HOSE: 1 3/8 IN. MS35842-12 (96906)	AB	EA	4	•	•	•	•		
	MOOZZ		HOSE, CONNECTING: 7/8 IN. ID MMCAOF44 (98042) MANUFACTURE FROM:	A	EA	1						
	PCOZZ	4720-230-6526	HOSE, AS REQUIRED		FT		•	•	•	•		
	PAOZZ		HOSE, FLEXIBLE: STAINLESS STEEL SCH10T321-4X4-1-2 (91198)	AB	FT	2	•	•	•	•		
			GROUP 19 - FRESH WATER PUMP									
	PAOZZ	5306-613-9396	BOLT ASSEMBLY, SEAL WASHER: PUMP ASSEMBLY MTG 5118219 (72582)		EA	12	•	•	•	•	26	1
R	KFOZZ		GASKET: FRESH WATER PUMP MTG 5150193 (72582) (PART OF KITS, FSN 5330-379-4301, 2930-986-4068 AND 2930-025-6743)		EA	4					26	2
	PAOZZ	5306-225-8500	BOLT, MACHINE: FLANGE MTG, 5/16-18 THD SIZE, 1 1/8 IN. LG MS90725-35 (96906)		EA	8	•	•	•	•	26	3
	PAOZZ	5310-407-9566	WASHER, LOCK: FLANGE MTG, 5/16 IN. SCREW SIZE MS35338-45 (96906)		EA	8	•	•	•	•	26	4
R	PAOZZ	5330-774-4058	RETAINER, PACKING: WATER PUMP 5173730 (72582)		EA	4	•	•	•	•	26	5
	KFOZZ		PACKING, PREFORMED: FLANGE 5150191 (72582) (PART OF KITS, FSN 5330-379-4301, 2930-986-4068 AND 2930-025-6743)		EA	4					26	6
	PAOZZ	4820-276-9041	COCK, DRAIN: FRESH WATER PUMP BODY MS35782-6 (96906)		EA	4	•	•	•	•	26	7
R	PAOZZ	5310-768-0319	NUT, PLAIN, HEXAGON: WATER PUMP COVER MTG, 1/4-28 THD SIZE 121902 (72582)		EA	16	•	•	•	•	26	8
R	PAOZZ	5310-582-5965	WASHER, LOCK: WATER PUMP COVER MTG, 1/4 IN. SCREW SIZE MS35338-44 (96906)		EA	16	•	•	•	•	26	9
	KFOZZ		GASKET: WATER PUMP COVER 5150188 (72582) (PART OF KITS, FSN 2930-025-6743, 2930-986-4068 AND 5330-379-4301)		EA	4					26	11
	PAOOF	2930-097-2479	PUMP ASSEMBLY, WATER: FRESH, LD-RD 5186576 (72582) (COMPONENTS SAME AS PUMP ASSEMBLY, FSN 2930-313-6445, EXCEPT WHERE INDIVIDUAL COMPONENTS ARE ANNOTATED)		EA	2	•	•	•	•	26	12
	PAOOF	2930-313-6445	PUMP ASSEMBLY, WATER: FRESH, LB-RB 5186575 (72582)		EA	2	•	•	•	•	26	12
C	KFOZZ		SEAL ASSEMBLY: FRESH WATER PUMP 5186571 (72582) (PART OF KITS, FSN 2930-986-4068 AND 2930-025-6743)		EA	4					26	14

	(1) SMR CODE	(2) FEDERAL STOCK NUMBER	(3) DESCRIPTION REF NUMBER & MFR CODE	USABLE ON CODE	(4) UNIT OF MEAS	(5) QTY INC IN UNIT	(6) 15-DAY ORGANIZATIONAL MAINTENANCE ALW (a) 1-5	(b) 6-20	(c) 21-50	(d) 51-100	(7) ILLUSTRATION (a) FIG. NO.	(b) ITEM NO.
	KFOZZ		SPRING, SEAL: FRESH WATER PUMP 5186570 (72582) (PART OF KITS, FSN 2930-986-4068 AND 2930-025-6743)		EA	4					26	15
C	KFOZZ		BUSHING, SLEEVE: INSERT, FRESH WATER PUMP 5186572 (72582) (PART OF KITS, FSN 2930-986-4068 AND 2930-025-6743)		EA	4					26	16
	PCOZZ	2930-025-6743	PARTS KIT: SEAL, FRESH WATER PUMP 5193605 (72582) (CONSISTS OF)		EA	4	*	*	*	*	26	
			4-GASKET								26	2
			4-PACKING								26	6
			4-GASKET								26	11
			4-SEAL								26	14
			4-SPRING								26	15
			4-BUSHING								26	16
			GROUP 20 - RAW WATER PUMP									
C	PAOFF	4320-389-9090	PUMP, ROTARY: RAW WATER 5186476 (72582)	AB	EA	2	*	*	*	*	27	
C	PAOZZ	5305-012-0233	SCREW, CAP, HEXAGON: PUMP MTG, 3/8-16 THD SIZE, 1 IN. LG 120233 (72582)	AB	EA	12	*	*	*	*	27	1
C	PAOZZ	5310-637-9541	WASHER, LOCK: PUMP MTG, 3/8 IN. SCREW SIZE MS35338-46 (96906)	AB	EA	12	*	*	*	*	27	2
C	KFOZZ		GASKET: RAW WATER PUMP TO ADAPTER 5194567 (72582) (PART OF KIT, FSN 2930-461-3897)	AB	EA	2					27	3
C	PAOZZ	4820-752-9040	COCK, DRAIN: 1/8 IN. PIPE MS35782-4 (96906)	AB	EA	2	*	*	*	*	27	4
C	KFOZZ		SCREW, MACHINE: COVER MTG, NO. 10-32 THD SIZE, 3/8 IN. LG 101075 (72582) (PART OF KIT, FSN 2930-461-3897)	AB	EA	12					27	6
C	XAOZZ		COVER: RAW WATER PUMP 5196585 (72582) (PART OF KIT, FSN 2930-461-3897)	AB	EA	2					27	7
C	KFOZZ		GASKET: RAW WATER PUMP COVER 5193603 (72582) (PART OF KIT, FSN 2930-461-3898)	AB	EA	2					27	8
C	KFOZZ		SEAL, PLAIN: RAW WATER PUMP 5195020 (72582) (PART OF KIT, FSN 2930-461-3897)	AB	EA	2					27	12
C	KFOZZ		IMPELLER, PUMP 5196629 (72582) (PART OF KIT, FSN 2930-461-3897)	AB	EA	2					27	25
C	PAOZZ	5305-045-1988	SCREW, CAP, HEXAGON HEAD: PUMP MTG, 7/16-14 THD SIZE, 1 1/4 IN. LG MS90725-87 (96906)	AB	EA	2	*	*	*	*	27	27
C	PAOZZ	5310-209-0965	WASHER, LOCK: PUMP MTG, 7/16 IN. MS35338-47 (96906)	AB	EA	2	*	*	*	*	27	28
C	PAOZZ	5305-053-8993	SCREW, CAP, HEXAGON HEAD: PUMP MTG, 1/2-13 THD SIZE, 1 3/8 IN. LG MS90725-112 (96906)		EA	8	*	*	*	*	27	29

(1)	(2)	(3)		(4)	(5)	(6)				(7)	
		DESCRIPTION				15-DAY ORGANIZATIONAL MAINTENANCE ALW				ILLUSTRATION	
SMR CODE	FEDERAL STOCK NUMBER	REF NUMBER & MFR CODE	USABLE ON CODE	UNIT OF MEAS	QTY INC IN UNIT	(a) 1-5	(b) 6-20	(c) 21-50	(d) 51-100	(a) FIG. NO.	(b) ITEM NO.
C PAOZZ	5310-584-5272	WASHER, LOCK: PUMP MTG, 1/2 IN. MS35338-48 (96906)		EA	8	•	•	•	•	27	30
PCOZZ	5330-620-7359	GASKET: WATER PUMP MTG 5117061 (72582)		EA	1	•	•	•	•	27	32
C PAOZZ	2910-932-4813	COUPLING: WATER PUMP DRIVE 5133716 (72582)		EA	1	•	•	•	•	27	33
C PAOZZ	5306-638-4963	BOLT, EXTERNALLY RELIEVED: PUMP DRIVE 5176474 (72582)	AB	EA	4	•	•	•	•	27	34
C PAOZZ	2815-898-4468	PLATE, DRIVE: RAW WATER PUMP 5131627 (72582)	AB	EA	1	•	•	•	•	27	35
C PAOZZ	2815-214-3760	PLATE, RETAINING: SPACER, WATER PUMP DRIVE 5177026 (72582)	AB	EA	1	•	•	•	•	27	36
N PAOFF	2815-793-6786	PUMP, ROTARY, RAW WATER 5115396 (72582)	C	EA	1	•	•	•	•	28	
N PAOZZ	5305-045-1988	SCREW, CAP, HEXAGON HEAD: PUMP MTG, 7/16-14 THD SIZE, 1 1/2 IN. LG MS90725-87 (96906)	C	EA	1	•	•	•	•	28	1
N PAOZZ	5310-209-0965	WASHER, LOCK: PUMP MTG, 7/16 IN. SCREW SIZE MS35338-47 (96906)	C	EA	1	•	•	•	•	28	2
N PAOZZ	5305-053-8993	SCREW, CAP, HEXAGON HEAD: PUMP MTG, 1/2-13 THD SIZE, 1 1/2 IN. LG MS90725-112 (96906)	C	EA	4	•	•	•	•	28	3
N PAOZZ	5310-584-5272	WASHER, LOCK: PUMP MTG, 1/2 IN. SCREW SIZE MS35338-48 (96906)	C	EA	4	•	•	•	•	28	4
N PCOZZ	5330-765-1059	GASKET: RAW WATER PUMP MTG 5194567 (72582)	C	EA	1	•	•	•	•	28	5
N KFOZZ		SCREW, MACHINE: NO. 10-32 THD SIZE, 3/8 IN. FILLISTER HEAD 114366 (72582) (PART OF KIT, FSN 2930-461-3897 AND 2930-767-0508)	C	EA	6					28	6
N PAOZZ	5306-989-0830	BOLT, MACHINE: 3/8-16 THD SIZE, 1 IN. LG 186678 (72582)	C	EA	6	•	•	•	•	28	9
N PAOZZ	5310-637-9541	WASHER, LOCK: 3/8 IN. MS35338-46 (96906)	C	EA	6	•	•	•	•	28	10
N XDOZZ		ADAPTER: HOUSING, RAW WATER 5193551 (72582)	C	EA	1					28	11
N KFOZZ		SEAL, PLAIN, ENCLOSED: WATER PUMP SHAFT 5198419 (72582) (PART OF KITS, FSN 2930-461-3897 AND 2930-767-0508)	C	EA	1					28	19
N KFOZZ		IMPELLER, PUMP 5193553 (72582) (PART OF KITS, FSN 2930-461-3897 AND 2930-767-0508)	C	EA	1					28	30
N PCOZZ	5330-620-7359	GASKET: INLET AND OUTLET MTG 5117061 (72582) (PART OF KIT, FSN 2930-461-3897)	C	EA	2	•	•	•	•	28	33
N PAOZZ	2910-932-4813	COUPLING, PUMP DRIVE 5143616 (72582)	C	EA	1	•	•	•	•	28	34
N PAOZZ	5306-869-2868	BOLT, HEXAGON HEAD: SPECIAL PUMP DRIVE 5145092 (72582)	C	EA	2	•	•	•	•	28	35
N XDOZZ		PLATE, DRIVE: RAW WATER PUMP 5170450 (72582)	C	EA	1					28	36

(1) SMR CODE	(2) FEDERAL STOCK NUMBER	(3) DESCRIPTION REF NUMBER & MFR CODE	USABLE ON CODE	(4) UNIT OF MEAS	(5) QTY INC IN UNIT	(6) 15-DAY ORGANIZATIONAL MAINTENANCE ALW (a) 1-5	(b) 6-20	(c) 21-50	(d) 51-100	(7) ILLUSTRATION (a) FIG. NO.	(b) ITEM NO.
PCOZZ	2930-461-3898	KIT, REPLACEMENT: RAW WATER PUMP 5197227 (72582) (CONSISTS OF)	AB	EA	1	•	•	•	•	27	
		24-SCREW								27	6
		4-GASKET								27	8
		4-IMPELLER								27	25
PCOZZ	2930-767-0508	KIT, REPLACEMENT 5194860 (72582) (CONSISTS OF)	C	EA	1	•	•	•	•	28	
		6-SCREW								28	6
		1-SEAL								28	19
		1-IMPELLER								28	30
		GROUP 21 - WATER MANIFOLD, ENGINE									
PAOZZ	4730-908-3194	CLAMP, HOSE: WATER BY-PASS HOSE MS35842-11 (96906)		EA	16	•	•	•	•	29	1
XDOZZ		TUBE ASSEMBLY: WATER BY-PASS 5181802 (72582)		EA	4					29	2
C PCOZZ	4720-288-9770	HOSE, PREFORMED: 1 X 2 1/2 IN. LG 5177217 (72582)		EA	8	•	•	•	•	29	3
PAOZZ	4730-019-4727	ELBOW: BY-PASS TUBE 5181801 (72582)		EA	4	•	•	•	•	29	4
PAOZZ	4730-274-6285	ADAPTER, STRAIGHT: BY-PASS TUBE 5177218 (72582)		EA	4	•	•	•	•	29	5
PAOZZ	5930-548-7346	CONTROL, ALARM: WATER TEMPERATURE 5173018 (72582)		EA	4	•	•	•	•	29	6
PAOZZ	4730-193-0875	BUSHING, PIPE: ALARM CONTROL 144034 (72582)		EA	4	•	•	•	•	29	7
PAOZZ	4730-908-6292	CLAMP: WATER OUTLET SEAL, 2 1/2 IN. DIA MS35842-14 (96906)		EA	4	•	•	•	•	29	8
KFOZZ		PACKING, PREFORMED: WATER OUTLET 5156770 (72582) (PART OF KIT, FSN 5330-379-4301)		EA	4					29	9
R PAOZZ	4730-289-5176	PLUG, PIPE: WATER MANIFOLD, 1/2-14 THD SIZE MS49005-8 (96906)		EA	4	•	•	•	•	29	10
PAOZZ	5310-732-0559	NUT, PLAIN, HEXAGON: MANIFOLD MTG, 3/8-24 THD SIZE MS51968-8 (96906)		EA	48	•	•	•	•	29	11
PAOZZ	5310-637-9541	WASHER, LOCK: MANIFOLD MTG, 3/8 IN. SCREW SIZE MS35338-46 (96906)		EA	48	•	•	•	•	29	12
XDOZZ		MANIFOLD, WATER 5167294 (72582)		EA	4					29	13
KFOZZ		GASKET: WATER OUTLET MANIFOLD 5150361 (72582) (PART OF KIT, FSN 5330-379-4301)		EA	24					29	14
XDOZZ		TUBE ASSEMBLY: WATER BY-PASS 5124002 (72582)		EA	1					29	
XDOZZ		TUBE ASSEMBLY: WATER BY-PASS 5124003 (72582)		EA	1					29	

(1) SMR CODE	(2) FEDERAL STOCK NUMBER	(3) DESCRIPTION REF NUMBER & MFR CODE	USABLE ON CODE	(4) UNIT OF MEAS	(5) QTY INC IN UNIT	(6) 15-DAY ORGANIZATIONAL MAINTENANCE ALW (a) 1-5	(b) 6-20	(c) 21-50	(d) 51-100	(7) ILLUSTRATION (a) FIG. NO.	(b) ITEM NO.
		GROUP 22 - SEA WATER STRAINER									
PB000	2040-115-3705	STRAINER, SEA WATER HD2000A (72922)		EA	2	•	•	•	•	30	
C XDOZZ		NUT, WING: END CAP 575 (72922)		EA	2					30	1
C PACZZ	5330-079-2113	WASHER, LOCK: END CAP 504F (72922)		EA	2	•	•	•	•	30	2
C XDOZZ		CAP, END 582A (72922)		EA	2					30	3
R PCCZZ	5330-929-8730	GASKET: CYLINDER 10 (72922)		EA	4	•	•	•	•	30	4
PACZZ	2040-115-3703	SCREEN, STRAINER HD59A (72922)		EA	2	•	•	•	•	30	5
C PACZZ	2040-826-6021	CYLINDER, LUCITE: STRAINER 588B (72922)		EA	2	•	•	•	•	30	6
C XDOZZ		ROD: THREADED ENDS HD98A (72922)		EA	2					30	7
C PAOZZ	5305-005-0836	SCREW AND WASHER ASSEMBLY VD3 (72922)		EA	1	•	•	•	•	30	8
C XDOZZ		HANDLE, PLUG VD2502 (72922)		EA	1					30	9
C PAOZZ		NUT, PLUG END 99NE108 (72922)		EA	1	•	•	•	•	30	10
PAOZZ	5310-981-5774	WASHER, PLUG END VD8 (72922)		EA	1	•	•	•	•	30	11
XAOZZ		BODY PLUG ASSEMBLY HD2000A93A (72922)		EA	1					30	12
		GROUP 23 - KEEL COOLER									
MOOZZ		HOSE: KEEL COOLER VENT 185-4510915F2 (80064) MANUFACTURE FROM:	C	EA	2					32	7
PCOZZ	4720-235-4121	HOSE, RUBBER, 2 3/8 IN. ID, AS REQUIRED ZZH428TYPE2GRADEBCLASS1 (81348)		FT		•	•	•	•	32	
		GROUP 24 - ENGINE SPEED GOVERNOR									
PAOZZ	5305-206-6229	SCREW, CAP, HEXAGON HEAD: GOVERNOR TO CYLINDER HEAD, LB, LD ENGINE, 1/2-20 THD SIZE, 1 1/4 IN. LG 186601 (72582)		EA	6	•	•	•	•	33	1
PAOZZ	5305-068-0508	SCREW, CAP, HEXAGON HEAD: GOVERNOR TO CYLINDER HEAD, RD ENGINE, 1/4-20 THD SIZE, 3/4 IN. LG MS90728-6 (96906)		EA	2	•	•	•	•	33	1
PAOZZ	5310-582-9563	WASHER, LOCK: GOVERNOR TO CYLINDER HEAD, 1/4 IN. SCREW SIZE MS35338-44 (96906)		EA	12	•	•	•	•	33	2
C KFOZZ		GASKET: GOVERNOR TO CYLINDER HEAD 5150869 (72582) (PART OF GASKET SET, FSN 5330-379-4301)		EA	16					33	3
R XDOZZ		SPACER: GOVERNOR TO CYLINDER HEAD 5150512 (72582)		EA	V					33	4
PAOZZ	5306-613-9396	BOLT, ASSEMBLED WASHER: GOVERNOR TO BLOWER 5118219 (72582)		EA	24	•	•	•	•	33	5

	(1) SMR CODE	(2) FEDERAL STOCK NUMBER	(3) DESCRIPTION REF NUMBER & MFR CODE	USABLE ON CODE	(4) UNIT OF MEAS	(5) QTY INC IN UNIT	(6) 15-DAY ORGANIZATIONAL MAINTENANCE ALW (a) 1-5	(b) 6-20	(c) 21-50	(d) 51-100	(7) ILLUSTRATION (a) FIG. NO.	(b) ITEM NO.
R	KFOZZ		GASKET: GOVERNOR TO BLOWER 5150246 (72582) (PART OF GASKET SET, FSN 5330-379-4301)		EA	2					33	6
	PAOZZ	5305-068-0508	SCREW, CAP, HEXAGON HEAD: LEVER, LB, LD AND RD ENGINE, 1/4-20 THD SIZE, 3/4 IN. LG MS90728-6 (96906)		EA	2	•	•	•	•	33	7
	PAOZZ	5305-225-3843	SCREW, CAP, HEXAGON HEAD: LEVER, RD ENGINE, 1/4-20 THD SIZE, 1 IN. LG MS90728-8 (96906)		EA	1	•	•	•	•	33	7
R	PAOZZ	5310-582-5965	WASHER, LOCK: LEVER SCREW, RD ENGINE, 1/4 IN. SCREW SIZE MS35338-44 (96906)		EA	3	•	•	•	•	33	8
	XDOZZ		LEVER, GOVERNOR COVER, SHUTDOWN SHAFT: LB, LD AND RD ENGINE 5183042 (72582)		EA	3					33	9
	XDOZZ		LEVER, GOVERNOR THROTTLE SHAFT: RB ENGINE 5115970 (72582)		EA	1					33	10
	XDOZZ		LEVER, REMOTE CONTROL: GOVERNOR THROTTLE SHAFT, LB, LD AND RD ENGINE 5158432 (72582)		EA	3					33	10
	XDOZZ		LEVER ASSEMBLY, PIN: RB ENGINE 5112848 (72582)		EA	1					33	10
	PAOZZ	5315-363-8099	PIN, STRAIGHT, HEADLESS: GOVERNOR COVER 5150894 (72582)		EA	1	•	•	•	•	33	11
	XDOZZ		PIN, STRAIGHT, HEADLESS: LEVER 141195 (72582)		EA	1					33	12
	PAOZZ	5360-322-6896	SPRING, LEVER RETURN 5151737 (72582)		EA	1	•	•	•	•	33	13
	PBOFH	2910-115-3694	GOVERNOR ASSEMBLY: LB ENGINE 5112679 (72582) (COMPONENTS SAME AS GOVERNOR, FSN 2910-110-9508, EXCEPT WHERE INDIVIDUAL COMPONENTS ARE ANNOTATED)		EA	1	•	•	•	•	33	
	PBOFH	2910-110-9510	GOVERNOR ASSEMBLY: LD ENGINE 5112678 (72582) (COMPONENTS SAME AS GOVERNOR, FSN 2910-110-9508, EXCEPT WHERE INDIVIDUAL COMPONENTS ARE ANNOTATED)		EA	1	•	•	•	•	33	
	PBOFH	2910-110-9509	GOVERNOR ASSEMBLY: RB ENGINE 5172764 (72582) (COMPONENTS SAME AS GOVERNOR, FSN 2910-110-9508, EXCEPT WHERE INDIVIDUAL COMPONENTS ARE ANNOTATED)		EA	1	•	•	•	•	33	
	PBOFH	2910-110-9508	GOVERNOR ASSEMBLY: RD ENGINE 5112938 (72582)		EA	1	•	•	•	•	33	
R	PAOZZ	5365-281-6660	RING, RETAINING: GOVERNOR SHAFT 5174429 (72582)		EA	1	•	•	•	•	33	14
	PAOZZ	5310-262-5429	WASHER, FLAT 5150941 (72582)		EA	1	•	•	•	•	33	15
	XDOZZ		CAM, GOVERNOR COVER 5110659 (72582)		EA	1					33	16
C	PAOZZ	5305-622-9483	SCREW W/WASHER: FILLISTER HEAD, 1/4-20 THD SIZE, 3/4 IN. LG MS35265-81 (96906)		EA	6	•	•	•	•	33	17
R	PAOZZ	5310-582-5965	WASHER, LOCK: 1/4 IN. MS35338-44 (96906)		EA	6	•	•	•	•	33	18

(1) SMR CODE	(2) FEDERAL STOCK NUMBER	(3) DESCRIPTION REF NUMBER & MFR CODE	USABLE ON CODE	(4) UNIT OF MEAS	(5) QTY INC IN UNIT	(6) 15-DAY ORGANIZATIONAL MAINTENANCE ALW (a) 1-5	(b) 6-20	(c) 21-50	(d) 51-100	(7) ILLUSTRATION (a) FIG. NO.	(b) ITEM NO.
R PAOZZ	5310-262-3105	WASHER, FLAT: GOVERNOR SHAFT 5153060 (72582)		EA	2	•	•	•	•	33	23
PAOZZ	5310-012-6189	NUT, PLAIN, HEXAGON: THROTTLE ROD, 3/8-24 THD SIZE 126189 (72582)		EA	4	•	•	•	•	33	
C PAOZZ	5310-732-0559	NUT, PLAIN, HEXAGON: THROTTLE ROD, 3/8-24 THD SIZE MS51968-8 (96906)		EA	8	•	•	•	•	33	
R KFOZZ		GASKET: GOVERNOR BREATHER HOLE COVER 5150500 (72582) (PART OF GASKET SET, FSN 5330-379-4301)		EA	2					33	
PAOZZ	5310-407-9566	WASHER, LOCK: GOVERNOR SHUTDOWN LEVER, 5/16 IN. SCREW SIZE MS35338-45 (96906)		EA	1	•	•	•	•	33	
PAOZZ		PIN, STRAIGHT, HEADLESS: THROTTLE SHAFT 5115971 (72582)		EA	1	•	•	•	•	33	
PAOZZ	5305-225-3843	SCREW, CAP, HEXAGON HEAD: THROTTLE SHAFT LEVER MS90728-8 (96906)		EA	2	•	•	•	•	33	
C PAOZZ	5310-515-9627	WASHER, FLAT: THROTTLE SHAFT LEVER 50-4-18-17-7 (38597)		EA	1	•	•	•	•	33	
R PAOZZ	5310-582-5965	WASHER, LOCK: THROTTLE SHAFT LEVER, 1/4 IN. SCREW SIZE MS35338-44 (96906)		EA	2	•	•	•	•	33	
PAOZZ	2815-621-3932	TUBE ASSEMBLY: GOVERNOR BEARING LUBRICATION 5183994 (72582)		EA	3	•	•	•	•	33	
PAOZZ	2990-333-4862	TUBE ASSEMBLY: GOVERNOR BEARING LUBRICATION 5176834 (72582)		EA	1	•	•	•	•	33	
PAOZZ	4730-522-2252	ELBOW, RESTRICTION: GOVERNOR BEARING LUBRICATION 5166265 (72582)		EA	2	•	•	•	•	33	
C PAOZZ	4730-277-8643	ELBOW: GOVERNOR BEARING LUBRICATION 434X4 (79470)		EA	2	•	•	•	•	33	
PAOZZ	4730-277-7611	ELBOW, PIPE: GOVERNOR LUBE LINE 5177752 (72582)		EA	1	•	•	•	•	33	
PAOZZ	4730-540-2612	ADAPTER, STRAIGHT: GOVERNOR BEARING LUBRICATION 137405 (72582)		EA	2	•	•	•	•	33	
PCOZZ	5330-449-6483	SEAL, PLAIN, ENCASED: GOVERNOR 596330 (72582)		EA	4	•	•	•	•	33	
PAOZZ	5340-999-0317	SCREW, HOLDER, SPRING 5126792 (72582)		EA	2	•	•	•	•	33	
		GROUP 26 - TRANSMISSION OIL FILTER									
PACOO	2815-901-0977	FILTER ASSEMBLY, OIL: TRANSMISSION 5129129 (72582)		EA	4	•	•	•	•	36	1
PACZZ	5307-765-4215	STUD: OIL FILTER, CENTER 5116427 (72582)		EA	4	•	•	•	•	36	2
C PACZZ	5310-136-5712	NUT, SPECIAL, JAM: 5/8-18 IN. 122366 (72582)		EA	4	•	•	•	•	36	3
PDCZZ		RETAINER, LUBE: OIL FILTER SPRING 5187309 (72582)		EA	4					36	4
PCCZZ	5330-604-8094	PACKING, PREFORMED: RETAINER 5187310 (72582)		EA	4	•	•	•	•	36	5

(1) SMR CODE	(2) FEDERAL STOCK NUMBER	(3) DESCRIPTION REF NUMBER & MFR CODE / USABLE ON CODE	(4) UNIT OF MEAS	(5) QTY INC IN UNIT	(6) 15-DAY ORGANIZATIONAL MAINTENANCE ALW (a) 1-5	(b) 6-20	(c) 21-50	(d) 51-100	(7) ILLUSTRATION (a) FIG. NO.	(b) ITEM NO.
C XDCZZ		SPACER, RING: SEAT 5154538 (72582)	EA	4					36	6
XDCZZ		SPRING, HELICAL, COMPRESSOR: OIL FILTER 5187308 (72582)	EA	4					36	7
R PCCZZ	5330-841-5964	GASKET: OIL FILTER COVER 5574130 (72582)	EA	4	*	*	*	*	36	8
XAOZZ		SHELL ASSEMBLY: OIL FILTER 5574906 (72582)	EA	4					36	9
PAOZZ	4820-360-8299	PLUG, PIPE: OIL FILTER SHELL 5570480 (70040)	EA	4	*	*	*	*	36	10
PCCZZ	2940-019-8087	ELEMENT, FILTER: OIL 5574978 (72582)	EA	4	*	*	*	*	36	11
XACZZ		WASHER, NONMETALLIC: OIL SHELL 5571024 (70040)	EA	4					36	12
C XAOZZ		ADAPTER, OIL FILTER 5123382 (72582)	EA	4					36	13
XDOZZ		PLUG, MACHINE THREAD: BY-PASS VALVE 5126686 (72582)	EA	4					36	14
PAOZZ	5330-736-3508	WASHER, NONMETALLIC: PLUG VALVE 5575086 (70040)	EA	4	*	*	*	*	36	15
C XAOZZ		SPRING, HELICAL: BY-PASS VALVE 5133594 (72582)	EA	4					36	16
PAOZZ	2940-944-6249	VALVE: OIL FILTER BY-PASS 5133431 (72582)	EA	4	*	*	*	*	36	17
PAOZZ	4730-044-4692	PLUG, PIPE: ADAPTER 444692 (72582)	EA	4	*	*	*	*	36	18
XDOZZ		BRACKET: OIL FILTER MOUNT, D ENGINE 5114625 (72582)	EA	2					36	
XDOZZ		BRACKET: OIL FILTER MOUNT, D ENGINE 5114626 (72582)	EA	2					36	
XDOZZ		SPACER: 13/32 IN. ID, 3/4 IN. OD, 1/2 IN. THK 5159347 (72582)	EA	4					36	
C PAOZZ	5306-013-7302	BOLT, MACHINE: 3/8-24 X 4 IN. LG 186312 (72582)	EA	4	*	*	*	*	36	
PAOZZ	5310-637-9541	WASHER, LOCK: 3/8 IN. MS35338-46 (96906)	EA	4	*	*	*	*	36	
N XDOZZ		SUPPORT, BRACKET 5122473 (72582) / C	EA	2					36	
PAOZZ	5305-543-2419	SCREW, CAP, HEXAGON HEAD: 3/8-16 X 1 1/8 IN. MS90728-61 (96906)	EA	12	*	*	*	*	36	
PAOZZ	5305-068-0511	SCREW, CAP, HEXAGON HEAD: 3/8-16 X 1 1/4 IN. MS90728-62 (96906)	EA	4	*	*	*	*	36	
PAOZZ	5310-637-9541	WASHER, LOCK: 3/8 IN. MS35338-46 (S6906)	EA	16	*	*	*	*	36	
		GROUP 27 - TRANSMISSION OIL STRAINER								
PAOZZ	2940-792-2712	STRAINER ASSEMBLY, OIL: MARINE GEAR 5112512 (72582)	EA	4	*	*	*	*	37	1

(1)	(2)	(3)	(4)	(5)	(6)				(7)	
		DESCRIPTION			15-DAY ORGANIZATIONAL MAINTENANCE ALW				ILLUSTRATION	
SMR CODE	FEDERAL STOCK NUMBER	REF NUMBER & MFR CODE / USABLE ON CODE	UNIT OF MEAS	QTY INC IN UNIT	(a) 1-5	(b) 6-20	(c) 21-50	(d) 51-100	(a) FIG. NO.	(b) ITEM NO.
PAOZZ	5306-226-4829	BOLT, MACHINE: COVER MTG, 5/16-18 THD SIZE, 1 1/4 IN. LG MS90728-36 (96906)	EA	12	*	*	*	*	37	2
PAOZZ	5310-582-5965	WASHER, LOCK: COVER MTG, 5/16 IN. SCREW SIZE MS35338-44 (96906)	EA	12	*	*	*	*	37	3
XAOZZ		COVER: OIL STRAINER 5112510 (72582)	EA	4					37	4
PCCZZ	5330-786-5320	GASKET: OIL STRAINER COVER 5112511 (72582)	EA	1	*	*	*	*	37	5
PAOZZ	2940-792-2711	ELEMENT: OIL STRAINER, MARINE GEAR 5574252 (72582)	EA	4	*	*	*	*	37	6
XAOZZ		BODY: OIL STRAINER 5112513 (72582)	EA	4					37	7
		GROUP 28 - TRANSMISSION OIL COOLER, CORE AND PLATE ASSEMBLY								
PAOZZ	4730-908-6292	CLAMP, HOSE MS35842-14 (96906)	EA	8	*	*	*	*	38	1
MDOZZ		HOSE, WATER: OIL COOLER, 2 1/4 IN. ID, 4 1/4 IN. LG 5167747 (72582) MANUFACTURE FROM:	EA	1					38	2
PCOZZ	4720-277-9026	HOSE, 2.250 IN. ID ZZH428TYPE1CLASS2GRADEB (81348)	FT		*	*	*	*	38	
PAOZZ	5305-269-3211	SCREW, CAP, HEXAGON HEAD: ELBOW MTG, 3/8-16 THD SIZE, 1 IN. LG MS90725-60 (96906)	EA	16	*	*	*	*	38	3
PAOZZ	5310-637-9541	WASHER, LOCK: ELBOW MTG, 3/8 IN. SCREW SIZE MS35338-46 (96906)	EA	16	*	*	*	*	38	4
C XDOZZ		ELBOW, WATER: OIL COOLER 5186460 (72582)	EA	4					38	5
PCOZZ	5330-097-3248	GASKET: ELBOW MTG 5186428 (72582)	EA	4	*	*	*	*	38	6
C PAOZZ	5305-225-8502	SCREW, CAP, HEXAGON HEAD: ADAPTER AND COVER MTG, 5/16-18 THD SIZE, 1 1/2 IN. LG MS90725-38 (96906)	EA	28	*	*	*	*	38	7
PAOZZ	5310-407-9566	WASHER, LOCK: ADAPTER AND COVER MTG, 5/16 IN. SCREW SIZE MS35338-45 (96906)	EA	28	*	*	*	*	38	8
C XDOZZ		ADAPTER: REVERSE GEAR OIL TUBE 51238822 (72582)	EA	4					38	9
PCOZZ	2815-363-8177	GASKET: ADAPTER TUBE 5159430 (72582)	EA	4	*	*	*	*	38	10
XDOZZ		COVER, HOUSING: OIL COOLER 5167775 (72582)	EA	2					38	11
C KFOZZ		GASKET: CORE, OUTER 5154215 (72582) (PART OF SET, FSN 5330-379-4301)	EA	2					38	12
PBOZZ	2930-377-2472	CORE: OIL COOLER 8502833 (72582)	EA	4	*	*	*	*	38	13

(1) SMR CODE	(2) FEDERAL STOCK NUMBER	(3) DESCRIPTION REF NUMBER & MFR CODE	USABLE ON CODE	(4) UNIT OF MEAS	(5) QTY INC IN UNIT	(6) 15-DAY ORGANIZATIONAL MAINTENANCE ALW (a) 1-5	(b) 6-20	(c) 21-50	(d) 51-100	(7) ILLUSTRATION (a) FIG. NO.	(b) ITEM NO.
KFOZZ		GASKET: CORE, INNER 5150155 (72582) (PART OF SET, FSN 5330-379-4301)		EA	2					38	14
		GROUP 29 - TRANSMISSION CONTROL VALVE AND TUBES									
PAOZZ	5305-225-3840	SCREW, CAP, HEXAGON HEAD: SELECTOR VALVE OPERATING LEVER, 1/4-20 THD SIZE, 7/8 IN. LG MS90725-7 (96906)		EA	1	*	*	*	*	40	1
R PAOZZ	5310-582-5965	WASHER, LOCK: SELECTOR VALVE OPERATING LEVER, 1/4 IN. SCREW SIZE MS35338-44 (96906)		EA	1	*	*	*	*	40	2
XOOZZ		LEVER: SELECTOR VALVE, OPERATING 5178404 (72582)		EA	1					40	3
PAOZZ	5310-768-0319	NUT, PLAIN, HEXAGON: 1/4-28 THD SIZE MS51968-2 (96906)		EA	2	*	*	*	*	40	4
PAOZZ	5310-582-5965	WASHER, LOCK: SHUTOFF VALVE LEVER, 1/4 IN. SCREW SIZE MS35338-44 (96906)		EA	1	*	*	*	*	40	5
PAOZZ	5305-267-8975	SCREW, CAP, HEXAGON HEAD: SHUTOFF VALVE LEVER, 1/4-28 THD SIZE, 1 1/8 IN. LG MS90726-9 (96906)		EA	2	*	*	*	*	40	6
XDOZZ		LEVER: CONTROL SHUTOFF 3222759 (72582)		EA	2					40	7
PAOZZ		PLUG, PIPE: SELECTOR VALVE 103877 (72582)	AB	EA	2	*	*	*	*	40	
		GROUP 30 - TACHOMETER DRIVE CABLE, ADAPTER AND SHAFT									
C PAOZZ		BOLT, MACHINE: DRIVE ADAPTER MTG, 5/16-18 THD SIZE, 3/4 IN. LG 179816 (72582)		EA	4	*	*	*	*	41	1
PAOZZ	5310-407-9566	WASHER, LOCK: DRIVE ADAPTER MTG, 5/16 IN. SCREW SIZE MS35338-45 (96906)		EA	4	*	*	*	*	41	2
XDOZZ		ADAPTER: TACHOMETER DRIVE 5155819 (72582)	AB	EA	2					41	3
N PAOZZ		ADAPTER, TACHOMETER DRIVE 5117298 (72582)	C	EA	2	*	*	*	*	41	3
KFOZZ		GASKET: TACHOMETER DRIVE ADAPTER 5155816 (72582) (PART OF GASKET SET, FSN 5330-379-4301)	AB	EA	2					41	4
PAOZZ	6680-456-1585	SHAFT ASSEMBLY: TACHOMETER DRIVE W/SLING 5188439 (72582)	AB	EA	2	*	*	*	*	41	5
PAOZZ	2815-605-4944	SHAFT ASSEMBLY: TACHOMETER DRIVE 1569669 (72582)	AB	EA	3	*	*	*	*	41	5
XAOZZ		CABLE ASSEMBLY: TACHOMETER 1569106 (72582)	AB	EA	3					41	
N PAOZZ	2990-623-9924	SHAFT ASSEMBLY: TACHOMETER CABLE 1536316 (72582)	C	EA	4	*	*	*	*	41	
N PAOZZ		SHAFT ASSEMBLY: TACHOMETER DRIVE W/SLINGER 5177232 (72582)	C	EA	2	*	*	*	*	41	

	(1) SMR CODE	(2) FEDERAL STOCK NUMBER	(3) DESCRIPTION REF NUMBER & MFR CODE	USABLE ON CODE	(4) UNIT OF MEAS	(5) QTY INC IN UNIT	(6) 15-DAY ORGANIZATIONAL MAINTENANCE ALW (a) 1-5	(b) 6-20	(c) 21-50	(d) 51-100	(7) ILLUSTRATION (a) FIG. NO.	(b) ITEM NO.
	PAOZZ	6680-573-5240	ADAPTER, TACHOMETER: DRIVE CABLE 1536341 (72582)	AB	EA	1	*	*	*	*	31	6
	PAOZZ	6680-692-3965	ADAPTER ASSEMBLY: DRIVE CABLE 1565185 (72582)	AB	EA	1	*	*	*	*	31	6
N	PAOZZ	6680-019-4650	DRIVE, HEAD DUAL: LH TACHOMETER 1569407 (72582)	C	EA	4	*	*	*	*	31	
	PAOZZ	6680-474-6501	COUPLING: TACHOMETER SHAFT ASSEMBLY 846430 (72582)		EA	2	*	*	*	*	31	
	PAOZZ	5315-597-5387	KEY, MACHINE: TACHOMETER ADAPTER 1561509 (72582)		EA	2	*	*	*	*	31	
N	PAOZZ	6620-333-9253	CABLE, TACHOMETER, DRIVE: 5 FT LONG 1535530 (72582)	C	EA	4	*	*	*	*	31	
			GROUP 31 - TRANSMISSION OIL PUMP									
	PAOZZ	5310-732-0559	NUT, PLAIN, HEXAGON: PUMP MTG, 3/8-24 THD SIZE MS51968-8 (96906)		EA	16	*	*	*	*	32	1
R	PAOZZ	5306-021-2545	SCREW, CAP, HEXAGON HEAD: PUMP MTG, 3/8-24 THD SIZE, 5 1/2 IN. LG 186658 (72582)		EA	16	*	*	*	*	32	2
	PAOZZ	5310-637-9541	WASHER, LOCK: PUMP MTG, 3/8 IN. SCREW SIZE MS35338-46 (96906)		EA	16	*	*	*	*	32	3
	PAOZZ	5305-269-3211	SCREW, CAP, HEXAGON HEAD: PUMP MTG, 3/8-16 THD SIZE, 1 IN. LG MS90725-60 (96906)		EA	8	*	*	*	*	32	4
	PAOZZ	5310-637-9541	WASHER, LOCK: PUMP MTG, 3/8 IN. SCREW SIZE MS35338-46 (96906)		EA	8	*	*	*	*	32	5
	PCOZZ	5330-456-7192	GASKET: HYDRAULIC OIL PUMP 5150057 (72582)		EA	4	*	*	*	*	32	6
	PAOHH	2815-587-3399	PUMP, HYDRAULIC: D ENGINE 5112418 (72582) (COMPONENTS SAME AS PUMP, FSN 2815-587-3400, EXCEPT WHERE INDIVIDUAL COMPONENTS ARE ANNOTATED)	AB	EA	2	*	*	*	*	32	
	PAOZZ	2815-587-3400	PUMP, HYDRAULIC: B ENGINE 5112419 (72582)	AB	EA	2	*	*	*	*	32	
	XDOZZ		SCREW, VALVE: CAP VALVE 5194914 (72582)	AB	EA	4					32	23
	PAOZZ	2815-815-2938	GASKET: VALVE SCREW 120428 (72582)	AB	EA	4	*	*	*	*	32	24
	XDOZZ		SCREW, ADAPTER: VALVE, HYDRAULIC PUMP 5194918 (72582)	AB	EA	4					32	25
	PAOZZ	2815-815-2938	GASKET: VALVE SCREW 120428 (72582)		EA	4	*	*	*	*	32	26
	PAOZZ	4820-785-5228	SPRING, FLOW CONTROL VALVE 5194913 (72582)	AB	EA	4	*	*	*	*	32	27
	PAOZZ	2815-785-5230	VALVE ASSEMBLY, RELIEF: HYDRAULIC PUMP 5195508 (72582)	AB	EA	4	*	*	*	*	32	28
	PAOZZ	3020-517-3167	GEAR, SPUR: PUMP DRIVE 5171922 (72582)	AB	EA	4	*	*	*	*	32	31

(1) SMR CODE	(2) FEDERAL STOCK NUMBER	(3) DESCRIPTION REF NUMBER & MFR CODE	USABLE ON CODE	(4) UNIT OF MEAS	(5) QTY INC IN UNIT	(6) 15-DAY ORGANIZATIONAL MAINTENANCE ALW (a) 1-5	(b) 6-20	(c) 21-50	(d) 51-100	(7) ILLUSTRATION (a) FIG. NO.	(b) ITEM NO.
PAOZZ	2815-416-4168	INSERT, FLEXIBLE COUPLING: HYDRAULIC PUMP 5160408 (72582)	AB	EA	4	*	*	*	*	42	32
R PAOZZ	5365-263-2710	RING, RETAINING: PUMP COUPLING 2070610 (72582)	AB	EA	4	*	*	*	*	42	33
PAOZZ	3020-517-3167	GEAR, SPUR: PUMP DRIVE 5171922 (72582)	AB	EA	4	*	*	*	*	42	34
PAOZZ	4730-246-9219	ELBOW, STREET: HYDRAULIC TRANSMISSION PUMP 108687 (72582)		EA	2	*	*	*	*		
XDOZZ		NIPPLE, PIPE: HYDRAULIC TRANSMISSION PUMP 5182961 (72582)		EA	2						
PCOZZ	4720-461-3767	HOSE, FLEXIBLE: OIL COOLER TO SELECTOR VALVE 5112499 (72582)	AB	EA	2	*	*	*	*		
XDOZZ		ADAPTER, OIL COOLER HOSE 5186431 (72582)		EA	2						
PAOZZ	5306-226-4827	BOLT, MACHINE: SELECTOR VALVE TUBE, 5/16-18 THD SIZE, 1 IN. LG MS90728-34 (96906)		EA	4	*	*	*	*		
PAOZZ	5310-407-9566	WASHER, LOCK: SELECTOR VALVE TUBE, 5/16 IN. SCREW SIZE MS35338-45 (96906)		EA	4	*	*	*	*		
PAOZZ	4730-613-9339	ELBOW, SELECTOR VALVE TUBE 109429 (72582)		EA	2	*	*	*	*		
PAOZZ	4730-193-0875	BUSHING, REDUCING PIPE: SELECTOR VALVE TUBE, 3/4 IN. TO 1/2 IN. 144034 (72582)		EA	2	*	*	*	*		
N PAOZZ	5305-269-3211	SCREW, CAP, HEXAGON HEAD: PUMP MTG, 3/8-16 THD SIZE, 1 IN. LG MS90725-60 (96906)	C	EA	4	*	*	*	*	43	1
N PAOZZ	5310-637-9581	WASHER, LOCK: PUMP MTG, 3/8 IN. SCREW SIZE MS35338-46 (96906)	C	EA	4	*	*	*	*	43	2
N PAOZZ	5310-080-6004	WASHER, PLAIN: PUMP MTG, 3/8 IN. SCREW SIZE MS27183-14 (72582)	C	EA	4	*	*	*	*	43	3
N PAOZZ	4320-689-3036	PUMP HYDRAULIC: D ENGINE 5141732 (72582)	C	EA	2	*	*	*	*	43	4
N PAOHH	4320-689-3037	PUMP HYDRAULIC: B ENGINE 5140373 (72582)	C	EA	2	*	*	*	*	43	4
N PCOZZ	5330-695-2157	GASKET: HYDRAULIC PUMP TO ADAPTER 5188955 (72582)		EA	2	*	*	*	*	43	5
N PAOZZ	4320-557-9394	HUB: BLOWER AND HYDRAULIC PUMP DRIVE 5127670 (72582)	C	EA	1	*	*	*	*	43	6
N PAOZZ	4320-557-9395	HUB: HYDRAULIC, PUMP DRIVE 5143768 (72582)	C	EA	2	*	*	*	*	43	6
N PAOZZ	4320-689-3040	ADAPTER, HYDRAULIC PUMP 5140397 (72582)	C	EA	2	*	*	*	*		
N PAOZZ	3040-494-3068	SHAFT: BLOWER AND HYDRAULIC PUMP DRIVE 5189454 (72582)	C	EA	1	*	*	*	*		
N PAOZZ	5315-010-6749	KEY, WOODRUFF 106749 (72582)	C	EA	1	*	*	*	*		
N PAOZZ	4730-196-2072	COUPLING: HYDRAULIC PUMP DRIVE 5145282 (72582)	C	EA	2	*	*	*	*		

	(1) SMR CODE	(2) FEDERAL STOCK NUMBER	(3) DESCRIPTION REF NUMBER & MFR CODE	USABLE ON CODE	(4) UNIT OF MEAS	(5) QTY INC IN UNIT	(6) 15-DAY ORGANIZATIONAL MAINTENANCE ALW (a) 1-5	(b) 6-20	(c) 21-50	(d) 51-100	(7) ILLUSTRATION (a) FIG. NO.	(b) ITEM NO.
N	PAOZZ	5310-363-8157	NUT, HUB TO PUMP SHAFT 451070 (72582)	C	EA	2	*	*	*	*		
N	PCOZZ	4720-557-9632	HOSE ASSEMBLY, FLEXIBLE: PUMP TO FILER, 45 IN. LG 5144722 (72582)	C	EA	1	*	*	*	*		
N	PAOZZ	4710-457-8623	TUBE, OIL FILTER: D ENGINE 5128980 (72582)	C	EA	1	*	*	*	*		
N	PCOZZ	4720-557-9629	HOSE ASSEMBLY, FLEXIBLE: PUMP TO FILTER, 30 IN. LG 5144539 (72582)	C	EA	1	*	*	*	*		
N	PAOZZ	5305-225-8498	SCREW, CAP, HEXAGON HEAD: CLIPS TO BRACKET MS90725-33 (96906)	C	EA	4	*	*	*	*		
N	PAOZZ	5310-809-3078	WASHER, PLAIN 106261 (72582)		EA	8	*	*	*	*		
N	PAOZZ	5310-407-9566	WASHER, LOCK: 5/16 IN. SCREW SIZE MS35338-45 (96906)	C	EA	4	*	*	*	*		
N	PAOZZ	5310-880-7744	NUT, PLAIN, HEXAGON: 5/16-18 THD SIZE MS51967-5 (96906)	C	EA	4	*	*	*	*		
N	PAOZZ	4730-188-1877	NIPPLE 141504 (72582)	C	EA	2	*	*	*	*		
N	XDOZZ		BRACKET COOLER 5181339 (72582)	C	EA	4						
N	XDOZZ		CLIP HOSE 2236474 (72582)	C	EA	8						
N	PCOZZ	4720-557-9445	HOSE, FLEXIBLE: OIL COOLER SELECTOR 5144541 (72582)	C	EA	2	*	*	*	*		
N	PAOZZ	4730-188-1877	NIPPLE, PIPE: 1/2-14 THD SIZE, 1 1/2 IN. LG 141504 (72582)	C	EA	1	*	*	*	*		
N	PAOZZ	4730-249-3917	ELBOW: 1/2 IN., 90 DEG, PIPE 119098 (72582)	C	EA	1	*	*	*	*		
N	PAOZZ	4730-027-0774	CONNECTOR: 5/8 IN., TUBE X 1/2 IN. 116487 (72582)	C	EA	1	*	*	*	*		
N	XDOZZ		CLIP, PUMP TO FILTER HOSES 2236474 (72582)	C	EA	3						
N	PAOZZ	4710-457-8624	TUBE: RH, OIL FLYWHEEL HOUSING 5180190 (72582)	C	EA	1	*	*	*	*		
N	PAOZZ	4710-457-8625	TUBE: LH, OIL FLYWHEEL HOUSING 5180191 (72582)	C	EA	1	*	*	*	*		
N	PCOZZ	4720-980-1521	HOSE: OIL FLYWHEEL HOUSING 5112181 (72582)	C	EA	2	*	*	*	*		
N	PAOZZ	4730-585-8394	CLAMP, HOSE 2337379 (72582)		EA	2	*	*	*	*		
N	PAOZZ	5305-068-0511	SCREW, CAP, HEXAGON HEAD: 3/8-16 THD SIZE, 1 1/4 IN. LG MS90728-62 (96906)	C	EA	4	*	*	*	*		
N	PAOZZ	5310-637-9541	WASHER, LOCK: 3/8 IN. MS35338-46 (96906)	C	EA	4	*	*	*	*		
N	PCOZZ	2815-588-3111	GASKET: OIL CONNECTOR TUBE 5173762 (72582)	C	EA	2	*	*	*	*		
	KFOZZ		GASKET: OIL INLET TUBE, CONTROL VALVE 5171147 (72582) (PART OF KIT, FSN 5330-379-4301)		EA	2						

(1) SMR CODE	(2) FEDERAL STOCK NUMBER	(3) DESCRIPTION REF NUMBER & MFR CODE	USABLE ON CODE	(4) UNIT OF MEAS	(5) QTY INC IN UNIT	(6) 15-DAY ORGANIZATIONAL MAINTENANCE ALW (a) 1-5	(b) 6-20	(c) 21-50	(d) 51-100	(7) ILLUSTRATION (a) FIG. NO.	(b) ITEM NO.
PAOZZ	5340-282-7509	CLAMP, LOOP: SELECTOR VALVE TUBE MS21333-62 (96906)	AB	EA	4	*	*	*	*		
XDOZZ		CLIP: OIL TUBE, SELECTOR VALVE 5186803 (72582)	AB	EA	4						
PAOZZ		SCREW, CAP, HEXAGON HEAD: SELECTOR VALVE, TUBE CLAMP MS90725-68 (96906)	AB	EA	4	*	*	*	*		
XDOZZ		SPACER, SLEEVE: TUBE CLIP, SELECTOR VALVE 5160425 (72582)	AB	EA	4						
PAOZZ	4710-457-8621	TUBE: OIL FILTER, B ENGINE, HYDRAULIC PUMP TO COOLER 5128982 (72582)		EA	1	*	*	*	*		
PAOZZ	4710-457-8623	TUBE: OIL FILTER, D ENGINE, HYDRAULIC PUMP TO COOLER 5128980 (72582)		EA	1	*	*	*	*		
PCOZZ	4720-461-3768	HOSE ASSEMBLY: FLEXIBLE, PUMP TO FILTER 5188697 (72582)	AB	EA	1	*	*	*	*		
PCOZZ	4720-932-4732	HOSE ASSEMBLY: FLEXIBLE, PUMP TO FILTER 5114071 (72582)	AB	EA	1	*	*	*	*		
PCOZZ	2815-389-6042	SEAL: 5/8 IN., TUBE SEALASTIC 5183565 (72582)		EA	4	*	*	*	*		
PAOZZ	4730-253-4414	ELBOW: PUMP TO OIL COOLER TUBE, 5/8 IN. TUBE, 90 DEG MS39230-4 (96906)		EA	4	*	*	*	*		
PAOZZ	4730-193-0875	BUSHING: PUMP TO OIL COOLER TUBE, 3-4 IN. TO 1-2 IN. 144034 (72582)		EA	4	*	*	*	*		
PAOZZ	4730-253-4414	ELBOW, STREET: PUMP TO OIL COOLER TUBE MS39230-4 (96906)		EA	4	*	*	*	*		
PAOZZ	4730-613-9339	ELBOW: PUMP TO OIL COOLER TUBE 109429 (72582)		EA	2	*	*	*	*		
PAOZZ	4730-200-0911	NUT, TUBE COUPLING: PUMP TO OIL COOLER TUBE 5183566 (72582)	AB	EA	4	*	*	*	*		
		GROUP 32 - POWER TAKE-OFF ASSEMBLY									
PAOZZ	5305-725-2317	SCREW, CAP, HEXAGON HEAD: LEVER, 3/8-16 THD SIZE, 1 1/2 IN. LG MS90728-64 (96906)		EA	2	*	*	*	*	45	1
ADOZZ		LEVER, CLUTCH, HAND CONTROL 3290211 (72582)		EA	2					45	3
PAOZZ	5305-988-1721	SCREW, MACHINE: INSPECTION COVER MTG, 1/4-20 THD SIZE, 3/8 IN. LG MS35206-277 (96906)		EA	4	*	*	*	*	45	4
XDOZZ		COVER, CLUTCH: INSPECTION HOLE 5192157 (72582)		EA	2					45	5
PAOZZ	5330-602-4314	GASKET: INSPECTION HOLE COVER 5192415 (72582)		EA	2	*	*	*	*	45	6
PAOZZ	5310-136-5712	NUT: HOSE, 5/8-18 THD SIZE 122366 (72582)		EA	2	*	*	*	*	45	7
PAOZZ	4730-050-4208	FITTING, LUBRICATION: CLUTCH, 1/8-27 THD SIZE MS15003-1 (96906)		EA	2	*	*	*	*	45	8

(1)	(2)	(3)	(4)	(5)	(6)				(7)	
		DESCRIPTION			15-DAY ORGANIZATIONAL MAINTENANCE ALW				ILLUSTRATION	
SMR CODE	FEDERAL STOCK NUMBER	REF NUMBER & MFR CODE / USABLE ON CODE	UNIT OF MEAS	QTY INC IN UNIT	(a) 1-5	(b) 6-20	(c) 21-50	(d) 51-100	(a) FIG. NO.	(b) ITEM NO.
PAOZZ	5305-688-2111	SCREW, CAP, HEXAGON HEAD: POWER TAKE-OFF MTG, 3/8-16 THD SIZE, 1 3/4 IN. LG MS9728-63 (96906)	EA	6	•	•	•	•	45	
		GROUP 33 - ALTERNATOR, REGULATOR AND VOLTAGE PROTECTOR								
N PAOFH	2920-150-0038	ALTERNATOR: 70 AMP, 28.5V 8SA3006P (31211) (COMPONENTS SAME AS ALTERNATOR, FSN 2920-477-6103, EXCEPT WHERE INDIVIDUAL COMPONENTS ARE ANNOTATED) C	EA	1	•	•	•	•	46	
C PAOFH	2920-477-6103	GENERATOR ALTERNATOR: 70 AMP, 28V 10-90 (31211) AB	EA	1	•	•	•	•	46	
PCCZZ	3030-528-4626	BELT, V: ALTERNATOR MS39243-25 (96906) A	EA	2	•	•	•	•	46	1
PCCZZ	3030-529-0479	BELT, V: ALTERNATOR MS39256851 (96906) B	EA	2	•	•	•	•	46	1
N PCCZZ	3030-580-9453	BELT, V MATCHED SET: ALTERNATOR AND BILGE PUMP MS39256-2855 (96906) C	EA	6	•	•	•	•	46	1
PAOZZ	5310-168-6456	NUT, PLAIN, HEXAGON: TERMINAL STUD, NO. 10-24 THD SIZE 20-119 (31211)	EA	6	•	•	•	•	46	24
PAOZZ	5310-168-6374	WASHER, LOCK: TERMINAL STUD, NO. 10 SCREW SIZE 20-111 (31211)	EA	1	•	•	•	•	46	25
C PAOZZ	5306-351-4461	WASHER, FLAT: TERMINAL STUD, 13/64 IN. ID, 7/16 IN. OD 20-54 (31211) AB	EA	2	•	•	•	•	46	26
C PAOZZ	5970-410-2546	WASHER, INSULATING: TERMINAL STUD 15-3 (31211)	EA	1	•	•	•	•	46	27
PAOZZ	5305-175-5107	SCREW, THREAD FORMING: REAR COVER MTG, NO. 8-32 THD SIZE, 3/4 IN. LG 20-117 (31211)	EA	2	•	•	•	•	46	28
C PAOZZ	5306-168-6385	SCREW, SELF-LOCKING: TERMINAL, NO. 10-24 THD SIZE, 3/4 IN. LG 20-135 (31211)	EA	1	•	•	•	•	46	29
C PAOZZ	2920-477-6107	WIRE, FIELD: INTERNAL 16-28 (31211)	EA	1	•	•	•	•	46	30
C PAOZZ	5310-168-6371	WASHER, FLAT: TERMINAL STUD, 17/64 IN. ID, 9/16 IN. OD 20-109 (31211)	EA	3	•	•	•	•	46	31
C PAOZZ	2920-133-3295	INSULATOR, SCREW 15-7 (31211)	EA	3	•	•	•	•	46	32
XDOZZ		COVER: REAR HOUSING 14-40 (31211)	EA	1					46	33
PCOZZ	6115-010-2822	GASKET: FELT COVER 3-14 (31211)	EA	1	•	•	•	•	46	34
C PAOZZ	5305-175-5104	SCREW, THREAD FORMING: BRUSH MTG, NO. 8-32 THD SIZE, 1/2 IN. LG 20-116 (31211)	EA	3	•	•	•	•	46	35
C PAOZZ	5970-410-2545	INSULATOR BRUSH: SHUNT LEAD 15-8 (31211) AB	EA	1	•	•	•	•	46	36
C PAOZZ		SCREW, SELF-LOCKING: BRUSH LEAD: NO. 4-40 THD SIZE, 1/4 IN. LG 20-72 (31211) AB	EA	2	•	•	•	•	46	37
C PAOZZ	5305-175-5109	SCREW, BRUSH LEAD: NO. 4-40 THD SIZE, 1/4 IN. LG 20-156 (31211) C	EA	1	•	•	•	•	46	37

(1)	(2)	(3)	(4)	(5)	(6)				(7)	
SMR CODE	FEDERAL STOCK NUMBER	DESCRIPTION REF NUMBER & MFR CODE / USABLE ON CODE	UNIT OF MEAS	QTY INC IN UNIT	15-DAY ORGANIZATIONAL MAINTENANCE ALW (a) 1-5	(b) 6-20	(c) 21-50	(d) 51-100	ILLUSTRATION (a) FIG. NO.	(b) ITEM NO.
PAOZZ	5977-689-6392	BRUSH, ELECTRICAL CONTACT 3-12 (31211)	EA	1	*	*	*	*	46	38
C PAOZZ	5310-173-0116	NUT, PLAIN, HEXAGON: CAPACITOR AND ISOLATION DIODE MTG, 1/4-28 THD SIZE 20-115 (31211)	EA	3	*	*	*	*	46	39
C PAOZZ		CAPACITOR: 10 MFD 2-4 (31211)	EA	1	*	*	*	*	46	40
C PAOZZ	5310-168-6388	WASHER, LOCK: CAPACITOR AND ISOLATION DIODE MTG, 1/4 IN. SCREW SIZE 20-113 (31211)	EA	2	*	*	*	*	46	41
C PAOZZ	5310-168-6360	WASHER, FLAT: ISOLATION DIODE MTG 20-110 (31211)	EA	3	*	*	*	*	46	42
C PAOZZ	5310-456-7172	WASHER, NONMETALLIC: ISOLATION DIODE MTG 15-10 (31211)	EA	1	*	*	*	*	46	43
C PAOZZ	5306-166-1792	CAP, STUD: REAR HOUSING 20-68 (31211)	EA	3	*	*	*	*	46	44
PAOZZ	5310-168-6456	NUT, PLAIN, HEXAGON: TERMINAL STUD, NO. 10-24 THD SIZE 20-119 (31211)	AB EA	1	*	*	*	*	46	45
C PAOZZ	5306-351-4461	WASHER, FLAT: TERMINAL STUD, 13/64 IN. ID, 7/16 IN. OD 20-54 (31211)	AB EA	1	*	*	*	*	46	46
C PAOZZ	5970-067-8407	WASHER, NONMETALLIC: TERMINAL SCREW 15-11 (31211)	EA	3	*	*	*	*	46	47
C PAOZZ	2920-477-6108	REGULATOR: ENGINE GENERATOR 5-57 (31211)	AB EA	2	*	*	*	*		
PAOZZ	6150-406-3493	CABLE ASSEMBLY: REGULATOR 16-71 (31211)	EA	2	*	*	*	*		
C MOOZZ		CABLE, RESISTOR: LEAD 16-70 (31211) MANUFACTURE FROM:	AB EA	1						
C PCOZZ	2920-477-6109	SHIELDED CABLE, 16 GA, SHOF3, AS REQUIRED	FT		*	*	*	*		
C MOOZZ		CABLE, FIELD SUPPLY 16-69 (31211) MANUFACTURE FROM:	AB EA	1						
C PCOZZ	2920-177-6109	SHIELDED CABLE, 16 GA, SHOF3, AS REQUIRED	FT		*	*	*	*		
PAOZZ	5905-221-8099	RESISTOR, EXCITATION 17-10 (31211)	EA	2	*	*	*	*		
PAOZZ	5920-251-2486	PROTECTOR: VOLTAGE ALTERNATOR 9-14 (31211)	EA	1	*	*	*	*		
C PCOZZ	5975-458-0093	BOOT: DUST AND MOISTURE SEAL 16-31 (31211)	AB EA	4	*	*	*	*		
C PCOZZ	2920-786-5252	LEAD, ELECTRICAL: REGULATOR 5169423 (72582)	AB EA	1	*	*	*	*		
C PCOZZ	5340-456-6979	MOUNT, SHOCK ABSORBER: REGULATOR M595 (70485)	EA	8	*	*	*	*		
N XDOZZ		ARM, ADJUSTING: ALTERNATOR 18-25 (31211)	C EA	1						
N PAOZZ	5310-087-7493	WASHER, FLAT: ALTERNATOR BRACKET, BOTTOM, 3/8 IN. SCREW SIZE MS27183-13 (96906)	C EA	8	*	*	*	*		

(1)	(2)	(3)	(4)	(5)	(6)				(7)	
		DESCRIPTION			15-DAY ORGANIZATIONAL MAINTENANCE ALW				ILLUSTRATION	
SMR CODE	FEDERAL STOCK NUMBER	REF NUMBER & MFR CODE / USABLE ON CODE	UNIT OF MEAS	QTY INC IN UNIT	(a) 1-5	(b) 6-20	(c) 21-30	(d) 31-100	(a) FIG. NO.	(b) ITEM NO.
N PAOZZ	5305-071-1776	SCREW, CAP, HEXAGON HEAD: ALTERNATOR MTG, 1/2-13 THD SIZE, 4 IN. LG MS90725-123 (96906) C	EA	2	•	•	•	•		
N PAOZZ	5306-225-8497	SCREW, CAP, HEXAGON HEAD: BILGE, PUMP GUARD MTG, 5/16-18 THD SIZE, 3/4 IN. LG MS90725-32 (96906) C	EA	3	•	•	•	•		
N PAOZZ	5310-732-0558	NUT, PLAIN, HEXAGON: ALTERNATOR GUARD, TOP MS51967-18 (96906) C	EA	2	•	•	•	•		
N PAOZZ	5310-768-0318	NUT, PLAIN, HEXAGON: ALTERNATOR MTG, 1/2-13 THD SIZE MS51967-14 (96906) C	EA	2	•	•	•	•		
		GROUP 34 - ELECTRIC CRANKING MOTOR								
R PAOFH	2920-777-3392	MOTOR, CRANKING: ELECTRICAL, RD ENGINE 1108850 (16764)	EA	1	•	•	•	•	47	
XBOZZ		COVER, BAND 1906016 (16764)	EA	1					47	1
XBOZZ		BOLT, MACHINE: COMMUTATOR END FRAME MTG 1914869 (16764)	EA	4					47	2
XDOZZ		WASHER, LOCK: COMMUTATOR END FRAME MTG 9421423 (16764)	EA	4					47	3
PAOZZ	4730-011-8831	PLUG, PIPE 118831 (16764)	EA	1	•	•	•	•	47	
PAOZZ	5340-282-1668	PLUG, END 453894 (16764)	EA	1	•	•	•	•	47	6
XDOZZ		WICK: 1916439 (16764)	EA	1					47	
XBOZZ		NUT, PLAIN, HEXAGON: TERMINAL STUD, 7/16 IN, THK 9413509 (16764)	EA	1					47	7
XBOZZ		WASHER, LOCK: FIELD TERMINAL STUD 9421427 (16764)	EA	2					47	8
XBOZZ		NUT, PLAIN, HEXAGON: TERMINAL STUD, 5/16 IN, THK 8414412 (16764)	EA	1					47	9
XBOZZ		WASHER: FIELD TERMINAL STUD 811912 (16764)	EA	2					47	10
PAOZZ	5970-486-8421	INSULATOR, BRUSH PLATE 1907471 (16764)	EA	1	•	•	•	•	47	11
PAOZZ	5305-889-3002	SCREW, MACHINE: BRUSH LEAD MS35206-242 (96906)	EA	8	•	•	•	•	47	12
PAOZZ	5310-999-2294	WASHER, LOCK: BRUSH LEAD, ATTACHING SCREW 453844 (16764)	EA	8	•	•	•	•	47	13
PAOZZ	5977-237-1596	BRUSH, ELECTRICAL CONTACT 1906902 (16764)	EA	8	•	•	•	•	47	14
PAOZZ	5305-796-1719	SCREW, BRUSH HOLDER 1968696 (16764)	EA	2	•	•	•	•	47	18
PAOZZ	5310-045-3296	WASHER, LOCK: BRUSH HOLDER MS35338-43 (96906)	EA	8	•	•	•	•	47	19
PAOZZ	5305-363-3582	SCREW, BRUSH HOLDER: LONG, INSULATED 1904982 (16764)	EA	2	•	•	•	•	47	20

(1) SMR CODE	(2) FEDERAL STOCK NUMBER	(3) DESCRIPTION REF NUMBER & MFR CODE / USABLE ON CODE	(4) UNIT OF MEAS	(5) QTY INC IN UNIT	(6) 15-DAY ORGANIZATIONAL MAINTENANCE ALW (a) 1-5	(b) 6-20	(c) 21-50	(d) 51-100	(7) ILLUSTRATION (a) FIG. NO.	(b) ITEM NO.
R PAOZZ	5360-734-8954	SPRING, BRUSH 1904981 (16764)	EA	8	*	*	*	*	47	21
XDOZZ		BRUSH HOLDER 1907475 (16764)	EA	4					47	22
PAOZZ	5970-496-9859	BUSHING, INSULATING: TERMINAL STUD 1931680 (16764)	EA	1	*	*	*	*	47	23
PAOZZ	5305-371-5138	SCREW, BRUSH HOLDER 1928500 (16764)	EA	2	*	*	*	*	47	
PAOZZ	5305-105-1207	SCREW, BRUSH HOLDER 1918580 (16764)	EA	2	*	*	*	*	47	
C XBOZZ		WASHER, FLAT 1913080 (16764)	EA	4					47	
PAOZZ		SCREW, CAP, SELF-LOCKING 454336 (16764)	EA	12	*	*	*	*	47	25
XBOZZ		WASHER, LOCK: DRIVE HOUSING 9421423 (16764)	EA	12					47	26
PAOZZ	4730-011-8831	PLUG, PIPE: DRIVE END 118831 (16764)	EA	1	*	*	*	*	47	
PAOZZ	2920-652-7998	DRIVE, BENDIX 1938993 (16764)	EA	1	*	*	*	*	47	36
XDOZZ		VENTILATOR 1928510 (16764)	EA	2					47	39
XBOZZ		NUT, PLAIN, HEXAGON: TERMINAL STUD, 7/16 IN. THK 9413509 (16764)	EA	1					47	40
XBOZZ		WASHER, LOCK: TERMINAL STUD 9421427 (16764)	EA	2					47	41
XBOZZ		NUT, PLAIN, HEXAGON: TERMINAL STUD, 5/16 IN. THK 9414418 (16764)	EA	1					47	42
XDOZZ		INSULATOR, TERMINAL STUD 1931671 (16764)	EA	1					47	43
XDOZZ		WASHER, FLAT 1907474 (16764)	EA	2					47	
PAOZZ	5970-606-8321	INSULATOR, TERMINAL STUD 1931671 (16764)	EA	1	*	*	*	*	47	
XDOZZ		COLLAR, SPACER 1912387 (16764)	EA	1					47	
XBOZZ		WASHER, SPACER 1912386 (16764)	EA	1					47	
XBOZZ		WASHER, SPACER, STEEL 1907507 (16764)	EA	1					47	
PAOFH	2920-640-7462	MOTOR, CRANKING: ELECTRICAL, LB ENGINE 1108890 (16764)	EA	1	*	*	*	*	48	
XBOZZ		COVER, BAND 1908016 (16764)	EA	1					48	1
XBOZZ		SCREW, CAP, HEXAGON HEAD: COMMUTATOR END FRAME MTG 1907613 (16764)	EA	4					48	2
XDOZZ		WASHER, LOCK: COMMUTATOR END FRAME MTG 1904988 (16764)	EA	4					48	3
PAOZZ	4730-011-8831	PLUG, PIPE 118831 (16764)	EA	1	*	*	*	*	48	

(1) SMR CODE	(2) FEDERAL STOCK NUMBER	(3) DESCRIPTION REF NUMBER & MFR CODE USABLE ON CODE	(4) UNIT OF MEAS	(5) QTY INC IN UNIT	(6) 15-DAY ORGANIZATIONAL MAINTENANCE ALW (a) 1-5	(b) 6-20	(c) 21-50	(d) 51-100	(7) ILLUSTRATION (a) FIG. NO.	(b) ITEM NO.
PAOZZ	5340-282-1668	PLUG, END 453894 (16764)	EA	1	•	•	•	•	48	6
XDOZZ		VICK 1916439 (16764)	EA	1						
XBOZZ		NUT, PLAIN, HEXAGON: TERMINAL STUD MS35691-805 (96906)	EA	1					48	7
XBOZZ		WASHER, LOCK: TERMINAL STUD 1914648 (16764)	EA	2					48	9
XBOZZ		NUT, PLAIN, HEXAGON: TERMINAL STUD MS35690-805 (96906)	EA	1					48	9
XBOZZ		WASHER, FLAT: TERMINAL STUD 1904998 (16764)	EA	1					48	10
PAOZZ	5970-486-8421	INSULATOR, BRUSH PLATE 1907471 (16764)	EA	1	•	•	•	•	48	11
PAOZZ	5305-984-6191	SELF, SELF-LOCKING: BRUSH LEAD, NO. 8-32 THD SIZE, 3/8 IN. LG MS35206-243 (96906)	EA	8	•	•	•	•	48	12
PAOZZ	5310-045-3299	WASHER, LOCK: BRUSH LEAD, NO. 8 SCREW SIZE MS35338-42 (96906)	EA	8	•	•	•	•	48	13
PAOZZ	5977-237-1596	BRUSH, ELECTRICAL CONTACT 1906902 (16764)	EA	8	•	•	•	•	48	14
PAOZZ	5305-543-2753	SCREW, SELF-LOCKING: BRUSH HOLDER MS35266-61 (96906)	EA	2	•	•	•	•	48	18
PAOZZ	5310-045-3296	WASHER, LOCK: BRUSH HOLDER MS35338-43 (96906)	EA	8	•	•	•	•	46	19
PAOZZ	5305-363-3582	SCREW, SELF-LOCKING: BRUSH HOLDER 1904982 (16764)	EA	5	•	•	•	•	48	20
PAOZZ	5360-734-8954	SPRING, BRUSH 1904981 (16764)	EA	8	•	•	•	•	48	21
XDOZZ		HOLDER, BRUSH 1907475 (16764)	EA	4					48	22
PAOZZ	5970-496-9859	BUSHING, INSULATING: TERMINAL STUD 1931680 (16764)	EA	1	•	•	•	•	48	23
PAOZZ	5305-371-5138	SCREW, SELF-LOCKING: BRUSH HOLDER 1908698 (16764)	EA	2	•	•	•	•	48	
PAOZZ	5305-614-0247	SCREW, SELF-LOCKING: BRUSH HOLDER MS35266-64 (96906)	EA	2	•	•	•	•	48	
XBOZZ		WASHER, FLAT 1913080 (16764)	EA	4					48	
PAOZZ	5305-005-0837	SCREW, SELF-LOCKING 1907477 (16764)	EA	12	•	•	•	•	48	25
XBOZZ		WASHER, LOCK: DRIVE HOUSING 1904988 (16764)	EA	12					48	26
PAOZZ	4730-011-8831	PLUG, PIPE, DRIVE END 118831 (16764)	EA	1	•	•	•	•	48	
PAOZZ	4730-011-8831	PLUG, PIPE: CENTER BEARING 118831 (16764)	EA	1	•	•	•	•	48	
PAOZZ	2920-398-9830	DRIVE, BENDIX A3163 (72850)	EA	1	•	•	•	•	48	36
XDOZZ		VENTILATOR, FIELD FRAME 1928510 (16764)	EA	2					48	39
XBOZZ		NUT, PLAIN, HEXAGON: FIELD TERMINAL MS35691-805 (96906)	EA	1					48	40

(1) SMR CODE	(2) FEDERAL STOCK NUMBER	(3) DESCRIPTION REF NUMBER & MFR CODE	USABLE ON CODE	(4) UNIT OF MEAS	(5) QTY INC IN UNIT	(6) 15-DAY ORGANIZATIONAL MAINTENANCE ALW (a) 1-5	(b) 6-20	(c) 21-50	(d) 51-100	(7) ILLUSTRATION (a) FIG. NO.	(b) ITEM NO.
XBOZZ		WASHER, LOCK: FIELD TERMINAL, 1/2 IN. SCREW SIZE FFW84CLASSASTYLE2 (81348)		EA	2					48	41
XBOZZ		NUT, PLAIN, HEXAGON: FIELD TERMINAL MS35690-805 (96906)		EA	1					48	42
XDOZZ		INSULATOR: FIELD TERMINAL STUD 1931671 (16764)		EA	1					48	43
XDOZZ		WASHER, INSULATING TERMINAL STUD, COMMUTATOR END, 7/8 IN. OD 1907474 (16764)		EA	2					48	
PAOZZ	5970-606-8321	INSULATOR: TERMINAL STUD 1931671 (16764)		EA	1	*	*	*	*	48	
XDOZZ		COLLAR, SPACER 1912387 (16764)		EA	1					48	
XBOZZ		WASHER, SPACER 1912386 (16764)		EA	1					48	
XBOZZ		WASHER, SPACER, STEEL 1907507 (16764)		EA	1					48	
PAOZZ	5310-734-8923	WASHER, LOCK: BRUSH LEAD 1914107 (16764)		EA	3	*	*	*	*	48	
PAOZZ	5310-734-8905	WASHER, FLAT 1904987 (16764)		EA	4	*	*	*	*	48	
PAOZZ	2920-276-9263	RELAY, SOLENOID: STARTING MOTOR 1118092 (72582)	A	EA	1	*	*	*	*	48	
PAOZZ	5305-068-0505	SCREW, CAP, HEXAGON HEAD: RELAY MTG MS90726-5 (96906)	A	EA	4	*	*	*	*	48	
PAOZZ	5310-637-9541	WASHER, LOCK: STARTER RELAY MTG MS35338-46 (96906)	A	EA	4	*	*	*	*	48	
PAOZZ	5310-809-4058	WASHER, STARTER MS27183-10 (96906)	A	EA	4	*	*	*	*	48	
PAOZZ	5310-297-8836	NUT, PLAIN, HEXAGON: STARTER RELAY MTG 122161 (72582)	A	EA	4	*	*	*	*	48	
XDOZZ		BRACKET, STARTER: RELAY MTG 5132866 (72582)	A	EA	1					48	
PAOZZ	5306-637-9623	BOLT, MACHINE: 3/8-16 THD SIZE, 4 IN. LG 186285 (72582)		EA	4	*	*	*	*	48	
PAOZZ	5310-261-7340	WASHER, LOCK: 3/8 IN. MS35338-8 (96906)	A	EA	4	*	*	*	*	48	

(1) SMR CODE	(2) FEDERAL STOCK NUMBER	(3) DESCRIPTION REF NUMBER & MFR CODE	USABLE ON CODE	(4) UNIT OF MEAS	(5) QTY INC IN UNIT	(6) 15-DAY ORGANIZATIONAL MAINTENANCE ALW (a) 1-5	(b) 6-20	(c) 21-50	(d) 51-100	(7) ILLUSTRATION (a) FIG. NO.	(b) ITEM NO.
		GROUP 35 - HYDRAULIC STARTING PIPING SYSTEM									
PAOZZ	6685-015-3211	GAGE, PRESS: ACCUMULATOR G0200636 (96906)	A	EA	2	*	*	*	*	49	1
HOOZZ		HOSE: ACCUMULATOR TO SOLENOID VALVE, 100 IN. LG MMC60-58 (98042) MANUFACTURE FROM:	A	EA	1					49	2
PCOZZ	4720-269-2612	HOSE, 3/8 IN. ID, 9 FT REQUIRED		FT		*	*	*	*	49	
HOOZZ		HOSE: 6 FT LG MMC60-62 (98042) MANUFACTURE FROM:	A	EA	2					49	3
PCOZZ	4720-067-0454	HOSE, 1/2 IN. ID, 6 FT REQUIRED 1503-8 (01276)		FT		*	*	*	*	49	
HOOZZ		HOSE: 5 FT, 4 IN. LG MMC60-56 (98042) MANUFACTURE FROM:	A	EA	1					49	4
PCOZZ	4720-269-2615	HOSE, 3/8 IN. ID, 5 FT, 4 IN. REQUIRED		FT		*	*	*	*	49	
HOOZZ		HOSE: 18 IN. LG MMC60-52 (98042) MANUFACTURE FROM:	A	EA	1					49	5
PCOZZ	4720-269-2615	HOSE, 3/8 IN. ID, 18 IN. REQUIRED		FT		*	*	*	*	49	
HOOZZ		HOSE: 4 FT, 8 IN. LG MMC60-55 (98042) MANUFACTURE FROM:	A	EA	1					49	6
PCOZZ	4720-269-2615	HOSE, 3/8 IN. ID, 4 FT, 8 IN. REQUIRED		FT		*	*	*	*	49	
HOOZZ		HOSE: 9 FT LG MMC60-63 (98042) MANUFACTURE FROM:	A	EA	1					49	7
PCOZZ	4720-067-0454	HOSE, 1/2 IN. LG, 9 FT REQUIRED		FT		*	*	*	*	49	
HOOZZ		HOSE: 34 IN. LG MMC60-66 (98042) MANUFACTURE FROM:	A	EA	1					49	8
PCOZZ	4720-269-2615	HOSE, 3/8 IN. ID, 34 IN. REQUIRED 1503-6 (01276)		FT		*	*	*	*	49	
HOOZZ		HOSE: 23 IN. LG MMC60-53 (98042) MANUFACTURE FROM:	A	EA	1					49	9
PCOZZ	4720-269-2615	HOSE, 26 IN. REQUIRED 1503-6 (01276)		FT		*	*	*	*	49	
HOOZZ		HOSE: 31 IN. LG MMC60-54 (98042) MANUFACTURE FROM:	A	EA	1					49	10
PCOZZ	4720-269-2615	HOSE, 31 IN. REQUIRED 1503-6 (01276)		FT		*	*	*	*	49	
HOOZZ		HOSE, RUBBER: STARTER TO RETURN TEE MMC60-67 (98042) MANUFACTURE FROM:	A	EA	1					49	11
PCOZZ	4720-541-8859	HOSE, 3/4 IN. ID, 9 FT REQUIRED 2956-12 (00624)		FT		*	*	*	*	49	
HOOZZ		HOSE: 4 IN. LG MMC60-57 (98042) MANUFACTURE FROM:	A	EA	1					49	12
PCOZZ	4720-269-2615	HOSE, 3/8 IN. ID, 4 IN. REQUIRED		FT		*	*	*	*	49	

(1) SMR CODE	(2) FEDERAL STOCK NUMBER	(3) DESCRIPTION REF NUMBER & MFR CODE	USABLE ON CODE	(4) UNIT OF MEAS	(5) QTY INC IN UNIT	(6) 15-DAY ORGANIZATIONAL MAINTENANCE ALW (a) 1-5	(b) 6-20	(c) 21-30	(d) 51-100	(7) ILLUSTRATION (a) FIG. NO.	(b) ITEM NO.
MOOZZ		HOSE; 43 IN. LG MMC60-61 (98042) MANUFACTURE FROM:	A	EA	1					49	13
PCOZZ	4720-541-8859	HOSE, 3 FT, 7 IN. REQUIRED 2556-12 (00624)		FT		*	*	*	*	49	
MOOZZ		HOSE; 17 IN. LG MMC60-65 (98042) MANUFACTURE FROM:	A	EA	1					49	14
PCOZZ	4720-541-8859	HOSE, 17 IN. REQUIRED 2556-12 (00624)		FT		*	*	*	*	49	
MOOZZ		HOSE; 162 IN. LG MMC60-64 (98042) MANUFACTURE FROM:	A	EA	1					49	15
PCOZZ	4720-067-0454	HOSE, 1/2 IN. ID, 13 FT, 6 IN. REQUIRED 1503-8 (01276)		FT		*	*	*	*	49	
MOOZZ		HOSE; 21 IN. LG MMC60-60 (98042) MANUFACTURE FROM:	A	EA	1					49	16
PCOZZ	4720-067-0454	HOSE, 1/2 IN. ID, 21 IN. REQUIRED 1503-8 (01276)		FT		*	*	*	*	49	
MOOZZ		HOSE; 9 IN. LG MMC60-59 (98042) MANUFACTURE FROM:	A	EA	1					49	17
PCOZZ	4720-067-0454	HOSE, 1/2 IN. ID, 9 IN. REQUIRED 1503-8 (01276)		FT		*	*	*	*	49	
XDOZZ		PLUG, PIPE; HAND PUMP 2082-4S (01276)	A	EA	1					49	18
PAOZZ	4820-227-0169	VALVE; GLOBE, 3/8 IN. PIPE SIZE, 125 LB, SCREWED 1 (14959)	A	EA	2	*	*	*	*	49	19
PAOZZ	4820-241-4431	VALVE, CHECK; INLET 3C12-3-3 (96259)	A	EA	2	*	*	*	*	49	20
PAOZZ	4820-322-8566	VALVE, HAND; ACCUMULATOR 1900FFG3-8IN (38508)	A	EA	2	*	*	*	*	49	21
PAOZZ	4820-075-1862	VALVE, NEEDLE; HAND PUMP 1900FFG1-4IN (38508)	A	EA	1	*	*	*	*	49	22
XDOZZ		REDUCER, BUSHING 2021-6-6S (01276)	A	EA	2					49	23
XDOZZ		REDUCER, PIPE 2021-6-8S (01276)	A	EA	2					49	24
XDOZZ		ELBOW, PIPE; 90 DEG 2024-6-6S (01276)	A	EA	7					49	25
XDOZZ		ELBOW, PIPE; 90 DEG 2024-6-8S (01276)	A	EA	2					49	26
XDOZZ		CROSS, PIPE 2060-6-6S (01276)	A	EA	2					49	27
XDOZZ		ELBOW, PIPE; 90 DEG 2025-6-8S (01276)	A	EA	2					49	28
XDOZZ		TEE, PIPE 2030-6-8S (01276)	A	EA	1					49	29
XDOZZ		BUSHING, PIPE 2081-12-6S (01276)	A	EA	4					49	30
XDOZZ		NIPPLE, PIPE; HAND PUMP 2083-6-4S (01276)	A	EA	1					49	31
XDOZZ		NIPPLE, PIPE 2083-6-6S (01276)	A	EA	15					49	32

(1) SMR CODE	(2) FEDERAL STOCK NUMBER	(3) DESCRIPTION REF NUMBER & MFR CODE	USABLE ON CODE	(4) UNIT OF MEAS	(5) QTY INC IN UNIT	(6) 15-DAY ORGANIZATIONAL MAINTENANCE ALW (a) 1-5	(b) 6-20	(c) 21-50	(d) 51-100	(7) ILLUSTRATION (a) FIG. NO.	(b) ITEM NO.
XDOZZ		NIPPLE, HEXAGON; HYDRAULIC PUMP 2083-2-2S (01276)	A	EA	2					49	33
XDOZZ		ELBOW, PIPE 2089-6-6S (01276)	A	EA	3					49	34
XDOZZ		TEE, PIPE 2090-6-6S (01276)	A	EA	7					49	35
XDOZZ		TEE, PIPE 2092-6-6S (01276)	A	EA	3					49	36
XDOZZ		CONNECTOR, HOSE 4721-6S (01276)	A	EA	10					49	37
XDOZZ		CONNECTOR, HOSE 4722-6S (01276)	A	EA	10					49	38
XDOZZ		CONNECTOR, HOSE; SWIVEL ENDS 4741-12B (01276)	A	EA	1					49	39
XDOZZ		CONNECTOR, HOSE 4812-6-8S (01276)		EA	7					49	40
XDOZZ		CONNECTOR, HOSE 4811-6S (01276)	A	EA	2					49	41
XDOZZ		CONNECTOR, HOSE; SWIVEL, 3/4 IN. 4741-12B (01276)	A	EA	2					49	42
XDOZZ		CONNECTOR, HOSE 4812-4-6S (01276)	A	EA	2					49	43
XDOZZ		NUT, TUBE 221000-6S (01276)	A	EA	2					49	44
XDOZZ		BUSHING, PIPE 2081-6-4S (01276)	A	EA	2					49	45
XDOZZ		TEE, PIPE 2090-6-6S (01276)	A	EA	2					49	46
XDOZZ		PLUG, PIPE HEXAGON 2082-6S (01276)	A	EA	1					49	47
XDOZZ		BUSHING, PIPE 2081-6-2S (01276)	A	EA	2					49	48
XDOZZ		ELBOW, PIPE 2024-4-6S (01276)	A	EA	5					49	49
XDOZZ		BUSHING, PIPE; STARTING MOTOR 2081-8-6S (01276)	A	EA	2					49	50
XDOZZ		REDUCER, TUBE 6-5TRBTXS (08752)	A	EA	1					49	51
XDOZZ		ADAPTER, STRAIGHT 6-6FBTXS (08752)	A	EA	1					49	52
XDOZZ		ELBOW, TUBE 4EBTXS (08752)	A	EA	1					49	53
XDOZZ		ADAPTER, STRAIGHT; PIPE TO TUBE 4-4GBTXS (08752)	A	EA	1					49	54
XDOZZ		NIPPLE, PIPE 2083-6-4S (01276)	A	EA	2					49	55
XDOZZ		CONNECTOR, PIPE 245J04 (30327)	A	EA	2					49	56
XDOZZ		ADAPTER, STRAIGHT; MOTOR OUTLET 2021-8-12S (01276)	A	EA	1					49	57
PAOZZ	6685-045-3211	GAGE, PRESSURE; ACCUMULATOR GG200656 (96906)	BC	EA	2	*	*	*	*	50	1

(1) SMR CODE	(2) FEDERAL STOCK NUMBER	(3) DESCRIPTION REF NUMBER & MFR CODE	USABLE ON CODE	(4) UNIT OF MEAS	(5) QTY INC IN UNIT	(6) 15-DAY ORGANIZATIONAL MAINTENANCE ALW (a) 1-5	(b) 6-20	(c) 21-50	(d) 51-100	(7) ILLUSTRATION (a) FIG. NO.	(b) ITEM NO.
MOOZZ		HOSE, RUBBER: PUMP OUTLET, 3/16 IN. ID 77-8-206 (26571) MANUFACTURE FROM:	B	EA	1					50	2
PCOZZ	4720-639-9907	HOSE, 3/16 IN. ID, AS REQUIRED MIL-H-79 SIZE 4 (81349)		FT		*	*	*	*	50	
MOOZZ		HOSE, RUBBER: 3/8 IN. ID 77-10-206 (26571) MANUFACTURE FROM:	B	EA	1					50	3
PCOZZ	4730-289-2615	HOSE, 3/8 IN. ID, AS REQUIRED		FT		*	*	*	*	50	
MOOZZ		HOSE, RUBBER: 3/8 IN. ID MANUFACTURE FROM:	B	EA	1					50	4
PCOZZ	4730-289-2615	HOSE, 3/8 IN. ID, AS REQUIRED		FT		*	*	*	*	50	
MOOZZ		HOSE: HAND PUMP, INLET, 3/8 IN. ID 77AH4-206 (26571) MANUFACTURE FROM:	B	EA	1					50	5
PCOZZ	4730-289-2615	HOSE, 3/8 IN. ID, AS REQUIRED		FT		*	*	*	*	50	
MOOZZ		HOSE: STARTER, INLET, 3/8 IN. ID 77845-206 (26571) MANUFACTURE FROM:	B	EA	1					50	6
PCOZZ	4720-289-2615	HOSE, 3/8 IN. ID, AS REQUIRED		FT		*	*	*	*	50	
XDOZZ		FITTING, HOSE: SWIVEL 320-6-6 (03925)	B	EA	2					50	7
XDOZZ		FITTING, HOSE: PUMP BY-PASS LINE 323-4 (03925)	B	EA	2					50	8
XDOZZ		CROSS, TUBE, FITTING: PUMP TO FILTER LINE A4200-6 (98660)	B	EA	1					50	9
XDOZZ		ADAPTER, STRAIGHT PIPE TO TUBE: FILTER A1000-6-6 (98660)	B	EA	1					50	10
XDOZZ		TEE, PIPE: FILTER A3000-6-6-6 (98660)	B	EA	1					50	11
XDOZZ		BUSHING, PIPE: STARTER CONTROL VALVE PF101-12-6 (98660)	B	EA	2					50	12
XDOZZ		ELBOW, PIPE: 90 DEG, STARTER CONTROL VALVE A2000-6-6 (98660)	B	EA	2					50	13
XDOZZ		ADAPTER, STRAIGHT: MOTOR OUTLET 2021-8-12S (01276)	B	EA	2					50	14
XDOZZ		ELBOW, PIPE TO TUBE: STARTER INLET A2000C6-8 (98660)	B	EA	2					50	15
XDOZZ		COUPLING, TUBE: TANK RETURN LINE A1000-8-8 (98660)	B	EA	1					50	16
XDOZZ		TEE, PIPE: RELIEF VALVE TO TANK PF3011-8 (98660)	B	EA	1					50	17
XDOZZ		NIPPLE, LONG: TANK INLET, 3 IN. PF10L8-3INLG (98660)	B	EA	1					50	18
XDOZZ		UNION, GROUND JOINT: TANK TO TEE 3477 (63686)	B	EA	1					50	19
XDOZZ		REDUCER, PIPE: RELIEF VALVE INLET PF10-8-6 (98660)	B	EA	1					50	20
XDOZZ		CONNECTOR, HOSE: STARTER OUTLET 474-12B (01276)	B	EA	2					50	21
XDOZZ		TEE, TUBE: FILTER RELIEF VALVE, 3/8 IN. 3200-6 (98660)	B	EA	1					50	22

(1) SMR CODE	(2) FEDERAL STOCK NUMBER	(3) DESCRIPTION REF NUMBER & MFR CODE	USABLE ON CODE	(4) UNIT OF MEAS	(5) QTY INC IN UNIT	(6) 15-DAY ORGANIZATIONAL MAINTENANCE ALW (a) 1-5	(b) 6-20	(c) 21-50	(d) 51-100	(7) ILLUSTRATION (a) FIG. NO.	(b) ITEM NO.
XDOZZ		ADAPTER, TUBE; ACCUMULATOR VALVE A1000-6-6 (98660)		EA	1					50	23
XDOZZ		NIPPLE, LONG; ACCUMULATOR INLET PF10L6-3INLG (98660)	B	EA	1					50	24
XDOZZ		TEE, PIPE; ACCUMULATOR INLET PF31-6 (98660)	B	EA	1					50	25
XDOZZ		NIPPLE, LONG; ACCUMULATOR PRESSURE VALVE PF10L6-3 (98660)	B	EA	1					50	26
XDOZZ		ELBOW; 90 DEG, GAGE CONNECTION PF21-6-1/4 (98660)	B	EA	1					50	27
XDOZZ		ELBOW; 45 DEG, PRESSURE HOSE FROM HAND PUMP A4500C6-6 (98660)	B	EA	1					50	28
XDOZZ		ELBOW; 90 DEG, HAND PUMP INLET A2000-6-6 (98660)	B	EA	1					50	29
XDOZZ		TEE, PIPE; ACCUMULATOR VALVE PF3010-6 (98660)	B	EA	1					50	30
XDOZZ		ELBOW; 90 DEG, HAND PUMP INLET A2100C6-6 (98660)	B	EA	1					50	31
XDOZZ		NIPPLE, LONG; HAND PUMP INLET PF10L6-3INLG (98660)	B	EA	1					50	32
XDOZZ		ELBOW; 90 DEG, HAND PUMP INLET PF201-6 (98660)	B	EA	1					50	33
XDOZZ		FITTING, SWIVEL HOSE; HAND PUMP HOSE 320-6-6 (03925)	B	EA	1					50	34
XDOZZ		ELBOW; 90 DEG, PUMP INLET 1025-1/2-6 (03925)	B	EA	1					50	35
XDOZZ		FITTING, SWIVEL HOSE; HAND PUMP 320-6-6 (03925)	B	EA	2					50	36
XDOZZ		ELBOW; 90 DEG, HAND PUMP 2200-6 (98660)	B	EA	1					50	37
XDOZZ		TEE, PIPE; TANK LINE OUTLET 3200-6 (98660)	B	EA	1					50	38
XDOZZ		ELBOW; 90 DEG, REDUCER, TANK OUTLET PF201-8-6 (98660)	B	EA	1					50	39
XDOZZ		ADAPTER, TUBE TO MISSLE IMPACT PREDICTORS; TANK OUTLET A1000-6-6 (98660)	B	EA	1					50	40
XDOZZ		ELBOW; 90 DEG, BY-PASS LINE TO TANK PF201-1/2 (98660)	B	EA	1					50	41
XDOZZ		ELBOW; 90 DEG, BY-PASS LINE TO TANK A2100-1/2 (98660)	B	EA	1					50	42
XDOZZ		TEE, PIPE; BY-PASS LINE TO TANK PF3010-1/2 (98660)	B	EA	1					50	43
XDOZZ		ADAPTER; PIPE TO TUBE, BY-PASS LINE TO TANK A1100-1/2 (98660)	B	EA	1					50	44
XDOZZ		ELBOW; 90 DEG, BREATHER LINE A2200-1/4 (98660)	B	EA	1/4					50	45
PAOZZ	4820-241-1427	VALVE, RELIEF; RETURN VALVE 1503-3-1000 (82271)	B	EA	1	*	*	*	*	50	46
PAOZZ	4820-162-7807	VALVE, DIRECTIONAL CONTROL VCA300378 (99066)	B	EA	2	*	*	*	*	50	47

	(1) SMR CODE	(2) FEDERAL STOCK NUMBER	(3) DESCRIPTION REF NUMBER & MFR CODE	USABLE ON CODE	(4) UNIT OF MEAS	(5) QTY INC IN UNIT	(6) 15-DAY ORGANIZATIONAL MAINTENANCE ALW (a) 1-5	(b) 6-20	(c) 21-50	(d) 51-100	(7) ILLUSTRATION (a) FIG. NO.	(b) ITEM NO.
N	MOOZZ		TUBE: 1/2 IN. OD 201-4510950-12 (80064) MANUFACTURE FROM:	C	EA	2					51	1
N	PAOZZ	4710-978-7010	TUBE, SEAMLESS, 3 FT, 6 IN. REQUIRED FOR EACH TUBE QQT830SEAMLESS (81348)		FT		*	*	*	*	51	
N	XDOZZ		ELBOW, SWIVEL: 1/2 IN. C5506X8 (79470)	C	EA	2					51	2
N	XDOZZ		CONNECTOR, MALE: 1/2 IN. C5205X8X8 (79470)	C	EA	5					51	3
N	XDOZZ		ELBOW, UNION: 1/2 IN. C5505X8 (79470)	C	EA	5					51	4
N	MOOZZ		TUBE: 1/2 IN. OD 201-4510950-2 (80064) MANUFACTURE FROM:	C	EA	1					51	5
N	PAOZZ	4710-978-7010	TUBE, SEAMLESS, 30 IN. REQUIRED QQT830SEAMLESS (81348)		FT		*	*	*	*	51	
N	MOOZZ		HOSE ASSEMBLY 169100608608-72 (79470) MANUFACTURE FROM:	C	EA	2					51	6
N	PCOZZ	4720-930-4515	HOSE, 1/2 IN. ID, AS REQUIRED MILH13351TYPE2CLASSA (81349)		FT		*	*	*	*	51	
N	PAOZZ		FITTING, SWIVEL, 2 EA REQUIRED D608 (79470)		EA		*	*	*	*	51	
N	XDOZZ		ELBOW MALE: 90 DEG C5405X8 (79470)	C	EA	2					51	7
N	MOOZZ		TUBE: 1/2 IN. OD 201-4510950-7 (80064) MANUFACTURE FROM:	C	EA	1					51	8
N	PAOZZ	4710-978-7010	TUBE, SEAMLESS, 2 FT, 11 IN. REQUIRED QQT830SEAMLESS (81348)		FT		*	*	*	*	51	
N	XDOZZ		TEE, UNION: 1/2 IN. C5705X8 (79470)	C	EA	4					51	9
N	MOOZZ		TUBE: 1/2 IN. STEEL 201-4510950-24 (80064) MANUFACTURE FROM:	C	EA	1					51	10
N	PAOZZ	4710-978-7010	TUBE, SEAMLESS, 8 IN. REQUIRED QQT830SEAMLESS (81348)		FT		*	*	*	*	51	
N	XDOZZ		ELBOW, MALE: 90 DEG, 1/2 IN. C5405X8X8 (79470)	C	EA	3					51	11
	PAOZZ		VALVE, SHUTOFF 1900FFG (58447)	C	EA	2	*	*	*	*	51	12
N	MOOFF		TUBE: 1/2 IN. OD 201-4510950-3 (80064) MANUFACTURE FROM:	C	EA	1					51	13
N	PAOZZ	4710-978-7010	TUBE, SEAMLESS, 34 1/2 IN. REQUIRED QQT830SEAMLESS (81348)		FT		*	*	*	*	51	
N	MOOFF		HOSE ASSEMBLY 02508A608608-75 (79470) MANUFACTURE FROM:	C	EA	2					51	14
N	PCOZZ	4720-930-4515	HOSE, 1/2 IN. ID, AS REQUIRED MILH13351TYPE2CLASSA (81349)		FT		*	*	*	*	51	
N	PAOZZ	4730-319-5878	FITTING, SWIVEL, FEMALE, 4 EA REQUIRED 02508A608 (79470)		EA		*	*	*	*	51	
N	XDOZZ		CROSS: 1/2 IN. C5995X8 (79470)	C	EA	1					51	15

(1) SMR CODE	(2) FEDERAL STOCK NUMBER	(3) DESCRIPTION REF NUMBER & MFR CODE	USABLE ON CODE	(4) UNIT OF MEAS	(5) QTY INC IN UNIT	(6) 15-DAY ORGANIZATIONAL MAINTENANCE ALW (a) 1-5	(b) 6-20	(c) 21-50	(d) 51-100	(7) ILLUSTRATION (a) FIG. NO.	(b) ITEM NO.
N MOOZZ		TUBE: 1/2 IN. OD 201-4510950-8 (80064) MANUFACTURE FROM:	C	EA	1					51	16
N PAOZZ	4710-978-7010	TUBE, SEAMLESS, 5 FT, 4 IN. REQUIRED QQT830SEAMLESS (81349)		FT		•	•	•	•	51	
N MOOZZ		HOSE ASSEMBLY 02508A108668-44 (79470) MANUFACTURE FROM:	C	EA	1					51	17
N PCOZZ	4720-930-4515	HOSE, 1/2 IN. ID, AS REQUIRED MILH13351TYPE2CLASSA (81349)		FT		•	•	•	•	51	
N PAOZZ	4730-374-6960	FITTING, RIGID, 1 EA REQUIRED 02508A108 (79470)		EA		•	•	•	•	51	
N PAOZZ	4730-913-7406	FITTING, SWIVEL, 1 EA REQUIRED 02508A668 (79470)		EA		•	•	•	•	51	
N XDOZZ		TEE 2093-8-8S (01276)	C	EA	1					51	18
N XDOZZ		NIPPLE, LONG: 1/2-14 THD SIZE, 3 1/2 IN. LG 1-2INIPSX3AND1-2INLG (63686)	C	EA	6					51	19
N XDOZZ		BUSHING: ACCUMULATOR PRESSURE GAGE C3109X8X4 (79470)	C	EA	2					51	20
N XDOZZ		ELBOW: 90 DEG, 1/2 IN. C3509X8 (79470)	C	EA	2					51	21
N XDOZZ		TEE: 1/2 IN. C3709X8 (79470)	C	EA	2					51	22
N MOOFF		HOSE ASSEMBLY 02508A608608-30 (79470) MANUFACTURE FROM:	C	EA	2					51	23
N PCOZZ	4720-930-4515	HOSE, 1/2 IN. ID, AS REQUIRED MILH13351TYPE2CLASSA (81349)		FT		•	•	•	•	51	
N PAOZZ	4730-952-0038	FITTING, SWIVEL, FEMALE, 2 EA REQUIRED 02508A608 (79470)		EA		•	•	•	•	51	
N XDOZZ		TEE: 1/2 IN. C5605X8X8X8 (79470)	C	EA	2					51	24
XDOZZ		BUSHING, REDUCING C3109X12X8 (79470)	C	EA	3					51	25
N MOOZZ		HOSE ASSEMBLY 02508A608608-36 (79470) MANUFACTURE FROM:	C	EA	2					51	26
N PCOZZ	4720-930-4515	HOSE, 1/2 IN. ID, AS REQUIRED MILH13351TYPE2CLASSA (81349)		FT		•	•	•	•	51	
N PAOZZ		FITTING, SWIVEL, FEMALE, 2 EA REQUIRED 02508A860 (79470)		EA		•	•	•	•	51	
N XDOZZ		ELBOW, MALE: 90 DEG, 1/2 IN. C5405X8X12 (79470)	C	EA	2					51	27
N MOOZZ		TUBE: 1/2 IN. OD 201-4510950-9 (80064) MANUFACTURE FROM:	C	EA	1					51	28
N PAOZZ	4710-978-7010	TUBE, SEAMLESS, 2 FT, 9 IN. REQUIRED QQT830SEAMLESS (81348)		FT		•	•	•	•	51	
N XDOZZ		TEE, MALE RUN: 1/2 IN. C5735X8X8X8 (79470)	C	EA	2					51	29

(1) SMR CODE	(2) FEDERAL STOCK NUMBER	(3) DESCRIPTION — REF NUMBER & MFR CODE	USABLE ON CODE	(4) UNIT OF MEAS	(5) QTY INC IN UNIT	(6) 15-DAY ORGANIZATIONAL MAINTENANCE ALW (a) 1-5	(b) 6-20	(c) 21-50	(d) 51-100	(7) ILLUSTRATION (a) FIG. NO.	(b) ITEM NO.
NH00ZZ		TUBE: 1/2 IN. OD 201-4510950-5 (80064) MANUFACTURE FROM:	C	EA	1					51	30
NPA0ZZ	4710-978-7010	TUBE, SEAMLESS, 6 FT REQUIRED QQT830SEAMLESS (81348)		FT		*	*	*	*	51	
NH00ZZ		TUBE: 1/2 IN. OD 201-4510950-6 (80064) MANUFACTURE FROM:	C	EA	1					51	31
NPA0ZZ	4710-978-7010	TUBE, SEAMLESS, 2 FT, 3 IN. REQUIRED QQT830SEAMLESS (81348)		FT		*	*	*	*	51	
PC0ZZ	4720-879-0776	HOSE ASSEMBLY: FEMALE SWIVEL, BOTH ENDS 5104104616-616-28 (79470)		EA	2	*	*	*	*	51	32
XD0ZZ		CONNECTOR: MALE 712262 (18877)	C	EA	2					51	35
XD0ZZ		NIPPLE, LONG TUBE 3-4INIPSX21NLG (63686)	C	EA	3					51	43
NXD0ZZ		TEE: 3/4 IN. 5706 (79470)	C	EA	1					51	44
XD0ZZ		BUSHING, REDUCING C3109X12X8 (79470)	C	EA	3					51	45
NXD0ZZ		NIPPLE, LONG: 1/2 IN. 1-2INIPSX21NLG (63686)	C	EA	1					51	46
XD0ZZ		NIPPLE, LONG, TUBE 3-4INIPSX41NLG (63686)	C	EA	1					51	47
NH00ZZ		HOSE ASSEMBLY 1691OD608608-75 (79470) MANUFACTURE FROM:	C	EA	2					51	48
NPC0ZZ	4720-930-4515	HOSE, 1/2 IN. ID, AS REQUIRED MILH13351TYPE2CLASSA (81349)		FT		*	*	*	*	51	
NPA0ZZ		FITTING, SWIVEL, 2 EA REQUIRED D608 (79470)		EA		*	*	*	*	51	
XD0ZZ		CONNECTOR, MALE; HOSE TO PUMP C520508 (79470)	C	EA	2					51	49
NH00ZZ		TUBE: 1/2 IN. OD 201-4510950-10 (80064) MANUFACTURE FROM:	C	EA	1					51	50
NPA0ZZ	4710-978-7010	TUBE, SEAMLESS, 2 FT, 4 1/2 IN. REQUIRED QQT830 (81348)		FT		*	*	*	*	51	
NH00ZZ		TUBE: 1/2 IN. OD 201-4510950-1 (80064) MANUFACTURE FROM:	C	EA	1					51	51
NPA0ZZ	4710-978-7010	TUBE, SEAMLESS, 6 IN. REQUIRED QQT830SEAMLESS (81348)		FT		*	*	*	*	51	
PA0ZZ	4820-845-0274	VALVE, GLOBE, SHUTOFF: 1/2 IN. 1 (14959)	C	EA	1	*	*	*	*	51	52
NXD0ZZ		ELBOW, MALE PIPE SF109A-8-8 (03925)	C	EA	1					51	53
NH00ZZ		TUBE: 1/2 IN. OD 201-4510950-11 (80064) MANUFACTURE FROM:	C	EA	1					51	54
NPA0ZZ	4710-978-7010	TUBE, SEAMLESS, 3 1/2 IN. REQUIRED QQT830SEAMLESS (81348)		FT		*	*	*	*	51	

	(1) SMR CODE	(2) FEDERAL STOCK NUMBER	(3) DESCRIPTION REF NUMBER & MFR CODE	USABLE ON CODE	(4) UNIT OF MEAS	(5) QTY INC IN UNIT	(6) 15-DAY ORGANIZATIONAL MAINTENANCE ALW (a) 1-5	(b) 6-20	(c) 21-50	(d) 51-100	(7) ILLUSTRATION (a) FIG. NO.	(b) ITEM NO.
N	MOOZZ		HOSE ASSEMBLY 16910D608608-44 (79470) MANUFACTURE FROM:	C	EA	1					51	55
N	PCOZZ	4720-930-4515	HOSE, 1/2 IN. ID, AS REQUIRED MILH13351TYPE2CLASSA (81349)		FT		*	*	*	*	51	
N	PAOZZ		FITTING, SWIVEL, 2 EA REQUIRED D608 (79470)		EA		*	*	*	*	51	
	MOOZZ		HOSE ASSEMBLY 16910D608608-44 (79470) MANUFACTURE FROM:	C	EA	1					51	56
	PCOZZ	4720-930-4515	HOSE, 1/2 IN. ID, AS REQUIRED MILH13351TYPE2CLASSA (81349)		FT		*	*	*	*	51	
	PAOZZ		FITTING, SWIVEL, 2 EA REQUIRED D608 (79470)		EA		*	*	*	*	51	
N	XDOZZ		ELBOW, MALE; 90 DEG, 1/2 IN. C5405X8X8 (79470)	C	EA	2					51	57
N	MOOZZ		TUBE; 1/2 IN. OD 201-4510950-4 (80064) MANUFACTURE FROM:	C	EA	1					51	58
N	PAOZZ	4710-978-7010	TUBE, SEAMLESS, 4 FT, 6 IN. REQUIRED QQT830SEAMLESS (81348)		FT		*	*	*	*	51	
	XDOZZ		TEE, FEMALE TO MALE 2029-12-12S (01276)	A	EA	1						
	PCOZZ	4720-289-2615	HOSE, RUBBER; 3/8 IN. ID 1509-6 (00624)	A	FT		*	*	*	*		
	PCOZZ	4720-067-0454	HOSE, RUBBER; 13/32 IN. ID 1503-8 (01276)	A	FT		*	*	*	*		
	PCOZZ	4720-541-8859	HOSE, RUBBER; 3/4 IN. ID 2556-12 (00624)	A	FT	19	*	*	*	*		
	PCOZZ	4720-420-7723	HOSE, RUBBER; 5/16 IN. ID 1503-6 (01276)	A	FT	3	*	*	*	*		
N	XDOZZ		NUT; 1/2 IN. C5115X8 (79470)	C	EA	29						
N	XDOZZ		NUT; 3/4 IN. AL818-12 (88044)	C	EA	10						
N	XDOZZ		SLEEVE C5165X12 (79470)	C	EA	10						
N	XDOZZ		ELBOW, UNION; 3/4 IN. C5505X12 (79470)	C	EA	6						
N	XDOZZ		ADAPTER; 1/2 X 3/8 IN. C3209X8X6 (79470)	C	EA	2						
N	XDOZZ		REDUCER; 1/2 X 1/4 IN. C5015X8X4 (79470)	C	EA	1						
N	XDOZZ		NUT; 1/2 IN. C5105X8 (79470)	C	EA	1						
N	XDOZZ		NIPPLE, HEXAGON; 1/2 IN. C3069X8 (79470)	C	EA	1						
N	XDOZZ		ELBOW; 90 DEG, 3/4 IN. 57013-4IN (83486)	C	EA	1						
N	PAOZZ	5306-637-8957	BOLT, MACHINE; SQUARE HEAD, 3/8-16 THD SIZE, 1 1/2 IN. LG MS35355-66 (96906)	C	EA	4	*	*	*	*		
N	PAOZZ	5310-761-0654	NUT, HEXAGON; 3/8-16 THD SIZE MS51967-9 (96906)	C	EA	4	*	*	*	*		

(1) SMR CODE	(2) FEDERAL STOCK NUMBER	(3) DESCRIPTION REF NUMBER & MFR CODE	USABLE ON CODE	(4) UNIT OF MEAS	(5) QTY INC IN UNIT	(6) 15-DAY ORGANIZATIONAL MAINTENANCE ALW (a) 1-5	(b) 6-20	(c) 21-50	(d) 51-100	(7) ILLUSTRATION (a) FIG. NO.	(b) ITEM NO.
PAOZZ	5310-209-1962	WASHER, FLAT: 3/8 IN. SCREW SIZE 61-0542-1 (42280)	C	EA	4	•	•	•	•		
PAOZZ	5306-018-6742	BOLT, MACHINE 186742 (24617)	C	EA	12	•	•	•	•		
PAOZZ	5310-934-9764	NUT, PLAIN, HEXAGON: 10-24 THD SIZE MS35649-205 (96906)	C	EA	12	•	•	•	•		
PAOZZ	5310-809-8944	WASHER, FLAT MS27183-7 (96906)	C	EA	12	•	•	•	•		
PAOZZ	5340-451-8861	CLAMP, TUBE MS21104 (96906)	C	EA	16	•	•	•	•		
PAOZZ	4730-352-9414	PLUG: 1/2 IN. NPTF PS7628 (01843)	C	EA	1	•	•	•	•		
XDOZZ		CONNECTOR: MALE 7974112 (00000)	C	EA	2						
XDOZZ		ELBOW: 90 DEG C540548 (79470)	C	EA	1						
XDOZZ		ELBOW: 90 DEG, 1/2 IN. 13205E4369-4 (97403)	C	EA	2						
		GROUP 36 - STARTING ENGINE, HYDRAULIC									
PAOZZ		SCREW, CAP, HEXAGON HEAD: STARTER MTG, 5/8-11 THD SIZE, 1 3/8 IN. LG 271557 (72582)		EA	4	•	•	•	•	52	1
PAOZZ	5310-880-6653	WASHER, LOCK: STARTER MTG, 5/8 IN. SCREW SIZE MS35338-50 (96906)		EA	3	•	•	•	•	52	2
PAOFF	2990-115-0137	STARTER, ENGINE: HYDRAULIC RD ENGINE CMD2A221 (01843) (INCLUDES SAME COMPONENTS AS STARTER, FSN 2990-844-2379, EXCEPT WHERE ANNOTATED)		EA	1	•	•	•	•	52	
PAOFF	2990-844-2379	STARTER, ENGINE: HYDRAULIC FOR LB ENGINE CMD2A111 (01843)		EA	1	•	•	•	•	52	
PAOFF	2920-115-0134	MOTOR ASSEMBLY: HYDRAULIC COUNTERCLOCKWISE HM202656-2 (01843) (USED ON STARTER, FSN 2990-115-0137, ONLY)		EA	1	•	•	•	•	52	3
PAOFF	2920-115-0133	MOTOR ASSEMBLY: HYDRAULIC HM202656-1 (01843) (USED ON STARTER, FSN 2990-844-2379, ONLY)		EA	1	•	•	•	•	52	3
		GROUP 37 - SOLENOID VALVE, STARTING MOTOR									
PAOFF	4810-757-7197	VALVE, SOLENOID: CRANK MOTOR 31446-24 (82271)	A	EA	2	•	•	•	•		
PAOFF	4820-833-3073	VALVE CONTROL, HYDRAULIC STARTER VCA300403-1 (01843)	C	EA	2	•	•	•	•	54	1
XDOZZ		TUBE TU202909 (01843)	C	EA	1					54	2
XDOZZ		FITTING, CONNECTOR F11340 (01843)	C	EA	1					54	3
XDOZZ		FITTING, ELBOW F11338 (01843)	C	EA	1					54	4

	(1) SMR CODE	(2) FEDERAL STOCK NUMBER	(3) DESCRIPTION REF NUMBER & MFR CODE	USABLE ON CODE	(4) UNIT OF MEAS	(5) QTY INC IN UNIT	(6) 15-DAY ORGANIZATIONAL MAINTENANCE ALW (a) 1-5	(b) 6-20	(c) 21-50	(d) 51-100	(7) ILLUSTRATION (a) FIG. NO.	(b) ITEM NO.
N	PAOZZ		VALVE, PLUG, SHUTOFF VA202908 (01843)	C	EA	1	•	•	•	•	54	5
N	XDOZZ		FITTING, HEXAGON, NIPPLE F11339 (01843)	C	EA	1					54	6
N	XDOZZ		FITTING, STREET, ELBOW F11341 (01843)	C	EA	1					54	7
N	PAOZZ		SCREW, CAP, HEXAGON HEAD: VALVE SOLENOID MTG SC1627 (01843)	C	EA	4	•	•	•	•	54	8
N	PAOZZ	5310-499-6148	WASHER, LOCK: VALVE SOLENOID MTG WA5-8CA (01843)	C	EA	4	•	•	•	•	54	9
N	PAOZZ	5945-450-5161	VALVE, SOLENOID VA202906 (01843)	C	EA	1	•	•	•	•	54	11
			GROUP 38 - PUMP HYDRAULIC STARTER									
C	PAOZZ	5305-044-4153	SCREW, CAP, HEXAGON HEAD: PUMP MTG 10C158 (72582)	AB	EA	8	•	•	•	•	55	1
C	PAOZZ	5310-584-5272	WASHER, LOCK: PUMP MTG MS35338-48 (96906)	AB	EA	8	•	•	•	•	55	2
C	PAOZZ		SCREW, CAP, HEXAGON HEAD: PUMP MTG 179057 (72582)	AB	EA	2	•	•	•	•	55	3
C	PAOZZ	5310-595-6852	WASHER, COVER: COPPER 5150568 (72582)	AB	EA	2	•	•	•	•	55	4
C	PCOZZ	5330-620-7359	GASKET: PUMP MTG 5117061 (72582)		EA	2	•	•	•	•	55	5
C	PAOZZ	5305-071-1767	SCREW, CAP, HEXAGON HEAD: PUMP DRIVE, PLATE MTG, 1/2-13 THD SIZE, 1 1/8 IN. LG MS90725-110 (96906)	AB	EA	8	•	•	•	•	55	6
C	PAOZZ	5310-584-5272	WASHER, LOCK: PUMP DRIVE, PLATE MTG, 1/2 IN, SCREW SIZE MS35338-48 (96906)	AB	EA	8	•	•	•	•	55	7
C	XDOZZ		PLATE, PUMP DRIVE 6525073 (72582)	AB	EA	2					55	8
C	PAOFF	2990-629-9713	PUMP, HYDRAULIC: STARTER 5125466 (72582)	AB	EA	2	•	•	•	•	55	
C	PAOZZ	5310-732-0559	NUT, PLAIN, HEXAGON: SHAFT MS51968-8 (96906)	AB	EA	2	•	•	•	•	55	9
C	PAOZZ	5310-637-9541	WASHER, LOCK: SHAFT 110730 (72582)	AB	EA	2	•	•	•	•	55	10
C	XDOZZ		DRIVE, PUMP 6525066 (72582)	AB	EA	2					55	11
C	PAOZZ	5306-021-2544	SCREW, CAP, HEXAGON HEAD: PLATE TO BODY 181333 (72582)	AB	EA	6	•	•	•	•	55	12
C	PAOZZ	5310-582-5965	WASHER, LOCK: PLATE TO BODY MS35338-44 (96906)	AB	EA	6	•	•	•	•	55	13
C	XDOZZ		PLATE, MOUNTING 5125178 (72582)	AB	EA	2					55	14
C	PCOZZ	2990-658-8831	GASKET: PUMP BODY 6525065 (72582)	AB	EA	2	•	•	•	•	55	15
	XDOZZ		ELBOW, RETURN: PUMP TO RESERVOIR 118753 (72582)	AB	EA	2					55	28
C	XDOZZ		ELBOW, INLET: PUMP MS20822-6 (96906)	AB	EA	2					55	29

(1) SMR CODE	(2) FEDERAL STOCK NUMBER	(3) DESCRIPTION REF NUMBER & MFR CODE	USABLE ON CODE	(4) UNIT OF MEAS	(5) QTY INC IN UNIT	(6) 15-DAY ORGANIZATIONAL MAINTENANCE ALW (a) 1-5	(b) 6-20	(c) 21-50	(d) 51-100	(7) ILLUSTRATION (a) FIG. NO.	(b) ITEM NO.
C XDOZZ		SPACER, PUMP 9A11504 (72582)	AB	EA	2					55	30
C XDOZZ		ELBOW, OUTLET: PUMP 118735 (72582)	AB	EA	2					55	35
M PAOFF	4320-864-6936	PUMP RECHARGING MPA300412 (01843)	C	EA	2	•	•	•	•	56	
M PAOFF	4320-350-8725	PUMP ASSEMBLY, ENGINE MPA308090A (01843)	C	EA	1	•	•	•	•	56	
M XDOZZ		FLANGE MOUNTING ASSEMBLY FL202603 (01843) (INCLUDES ITEMS 3 AND 8 ON FIG 56)	C	EA	1					56	4
M PAOZZ	5310-004-5138	NUT, PLAIN, HEXAGON: FLANGE MTG MS5-10CA (01843)	C	EA	4	•	•	•	•	56	46
M PAOZZ	5305-004-1590	SCREW, CAP, HEXAGON HEAD: FLANGE MOUNTING SC2046 (01843)	C	EA	4	•	•	•	•	56	47
M PAOZZ	5310-782-4412	WASHER, LOCK: FLANGE MTG WA6-10CA (01843)	C	EA	8	•	•	•	•	56	48
M PCOZZ	5330-401-0864	GASKET: FLANGE GA202082 (01843)	C	EA	1	•	•	•	•	56	50
M XDOZZ		FLANGE FL202694 (01843)	C	EA	1					56	51
M XDOZZ		FLANGE ASSEMBLY FL202693 (01843)	C	EA	1					56	52
M PAOZZ	5330-850-5705	SEAL, OIL SE1047 (01843)	C	EA	1	•	•	•	•	56	53
		GROUP 40 - PUMP, HAND, HYDRAULIC STARTING									
PAOFF	4320-684-7192	PUMP, HAND: HYDRAULIC STARTING MPA300118 (01843)		EA	1	•	•	•	•		
PAOZZ	5305-225-8906	BOLT, HEXAGON HEAD: HAND PUMP MTG MS90725-42 (96906)	C	EA	4	•	•	•	•		
PAOZZ	5310-880-7744	NUT, HEXAGON: HAND PUMP MTG MS51967-5 (96906)	C	EA	4	•	•	•	•		
		GROUP 41 - FILTER, OIL, HYDRAULIC STARTING									
C PAOZZ	2815-906-1591	FILTER, HIGH PRESSURE: STARTING FHP300116 (01843)	AB	EA	2	•	•	•	•	59	
C XAOZZ		CAP, FILTER: OUTLET CP200576 (01843)	AB	EA	2					59	1
C PCOZZ	2940-897-2641	PACKING, PREFORMED: OUTLET CAP GASKET GA100201 (01843)	AB	EA	2	•	•	•	•	59	2
C PAOZZ	2940-810-5686	FILTER, SCREEN ELEMENT FE200575 (01843)	AB	EA	2	•	•	•	•	59	3
C XDOZZ		SEAT, SPRING, FILTER ELEMENT GU200574 (01843)	AB	EA	2					59	4
C XDOZZ		SPRING, HELICAL, FILTER SEAT SP202109 (01843)	AB	EA	2					59	5
C XAOZZ		BODY, FILTER: HYDRAULIC, OIL HB200570 (01843)	AB	EA	2					59	6
D PAOZZ	2990-005-7652	FILTER, Y, HYDRAULIC FLUID FHK300988-3A (01843)	C	EA	1	•	•	•	•	60	

(1) SMR CODE	(2) FEDERAL STOCK NUMBER	(3) DESCRIPTION REF NUMBER & MFR CODE	USABLE ON CODE	(4) UNIT OF MEAS	(5) QTY INC IN UNIT	(6) 15-DAY ORGANIZATIONAL MAINTENANCE ALW (a) 1-5	(b) 6-20	(c) 21-50	(d) 51-100	(7) ILLUSTRATION (a) FIG. NO.	(b) ITEM NO.
D XAOZZ		CAP END FILTER CP208799 (01843)	C	EA	1					60	1
D PCOZZ	2940-897-2641	SEAL FILTER ELEMENT GA100201 (01843)	C	EA	1	•	•	•	•	60	2
D PAOZZ	2940-810-5686	ELEMENT FILTER; 40 MICRONS FE200575 (01843)	C	EA	1	•	•	•	•	60	3
D XAOZZ		BODY, FILTER HG202803-3A (01843)	C	EA	1					60	4
		GROUP 42 - TRANSFER GEAR ASSEMBLY									
PAOZZ	2815-572-2103	CAP, BREATHER AND FILLER 1528732 (72582)		EA	2	•	•	•	•	61	38
PAOZZ	2815-310-9636	BREATHER AND BAFFLE; FILLER 5173471 (72582)		EA	2	•	•	•	•	61	39
		GROUP 43 - GEAR ASSEMBLY, REVERSE									
PAOZZ	2910-588-8439	TUBE ASSEMBLY; REVERSE GEAR 5171197 (72582)		EA	2	•	•	•	•		
PAOZZ	4710-457-8626	TUBE; D ENGINE TRANSFER GEAR 5119768 (72582)		EA	1	•	•	•	•		
PAOZZ	4710-457-8628	TUBE; B ENGINE TRANSFER GEAR 5119769 (72582)		EA	1	•	•	•	•		
PAOZZ	5306-226-4826	BOLT, MACHINE; 5/16-18 X 7/8 IN. LG MS90728-33 (96906)		EA	8	•	•	•	•		
PAOZZ	5310-407-9566	WASHER, LOCK; 5/16 IN. SCREW SIZE MS35338-45 (96906)		EA	6	•	•	•	•		
PCOZZ	5330-641-8907	GASKET; OIL DRAIN TUBE 5171244 (72582)		EA	4	•	•	•	•		
PCOZZ	4720-278-5049	HOSE, PREFORMED; OIL DRAIN TUBE 5171249 (72582)		EA	2	•	•	•	•		
XDOZZ		CLAMP; OIL DRAIN HOSE, 1 5/8 IN. MS35842-12 (96906)		EA	4						
		GROUP 44 - FLYWHEEL HOUSING									
XDOZZ		GAGE, LIQUID LEVEL; FLYWHEEL HOUSING 5109888 (72582)		EA	4					63	1
XDOZZ		CLAMP, LOOP; 1/2 IN. DIP STICK ADAPTER MS21333-59 (96906)		EA	4					63	2
XDOZZ		ADAPTER ASSEMBLY, OIL LEVEL GAGE 5109765 (72582)		EA	4					63	3
XDOZZ		ELBOW, INVERTER TUBE; 1/2 IN. 90 DEG DIP STICK ADAPTER 137425 (72582)		EA	4					63	4
PAOZZ	2815-572-2103	CAP, FLYWHEEL HOUSING BREATHER 1528732 (72582)		EA	4	•	•	•	•	63	5
XDOZZ		TUBE, FLYWHEEL HOUSING BREATHER 5191238 (72582)		EA	2					63	6
PAOZZ	5305-269-3210	SCREW, CAP, HEXAGON HEAD; FLYWHEEL HOUSING INSPECTION HOLE COVER, 3/8-16 THD SIZE, 7/8 IN. LG MS90725-59 (96906)		EA	16	•	•	•	•	63	13
PAOZZ	5310-637-9541	WASHER, LOCK; FLYWHEEL HOUSING INSPECTION HOLE COVER, 3/8 IN. SCREW SIZE MS35338-46 (96906)		EA	16	•	•	•	•	63	14

(1) SMR CODE	(2) FEDERAL STOCK NUMBER	(3) DESCRIPTION — REF NUMBER & MFR CODE	USABLE ON CODE	(4) UNIT OF MEAS	(5) QTY INC IN UNIT	(6) 15-DAY ORGANIZATIONAL MAINTENANCE ALW (a) 1-5	(b) 6-20	(c) 21-50	(d) 51-100	(7) ILLUSTRATION (a) FIG. NO.	(b) ITEM NO.
XBOZZ		COVER, FLYWHEEL HOUSING: INSPECTION HOLE 5170961 (72582)		EA	4					63	15
PCOZZ	2815-363-8334	GASKET: FLYWHEEL HOUSING INSPECTION HOLE COVER 5170695 (72582)		EA	4	•	•	•	•	63	16
PCOZZ		HOSE ASSEMBLY: FLEXIBLE OIL STRAINER 5144540 (72582)		EA	2	•	•	•	•		
PAOZZ	4730-389-6066	FLANGE, PIPE, OIL HOSE 5185772 (72582)		EA	2	•	•	•	•		
C XDOZZ		CONNECTOR TUBE: OIL STRAINER 7182621 (18877)		EA	4						
XDOZZ		ELBOW, STREET: OIL STRAINER TUBE 106687 (72582)		EA	2						
XDOZZ		ELBOW, STREET: OIL STRAINER TUBE 144116 (72582)		EA	2						
PAOZZ	5305-068-0511	SCREW, CAP, HEXAGON HEAD: OIL TUBE FLANGE, 3/8-16 THD SIZE, 1 1/4 IN. LG MS90728-62 (96906)		EA	4	•	•	•	•		
PAOZZ	5310-637-9581	WASHER, LOCK: OIL TUBE FLANGE, 3/8 IN. SCREW SIZE MS35338-46 (96906)		EA	4	•	•	•	•		
PCOZZ	4720-557-9635	TUBE ASSEMBLY: FLEXIBLE OIL GAGE 5144634 (72582)		EA	1	•	•	•	•		
PAOZZ	4730-987-3620	FITTING: RESTRICTED OIL GAGE 1508350 (72582)		EA	1	•	•	•	•		
XDOZZ		ELBOW, STREET: OIL GAGE 444052 (72582)		EA	1						
		GROUP 51 - OIL PAN									
PACZZ	4730-289-5176	PLUG, PIPE: OIL DRAIN MS49005-8 (96906)		EA	4	•	•	•	•	71	1
PAOZZ	4730-253-4413	ELBOW: OIL PAN DRAIN TUBE, 1/2-14 THD SIZE, 90 DEG, STREET MS39230-4 (96906)		EA	4	•	•	•	•	71	2
HDOZZ		HOSE: FLEXIBLE, OIL DRAIN 5122206 (72582) MANUFACTURE FROM:	AB	EA	1					71	3
PCOZZ		HOSE, AS REQUIRED 1528 (01276)		FT		•	•	•	•	71	
PCOZZ	4720-494-1750	HOSE, FLEXIBLE: OIL PAN DRAIN 5144531 (72582)	C	EA	1	•	•	•	•	71	3
PAOZZ	4730-253-4413	ELBOW: OIL PAN DRAIN TUBE, 3/8-18 THD SIZE, 90 DEG, STREET MS39230-3 (96906)		EA	4	•	•	•	•	71	4
PAOZZ	5306-018-9691	BOLT, MACHINE: OIL PAN MTG, 5/16-18 THD SIZE, 3/4 IN. LG 189691 (72582)		EA	68	•	•	•	•	71	9
PAOZZ	4730-542-2806	FITTING: OIL PAN DRAIN 4730-6-8B (01276)	AB	EA	4	•	•	•	•		
PAOZZ	4730-193-0871	BUSHING: OIL PAN DRAIN MP471 (81348)		EA	2	•	•	•	•		
PAOZZ	4730-202-7663	BUSHING: OIL PAN DRAIN MP471TYPE8 (81348)		EA	2	•	•	•	•		
PAOZZ	4730-273-6097	COUPLING: OIL PAN DRAIN MP581TY1 (81348)		EA	2	•	•	•	•		

(1) SMR CODE	(2) FEDERAL STOCK NUMBER	(3) DESCRIPTION REF NUMBER & MFR CODE	USABLE ON CODE	(4) UNIT OF MEAS	(5) QTY INC IN UNIT	(6) 15-DAY ORGANIZATIONAL MAINTENANCE ALW (a) 1-5	(b) 6-20	(c) 21-50	(d) 51-100	(7) ILLUSTRATION (a) FIG. NO.	(b) ITEM NO.
PACZZ	4730-011-2304	PLUG: OIL TUBE DRAIN WVP471 (81348)		EA	2	•	•	•	•		
PAOZZ	5340-282-7509	CLAMP, LOOP: OIL DRAIN TUBE MS21333-62 (96906)		EA	2	•	•	•	•		
XDOZZ		BRACKET: OIL DRAIN TUBE 5173022 (72582)		EA	2						
PAOZZ	5305-206-6776	SCREW, CAP, HEXAGON HEAD: BRACKET MTG FF3B5TY2STYLE1B[illegible] (81348)		EA	2	•	•	•	•		
PAOZZ	5310-732-0559	NUT, PLAIN, HEXAGON: BRACKET MTG MS51968-8 (96906)		EA	2	•	•	•	•		
PAOZZ	5310-637-9541	WASHER, LOCK: BRACKET MTG, 3/8 IN. SCREW SIZE MS35338-46 (96906)		EA	2	•	•	•	•		
		GROUP 55 - CYLINDER BLOCK									
XDOZZ		TUBE ASSEMBLY, METAL: AIR BOX DRAIN 5158825 (72582)		EA	8					75	19
XDOZZ		ELBOW, PIPE: AIR BOX, DRAIN, 1/8-27 THD SIZE 137422 (72582)		EA	8					75	20
		GROUP 56 - ENGINE PILOT HOUSE CONTROLS									
PAOZZ	5305-273-5630	SCREW, CAP, SOCKET HEAD: CONTROL ARM, 5/16-18 THD SIZE, 3/4 IN. LG MS35461-36 (96906)	B	EA	4	•	•	•	•	76	23
XBOZZ		ARM, CONTROL D18356 (41625)	B	EA	4					76	24
PAOZZ		SETSCREW: INDICATOR CUP MTG, SLOTTED HD, CUP POINT, 5/16-18 THD SIZE E19247-1 (41625)	B	EA	4	•	•	•	•	76	25
PAOZZ	5310-891-1751	NUT, PLAIN, HEXAGON: ARM MTG, 3/8-24 THD SIZE MS35691-32 (96906)	B	EA	6	•	•	•	•	78	1
PAOZZ	5310-637-9541	WASHER, LOCK: ARM MTG, 3/8 IN. SCREW SIZE MS35338-46 (96906)	B	EA	2	•	•	•	•	78	2
PAOZZ	5305-591-9257	SCREW, CAP, HEXAGON HEAD: ARM MTG, 3/8-24 THD SIZE, 2 1/4 IN. LG MS35306-367 (96906)	B	EA	2	•	•	•	•	78	3
PAOZZ	4730-770-0029	FITTING, LUBRICATION H18810-7 (41625)	B	EA	2	•	•	•	•	79	1
PAOZZ	4730-172-0049	FITTING, LUBRICATION: ADAPTER 1650 (95879)		EA	2	•	•	•	•	80	16
XDOZZ		SCREW, MACHINE: IDENTIFICATION PLATE, NO. 6-32 THD SIZE, 1/4 IN. LG	A	EA	2					83	5
XDOZZ		PLATE, IDENTIFICATION 813851 (41625)	A	EA	1					83	6
XDOZZ		PLUG, PIPE: HOUSING H39A00-61 (41625)	A	EA	1					83	7
XDOZZ		KNOB A29106 (41625)	A	EA	1					83	11

	(1) SMR CODE	(2) FEDERAL STOCK NUMBER	(3) DESCRIPTION REF NUMBER & MFR CODE	USABLE ON CODE	(4) UNIT OF MEAS	(5) QTY INC IN UNIT	(6) 15-DAY ORGANIZATIONAL MAINTENANCE ALW (a) 1-5	(b) 6-20	(c) 21-50	(d) 51-100	(7) ILLUSTRATION (a) FIG. NO.	(b) ITEM NO.
N	XDOZZ		KNOB, BLACK 1144 (86376)	C	EA	2					84	3
N	XDOZZ		KNOB, RED 1145 (86376)	C	EA	2					84	4
N	PAOZZ	5307-982-8935	STUD, HANDLE 1160 (86376)	C	EA	4	*	*	*	*	84	16
	MDOZZ		PLEXIGLAS, INSTRUMENT COVER MHC24-24 (98042) MANUFACTURE FROM:	A	EA	1						
	PAOZZ	9330-559-2043	PLEXIGLAS, AS REQUIRED		SH		*	*	*	*		
	MDOZZ		COVER, INSTRUMENT 9-18-243 (26571) MANUFACTURE FROM:	B	EA	1						
	PAOZZ	9330-559-2043	PLEXIGLAS, AS REQUIRED		SH		*	*	*	*		
			GROUP 57 - FAN, ENGINE ROOM									
	PAOZZ	4140-457-0603	FAN, CIRCULATING: AIR, 8 IN. 8FC24 (97418)	AB	EA	2	*	*	*	*	88	
	PAOZZ		SWITCH, TOGGLE FAN 15605 (97418)	AB	EA	1	*	*	*	*	88	1
	XAOZZ		MOTOR: 24V, DC, FAN MD24-2 (97418)	AB	EA	1					88	2
	XDOZZ		HOLDER, BRUSH, W/CAP M6-1 (97418)	AB	EA	1					88	3
	PAOZZ	5977-116-7837	BRUSH, ELECTRIC, CONTACT: FAN MOTOR M7-3 (97418)	AB	EA	1	*	*	*	*	88	4
	PAOZZ	4140-422-0386	FAN, CIRCULATING, BRACKET, 12 IN. 12FC24 (97418)	C	EA	1	*	*	*	*	89	
	PAOZZ		SWITCH, TOGGLE FAN 8290K16 (97418)	C	EA	1	*	*	*	*	89	1
	XAOZZ		MOTOR, 24V, DC, FAN MD24-12 (97418)	C	EA	1					89	2
	XDOZZ		HOLDER, BRUSH W/CAP M6-1 (97418)	C	EA	1					89	3
	PAOZZ	5977-116-7837	BRUSH, ELECTRIC CONTACT, FAN MOTOR M7-3 (97418)	C	EA	1	*	*	*	*	89	4
			GROUP 58 - ENGINE CONTROLS AND DISTRIBUTION PANEL									
	XDOZZ		HOLDER, FUSE HPBD (71400)	A	EA	16					90	2
	PACZZ	5920-280-3168	FUSE, CARTRIDGE FOTA32V15A (81349)	A	EA	16	*	*	*	*	90	3
C	PAOZZ	5930-725-9991	SWITCH, PUSH BUTTON: STARTING 8444K3 (27193)	A	EA	4	*	*	*	*	90	4
	PAOZZ	5975-682-0306	SEAL, SWITCH MC3030 (97539)	A	EA	4	*	*	*	*	90	5
	PAOZZ	5930-574-2929	SWITCH, ROTARY: NAVIGATIONAL LIGHTS C115085 (82121)	A	EA	2	*	*	*	*	90	6
	XDOZZ		GUARD, BUTTON: STARTER SHIT .. 120033 (98042)	A	EA	4					90	7

	(1) SMR CODE	(2) FEDERAL STOCK NUMBER	(3) DESCRIPTION REF NUMBER & MFR CODE	USABLE ON CODE	(4) UNIT OF MEAS	(5) QTY INC IN UNIT	(6) 15-DAY ORGANIZATIONAL MAINTENANCE ALW (a) 1-5	(b) 6-20	(c) 21-50	(d) 51-100	(7) ILLUSTRATION (a) FIG. NO.	(b) ITEM NO.
	PAOZZ	5930-615-9376	SWITCH, TOGGLE: NAVIGATIONAL LIGHT MS35059-21 (96906)	A	EA	1	*	*	*	*	90	8
R	PAOZZ	5930-539-7013	SEAL, SWITCH M10308 (97539)	A	EA	9	*	*	*	*	90	9
	PAOZZ	5930-636-2821	SWITCH, TOGGLE: MS35059-24 (96906)	A	EA	8	*	*	*	*	90	10
	XDOZZ		HOLDER, FUSE FHM23W (81349)	B	EA	16					91	2
	PACZZ	5920-686-9548	FUSE, 10 AMPERE FOSA250V10A (81349)	B	EA	16	*	*	*	*	91	3
	PAOZZ	5930-589-5269	SWITCH, PUSH; HORN AND STARTER D801W2 (81640)	B	EA	6	*	*	*	*	91	4
	PAOZZ	5930-800-5770	BOOT, RUBBER: HORN AND STARTER SWITCH MIL85423-7TYPEB (81349)	B	EA	6	*	*	*	*	91	5
	PAOZZ	5930-636-2821	SWITCH, TOGGLE: LIGHT MS35059-24 (96906)	B	EA	8	*	*	*	*	91	6
	PAOZZ	5930-600-6088	BOOT, RUBBER: LIGHT SWITCH M30308 (97539)	B	EA	8	*	*	*	*	91	7
C	PAOZZ	5935-280-2390	RECEPTACLE, ELECTRICAL 900096202-74026 (80064)		EA	9	*	*	*	*	92	1
	PAOZZ	5935-926-3078	PLUG, ELECTRICAL: RADIO, LIGHT AND FAN MS17791 (96906)	BC	EA	9	*	*	*	*	92	2
	PAOZZ	5930-522-1425	SWITCH, TOGGLE, DPDT 900096202-74427 (80064)	BC	EA	6	*	*	*	*	92	3
	PAOZZ	6625-232-8408	AMMETER: 100-0-100 3778 (98738)	B	EA	2	*	*	*	*	92	4
	PAOZZ	6625-404-3279	AMMETER: 150-0-150 3779 (98738)	B	EA	1	*	*	*	*	92	5
	PAOZZ	5935-755-5851	COVER, RECEPTACLE 900096202-74031PC119 (80064)	B	EA	9	*	*	*	*	92	6
	PAOZZ	5935-241-2538	INSERT, RECEPTACLE 900096202-74026APC14 (80064)	B	EA	9	*	*	*	*	92	7
	PAOZZ	5930-258-5502	SWITCH, ROTARY 90008620-74207 (80064)	BC	EA	2	*	*	*	*	92	8
	PAOZZ		GAGE, PRESSURE: CONTROL PANEL TYPE30FM2-1-2IN (38508)	A	EA	1	*	*	*	*	92	9
	PAOZZ	6210-944-1090	LIGHT, INDICATOR: RED, MECHANICAL DIMMER 13207E2025-1 (97403)	B	EA	4	*	*	*	*	92	12
	XDOZZ		GRATING, WOOD; PILOT STAND LCH0145-1847016 (80064)		EA	1					92	13
	PAOZZ		SWITCH, PUSH; HORN 9-5-5478L (80064)	A	EA	1	*	*	*	*	93	1
	PAOZZ	6210-686-4169	LIGHT, INDICATOR: ENGINE ALARM PANEL L5108G (81640)	A	EA	4	*	*	*	*	93	2
	PAOZZ	6240-153-7836	LAMP, INCANDESCENT: ENGINE ALARM LIGHT MS25237-327 (96906)	A	EA	4	*	*	*	*	93	3
R	PAOZZ	5935-280-2390	RECEPTACLE, ELECTRICAL: OUTLET GA58 (76714)	A	EA	10	*	*	*	*	93	4
	XDOZZ		BOX, ELECTRICAL A60ALB (00883)	A	EA	2					93	5

	(1) SMR CODE	(2) FEDERAL STOCK NUMBER	(3) DESCRIPTION REF NUMBER & MFR CODE	USABLE ON CODE	(4) UNIT OF MEAS	(5) QTY INC IN UNIT	(6) 15-DAY ORGANIZATIONAL MAINTENANCE ALW (a) 1-5	(b) 6-20	(c) 21-50	(d) 51-100	(7) ILLUSTRATION (a) FIG. NO.	(b) ITEM NO.
R	PAOZZ		LIGHT, INSTRUMENT PANEL MS17275 (96906)		EA	2	*	*	*	*	93	6
	PAOZZ	6240-155-7926	LAMP, INCANDESCENT: INSTRUMENT PANEL MS15613-2 (96906)		EA	2	*	*	*	*	93	7
R	PAOZZ		PLUG, CONNECTOR 701-1 (05381)	A	EA	9	*	*	*	*	93	8
	PAOZZ	6680-456-1583	TACHOMETER, ENGINE 5138365 (72582)		EA	4	*	*	*	*	93	9
	PAOZZ	6625-983-5947	AMMETER: 0-100 AMPS 73005 (89925)	A	EA	2	*	*	*	*	93	10
	PAOZZ	6685-113-5440	THERMOMETER: WATER TEMPERATURE 6402506 (72582)		EA	2	*	*	*	*	93	11
	PAOZZ	6685-113-5441	THERMOMETER: WATER TEMPERATURE 6408505 (72582)	A	EA	2	*	*	*	*	93	12
R	PAOZZ	6625-404-3277	AMMETER, DC: 200-0-200 73103 (89925)	AC	EA	2	*	*	*	*	93	13
	PAOZZ	6620-199-8730	GAGE, PRESSURE: OIL, ENGINE 6460283 (72582)		EA	4	*	*	*	*	93	14
	PAOZZ	6620-494-9620	GAGE, PRESSURE: OIL, TORQUE CONVERTER 6460464 (72582)		EA	2	*	*	*	*	93	15
	PAOZZ	5930-655-1575	SWITCH, TOGGLE: LIGHT MS35059-22 (96906)	A	EA	1	*	*	*	*	93	22
	PAOZZ	5310-833-3564	SEAL, SWITCH 30F000 (02929)	A	EA	1	*	*	*	*	93	23
	XDOZZ		BOX A40ANF (00843)	A	EA	1					93	24
	PAOZZ	2910-646-9727	FUEL CYLINDER, ETHER: START AID LP657 (61112)	A	EA	4	*	*	*	*	94	1
	XBOZZ		LINE, FUEL LP3239-48 (61112)	A	EA	4					94	2
	PAOZZ	2990-919-6564	ATOMIZER LP2377-11 (61112)	A	EA	4	*	*	*	*	94	3
	PAOZZ	2910-076-9751	VALVE ASSEMBLY LP3234-1 (61112)	A	EA	4	*	*	*	*	94	4
	PAOZZ	5305-639-8375	SCREW, SELF-TAPPING: INSTRUMENT PANEL PLEXAGLASS COVER, PAN HEAD, NO. 10-32 THD SIZE, 3/4 IN. LG FF3107 (81348)	C	EA	56	*	*	*	*	95	1
N	MOOZZ		PLEXAGLASS: INSTRUMENT PANEL COVER 145-4510932-18 (80064) MANUFACTURE FROM:	C	EA	2					95	2
N	PAOZZ	9330-559-2043	PLEXAGLASS, 1/4 IN. THK, AS REQUIRED MILP8184 (81348)		SH		*	*	*	*	95	
N	MOOZZ		GASKET, NEOPRENE: INSTRUMENT COVER 145-4510932-17 (80064) MANUFACTURE FROM:	C	EA	4					95	3
N	PAOZZ	5330-261-5761	GASKET, NEOPRENE, 1/8 IN. THK, AS REQUIRED HH0156 (81348)		SH		*	*	*	*	95	
N	PAOZZ		GAGE, RAMP HYDRAULIC PRESSURE PATTERNDFMO-5000 (38508)	C	EA	1	*	*	*	*	95	4

	(1) SMR CODE	(2) FEDERAL STOCK NUMBER	(3) DESCRIPTION REF NUMBER & MFR CODE	USABLE ON CODE	(4) UNIT OF MEAS	(5) QTY INC IN UNIT	(6) 15-DAY ORGANIZATIONAL MAINTENANCE ALW (a) 1-5	(b) 6-20	(c) 21-50	(d) 51-100	(7) ILLUSTRATION (a) FIG. NO.	(b) ITEM NO.
N	PAOZZ		GAGE ACCUMULATOR PATTERNDWG-5000 (38508)	C	EA	1	*	*	*	*	95	5
N	PAOZZ		GAGE, STEERING SYSTEM PRESSURE PATTERNDWG-5000 (38508)	C	EA	1	*	*	*	*	95	8
N	PAOZZ	6240-155-7836	LAMP: 3W, 28V MS25237327 (96906)	C	EA	4	*	*	*	*		
N	PAOZZ	6240-242-0003	LAMP: 50W 50AR530V (08108)	C	EA	12	*	*	*	*		
N	PAOZZ	6240-155-7836	LAMP: 21 CP MS15584-6 (96906)	C	EA	1	*	*	*	*		
N	XDOZZ		BLOCK: TERMINAL, 8 PT 8-142 (71785)	C	EA	1						
N	PAOZZ	6240-155-7836	LAMP, INCANDESCENT, 28V, ENGINE ALARM LIGHT MS25237-327 (96906)	C	EA	1	*	*	*	*		
N	PAOZZ	5975-223-3512	COUPLING, POLYVINYL CHLORIDE 302-4510952-121 (80064)	C	EA	1	*	*	*	*		
N	XDOZZ		BLOCK, TERMINAL, END PIECE 302-4510952-29A (80064)	C	EA	1						
N	XDOZZ		CLIP, GROUNDING 302-4510952-139 (80064)	C	EA	1						
N	PAOZZ	6240-155-8726	LAMP: 15 CP MS15584-8 (96906)	C	EA	2	*	*	*	*		
N	PAOZZ	6240-269-0966	LAMP: 10 CP MS15584-11 (96906)	C	EA	3	*	*	*	*		
N	PAOZZ	6240-155-7926	LAMP: 3 CP MS15613-2 (96906)	C	EA	2	*	*	*	*		
	PAOZZ	6685-631-8243	THERMOMETER: OIL TEMPERATURE 1513556 (72582)		EA	2	*	*	*	*		
	PAOZZ	6625-411-4030	SHUNT, AMMETER: 150A, 100MV, W/BASE GE50-140034PZAA (97524)	BC	EA	1	*	*	*	*		
	PAOZZ	6625-404-3278	SHUNT, AMMETER: 100A, 100MV, W/BASE GE50-140034PKAA (97524)	BC	EA	2	*	*	*	*		
	XDOZZ		BLOCK, TERMINAL: 6PT, 250MCM 427 (89020)	BC	EA	1						
	PAOZZ	5930-727-6904	CONTROL, ALARM: OIL PRESSURE SWITCH 1507359 (72582)	B	EA	1	*	*	*	*		
	PAOZZ	5930-669-7872	CONTROL, ALARM: SWITCH, OIL PRESSURE 1507289 (72582)		EA	2	*	*	*	*		
	PAOZZ	5930-258-5394	SWITCH: ENGINE STARTING 1996097 (72582)		EA	2	*	*	*	*		
	PAOZZ	5930-229-3371	SWITCH, TOGGLE: ALARM SHUTOFF 3292162 (72582)		EA	2	*	*	*	*		
	PAOZZ	5935-539-2651	CONNECTOR, ELECTRICAL MS3106A08SLAS (96906)	A	EA	2	*	*	*	*		
	PAOZZ	5935-223-0577	CLAMP, CONNECTOR AN3057-4 (88044)	A	EA	2	*	*	*	*		
	PCCZZ	6140-263-4603	BATTERY, DRY CHARGE: 6V, 200 AMP HOUR WB131TYPE70 (81348)		EA	4	*	*	*	*		

(1) SMR CODE	(2) FEDERAL STOCK NUMBER	(3) DESCRIPTION REF NUMBER & MFR CODE	USABLE ON CODE	(4) UNIT OF MEAS	(5) QTY INC IN UNIT	(6) 15-DAY ORGANIZATIONAL MAINTENANCE ALW (a) 1-5	(b) 6-20	(c) 21-50	(d) 51-100	(7) ILLUSTRATION (a) FIG. NO.	(b) ITEM NO.
		GROUP 59 - NAVIGATIONAL LIGHTS AND HORN									
PAOZZ		SWITCH, PUSH: ENGINE ROOM LIGHTS 954718L (80064)	A	EA	2	*	*	*	*	96	1
PAOZZ	5930-503-1836	SWITCH, PRESSURE: FUEL AND OIL M1670 (74400)	A	EA	4	*	*	*	*	96	2
PAOZZ	5930-727-6904	SWITCH, FUEL PRESSURE; NORMAL-OPEN 1507359 (99974)	C	EA	1	*	*	*	*	96	2
PAOZZ		SWITCH, PRESSURE: LOW OIL M1554 (74400)	A	EA	2	*	*	*	*	96	3
PAOZZ	6210-399-7028	FIXTURE, LIGHT: CARGO WELL MS17159-98 (96906)		EA	2	*	*	*	*	96	4
PAOZZ	6240-155-7790	LAMP, INCANDESCENT: SIDE AND CARGO WELL LIGHT MS15584-16 (96906)		EA	4	*	*	*	*	96	5
PAOZZ	6220-028-3445	LIGHT, PORT SIDE MS17847SYMBOL207-2 (96906)		EA	1	*	*	*	*	96	6
PAOZZ	6220-028-3444	LIGHT, STARBOARD SIDE MS17847SYMBOL208-2 (96906)		EA	1	*	*	*	*	96	7
PAOZZ	6220-782-9404	LIGHT, MASTHEAD MS17847SYMBOL218-1 (96906)		EA	1	*	*	*	*	96	8
PAOZZ	6240-269-0966	LAMP, INCANDESCENT: ANCHOR, MAST AND STERN LIGHT MS15584-11 (96906)		EA	3	*	*	*	*	96	9
PAOZZ	6220-054-2067	LIGHT, ANCHOR MS17847SYMBOL217-1 (96906)	AB	EA	1	*	*	*	*	96	10
PAOZZ	6220-062-6647	LIGHT, STERN MS17847SYMBOL211-1 (96906)		EA	1	*	*	*	*	96	11
PAOZZ	6220-054-2067	LIGHT, NOT UNDER COMMAND: RED LENS MS17847SYMBOL217-1 (96906)	AB	EA	2	*	*	*	*	96	12
PAOZZ	6240-155-8725	LAMP, INCANDESCENT: NOT UNDER COMMAND, LIGHT MS15584-6 (96906)	AB	EA	2	*	*	*	*	96	13
PAOZZ	6210-225-9210	FIXTURE, ELECTRIC LIGHT: ENGINE ROOM 591 (89617)	AC	EA	10	*	*	*	*	96	14
PAOZZ	6240-519-0853	LAMP, INCANDESCENT: CEILING LIGHT 50ARS24V (08108)	A	EA	10	*	*	*	*	96	15
PAOZZ	6350-224-4945	HORN NAVIGATION 1CH303 (98905)		EA	1	*	*	*	*	96	16
PAOZZ	5305-006-8283	SCREW, SELF-TAPPING: FOREMAST CLEAT, 1/4-20 THD SIZE, 1 IN. LG MS24628-66 (96906)	C	EA	2	*	*	*	*	97	1
PAOZZ		LIGHT, CLEAR LENS MS17847SYMBOL218 (96906)		EA	1	*	*	*	*	97	2
PAOZZ	6240-155-8725	LAMP MS15584-6 (96906)	C	EA	1	*	*	*	*	97	3
PAOZZ	5315-982-1349	PIN, HAIR COTTER: MAST DECK PIN LHCOT3 (73145)	C	EA	2	*	*	*	*	97	4
PAOZZ		WASHER, FLAT: MAIN MAST MTG PIN 125-4510928-45 (80064)	C	EA	4	*	*	*	*	97	5

(1) SMR CODE	(2) FEDERAL STOCK NUMBER	(3) DESCRIPTION REF NUMBER & MFR CODE	USABLE ON CODE	(4) UNIT OF MEAS	(5) QTY INC IN UNIT	(6) 15-DAY ORGANIZATIONAL MAINTENANCE ALW (a) 1-5	(b) 6-20	(c) 21-50	(d) 51-100	(7) ILLUSTRATION (a) FIG. NO.	(b) ITEM NO.
MOOZZ		PIN, MAST HEEL; MAST DECK PIN 125-4510928-64 (80064) MANUFACTURE FROM:	C	EA	1					97	6
PAOZZ	9510-596-3564	ROD, 2 IN. DIA, STAINLESS STEEL, AS REQUIRED S7720COMPOSITION302CONDITIONA (81349)		EA		*	*	*	*	97	
PAOZZ		NUT, SELF-LOCKING; SHEAVE PIN 79NE080 (17224)	C	EA	1	*	*	*	*	97	7
PAOZZ	5315-982-1350	PIN, SHEAVE; MAST TOP PULLEY, 5/16 IN. DIA, 1 1/2 IN. LG, DRILLED SHANK 98306A (39428)	C	EA	1	*	*	*	*	97	8
PAOZZ	3020-436-7094	SHEAVE, MAST BOTTOM 125-4510928-39 (80064)	C	EA	1	*	*	*	*	97	9
PAOZZ		LIGHT, NOT UNDER COMMAND, RED LENS MS17847SYMBOL214 (96906)	C	EA	1	*	*	*	*	97	10
PAOZZ	6240-155-8725	LAMP MS15584-6 (96906)	C	EA	1	*	*	*	*	97	11
PAOZZ	6145-260-8795	CABLE; MAST AND BOW LIGHTS MILC915-6TYPEDM03 (81349)		FT	BK	*	*	*	*	97	12
PAOZZ	5315-236-8359	PIN, COTTER; TOP MAST PULLEY PIN, 1/8 IN. DIA, 1 IN. LG MS24665-370 (96906)	C	EA	1	*	*	*	*	97	13
PAOZZ	5310-625-5756	WASHER, FLAT; MAST TOP SHEAVE PIN RETAINING, 5/16 IN. MS15795-812 (96906)	C	EA	1	*	*	*	*	97	14
PAOZZ	5315-982-1343	PIN, TOGGLE; TOP SHEAVE, 3/8 IN. DIA, 4 IN. LG 3-8INX4INLG (08716)	C	EA	3	*	*	*	*	97	15
PAOZZ	3020-833-2501	SHEAVE MAST TOP 125-4510928-38 (80064)	C	EA	1	*	*	*	*	97	16
MOOZZ		LINE MANILA MAST 125-4510928-48 (80064) MANUFACTURE FROM:	C	EA	1					97	17
PAOZZ	4020-689-5688	ROPE, MANILA, 1 1/8 IN., CIRCUMFERENCE, AS REQUIRED TR605TYPEMCLASS2 (81348)		CL		*	*	*	*	97	
MOOZZ		STERNMAST 125-4510928-33 (80064) MANUFACTURE FROM:	C	EA	1						
PAOZZ	4710-277-5466	PIPE, STEEL, 2 IN. ID, SCHEDULE 40, 3 FT, 6 IN, REQUIRED WAP40RCLASSA53AERW53EMA53LW (81348)		FT		*	*	*	*		
PAOZZ	5315-982-1634	PIN, TOGGLE; STERN MAST SOCKET 3-8INX31-2INLGSTL (74427)	C	EA	1	*	*	*	*		
MOOZZ		HALYARD MAST; 3/4 IN, 125-4510928-49 (80064) MANUFACTURE FROM:	C	EA	1						
PAOZZ	4020-003-6293	LINE, BRAIDED, NYLON, 1/4 IN. DIA, AS REQUIRED MILR24050 (81349)		FT		*	*	*	*		
MOOZZ		RUBBER; MAST SECURING COLLAR 125-4510928-50 (80064) MANUFACTURE FROM:	C	EA	2						
PAOZZ	5330-182-1433	GASKET, NEOPRENE, 1/4 IN. THK, AS REQUIRED HH0156 (81348)		SH		*	*	*	*		

(1) SMR CODE	(2) FEDERAL STOCK NUMBER	(3) DESCRIPTION REF NUMBER & MFR CODE	USABLE ON CODE	(4) UNIT OF MEAS	(5) QTY INC IN UNIT	(6) 15-DAY ORGANIZATIONAL MAINTENANCE ALW (a) 1-5	(b) 6-20	(c) 21-50	(d) 51-100	(7) ILLUSTRATION (a) FIG. NO.	(b) ITEM NO.
PAOZZ		ADHESIVE 3M2216BM (94959)	C	BT	1	*	*	*	*		
PAOZZ		SNAP BOAT: FLAG HALYARD, NO. 1 F10613 (46576)	C	EA	2	*	*	*	*		
PAOZZ	6210-399-6339	LIGHT, INSTRUMENT PANEL, RED MILF16377-35 (81349)	C	EA	1	*	*	*	*		
PAOZZ	6240-155-7986	LAMP, INSTRUMENT PANEL MS15613-2 (96906)	C	EA	1	*	*	*	*		
XDOZZ		ENCLOSURE, WATER TIGHT A606CHNF (82260)	BC	EA	1						
PAOZZ	6140-195-5339	BATTERY, PORTABLE, STORAGE BB257U (81349)	C	EA	1	*	*	*	*		
PAOZZ	6145-926-3452	CABLE, 3/4CH 125V, SMALL BOAT MILC915-2TYPEDBSP3 (81349)	C	FT	250	*	*	*	*		
PAOZZ	6145-914-9016	CABLE, 1/4CH 125V, SMALL BOAT MILC915-2TYPEDBSP1/4 (81349)	C	FT	330	*	*	*	*		
PAOZZ	6145-997-6433	CABLE, 3/4CH 125V, SMALL BOAT MILC915TYPEFBSP3 (81349)	C	FT	25	*	*	*	*		
PAOZZ	6145-184-5892	CABLE, 1/4INCH 1000V, ARMORED MILC2194-2TYPEDSGA1/4 (81349)		FT	100	*	*	*	*		
PAOZZ	6145-184-5880	CABLE, 1/5INCH 1000V, ARMORED MILC2194-2TYPEDSGA150 (81349)	C	FT	50	*	*	*	*		
PAOZZ	5930-986-0755	BUTTON, PUSH WATER TIGHT FOR HORN M626 (13445)	C	EA	1	*	*	*	*		
PAOZZ	5330-202-2588	PACKING ASSEMBLY: MAST AND BOW LIGHTS CABLE MS16178-3 (96906)	C	EA	1	*	*	*	*		
PAOZZ	5330-202-2587	PACKING, ASSEMBLY: CABLE ASSEMBLY MS16178-2 (96906)	C	EA	1	*	*	*	*		
PAOZZ	5975-503-4693	TUBE, STUFF NYLON: STERN LIGHT MILS19622-2 (81349)	C	EA	1	*	*	*	*		
PAOZZ	5975-877-6955	TUBE, STUFF NYLON: UNDER STATIC ISOLATOR CABINET MILS19622-3 (81349)	C	EA	4	*	*	*	*		
PAOZZ	5330-202-2590	PACKING ASSEMBLY: UNDER STATIC ISOLATOR CABINET M19622-18-0018 (81349)	C	EA	4	*	*	*	*		
PAOZZ	5975-808-4064	TUBE, STUFF NYLON M19622-3-202 (81349)	C	EA	1	*	*	*	*		
PAOZZ		LIGHT, ANCHOR, CLEAR MS17647SYMBOL203 (96906)	C	EA	1	*	*	*	*		
		GROUP 60 - HELM UNIT STEERING									
N PAOZZ	5306-216-8170	BOLT, MACHINE: STEERING COLUMN, 3/8-16 THD SIZE, 2 3/4 IN. LG L525-15 (46717)	C	EA	4	*	*	*	*		
N PAOZZ	5310-584-7799	WASHER: STEERING WHEEL, 3/4 IN. ID, 1 1/2 IN. OD, 1/8 IN. THK MS15795-822 (96906)	C	EA	1	*	*	*	*		

(1) SMR CODE	(2) FEDERAL STOCK NUMBER	(3) DESCRIPTION REF NUMBER & MFR CODE	USABLE ON CODE	(4) UNIT OF MEAS	(5) QTY INC IN UNIT	(6) 15-DAY ORGANIZATIONAL MAINTENANCE ALW (a) 1-5	(b) 6-20	(c) 21-50	(d) 51-100	(7) ILLUSTRATION (a) FIG. NO.	(b) ITEM NO.
		GROUP 61 - PIPING, STEERING									
MOOZZ		HOSE ASSEMBLY: 24 IN. LG HMC61-20 (98062) MANUFACTURE FROM:	A	EA	1					100	1
PAOZZ	4720-057-8612	HOSE, AS REQUIRED		FT		*	*	*	*	100	
PAOZZ		FITTING CA24-24HB (30327)	A	EA	2	*	*	*	*	100	
MOOZZ		HOSE ASSEMBLY HMC61-43 (98062) MANUFACTURE FROM:	A	EA	1					100	2
PAOZZ		HOSE, 24 IN. REQUIRED U124 (30327)		FT		*	*	*	*	100	
PAOZZ		CONNECTOR 4412-128 (01276)	A	EA	2	*	*	*	*	100	
XDOZZ		ELBOW, PIPE TO TUBE: FLOW CONTROL OUTLET 10-6CBTX5 (08752)	A	EA	1					100	3
XDOZZ		BUSHING, PIPE: PUMP INLET 2081-24-168 (01276)	A	EA	2					100	4
XDOZZ		ELBOW, PIPE SWIVEL: PUMP INLET 60UG24-24 (30327)	A	EA	4					100	5
XDOZZ		FITTING, SWIVEL UNION: PUMP OUTLET 60SA08-12 (30327)	A	EA	2					100	6
PAOZZ	4730-021-1802	ADAPTER, STRAIGHT: TANK OUTLET LINE 16-12FBTX5 (45681)	A	EA	1	*	*	*	*	100	8
XDOZZ		TEE, UNION: HYDRAULIC LINES 16JBTX5 (08752)	A	EA	1					100	9
PAOZZ	4730-628-4816	REDUCER, TUBE: LINE FITTING 161-12TRBTX5 (45681)	A	EA	1	*	*	*	*	100	10
PAOZZ	4730-231-3016	ELBOW, PIPE TO TUBE: FILTER LINE 12-8CBTX5 (45681)	A	EA	3	*	*	*	*	100	11
PAOZZ	4730-784-1879	ELBOW, TUBE: STEERING WHEEL LINE 10EBTX5 (08752)	A	EA	1	*	*	*	*	100	12
XDOZZ		ADAPTER, STRAIGHT: STEERING WHEEL LINE 106FBTX5 (08752)	A	EA	1					100	13
XDOZZ		REDUCER, PIPE: STEERING WHEEL LINE 249008-06 (30327)	A	EA	4					100	14
PAOZZ	4730-865-9251	ADAPTER, STRAIGHT: LINE FITTING 12-8FBTX5 (08752)	A	EA	7	*	*	*	*	100	15
PAOZZ		ELBOW, PIPE SWIVEL: STEERING CYLINDER 60UA08-12 (30327)	A	EA	2	*	*	*	*	100	16
PAOZZ		ADAPTER, STRAIGHT: PUMP OUTLET 12FBTL5 (08752)	A	EA	2	*	*	*	*	100	17
XDOZZ		COUPLING, SWIVEL: PUMP OUTLET 60BG12-12 (30327)	A	EA	2					100	18
PAOZZ	4730-838-4521	ELBOW, TUBE: LINE FITTING 12EBTX5 (08752)	A	EA	1	*	*	*	*	100	19
R PAOZZ	4730-815-3439	TEE, PIPE: TANK RELIEF LINE 16RBTX5 (08752)	A	EA	1	*	*	*	*	100	20

(1) SMR CODE	(2) FEDERAL STOCK NUMBER	(3) DESCRIPTION REF NUMBER & MFR CODE	USABLE ON CODE	(4) UNIT OF MEAS	(5) QTY INC IN UNIT	(6) 15-DAY ORGANIZATIONAL MAINTENANCE ALW (a) 1-5	(b) 6-20	(c) 21-50	(d) 51-100	(7) ILLUSTRATION (a) FIG. NO.	(b) ITEM NO.
XDOZZ		REDUCER: RELIEF LINE 249816-12 (30327)	A	EA	1					100	21
PAOZZ	6685-087-6985	GAGE, PRESSURE: HYDRAULIC STEERING TYPE5PATDMF (38508)		EA	2	*	*	*	*	100	22
XDOZZ		ELBOW, UNION: PRESSURE GAGE LINE 4CBTXS (08752)	A	EA	1					100	23
XDOZZ		TEE, TUBE: PRESSURE GAGE LINE 35824-10 (79470)	A	EA	1					100	24
XDOZZ		REDUCER, TUBE: PRESSURE GAGE LINE 35827-10-4 (79470)	A	EA	1					100	25
PAOZZ	4730-688-4815	REDUCER, STRAIGHT: EXPANSION TANK LINE TO STORAGE TANK 12-4TRBTXS (08752)	A	EA	1	*	*	*	*	100	26
PAOZZ	4730-688-4816	REDUCER, STRAIGHT: STORAGE TANK 16-12TRBTXS (08752)	A	EA	1	*	*	*	*	100	27
PAOZZ	4730-289-5484	ADAPTER, PIPE TO TUBE: EXPANSION TANK LINE 4-4FBTXS (08752)	A	EA	1	*	*	*	*	100	28
PAOZZ	4730-911-5342	PLUG, PIPE: SQ HD, EXPANSION TANK 1-4SHPS (24835)	A	EA	1	*	*	*	*	100	29
PAOZZ	4820-248-3701	VALVE BALL 1-244488SE (98991)		EA	1	*	*	*	*	100	30
XAOZZ		BODY 44-05-1-4 (98991)		EA	1					100	
XAOZZ		END PIPE 44-05-2-4 (98991)		EA	1					100	
XAOZZ		BALL 44-05-3-4 (98991)		EA	1					100	
XAOZZ		STEM 44-05-4-4 (98991)		EA	1					100	
XAOZZ		SEAT 44-05-5-60 (98991)		EA	1					100	
R PAOZZ	2030-113-9479	WHEEL, STEERING: 36 IN. MHC61PC26 (98042)	AD	EA	1	*	*	*	*	100	31
N PAOZZ	2030-115-0121	WHEEL HELM: STEERING CONTROL, 30 IN. 145-4510932-23 (80064)	C	EA	1	*	*	*	*	100	31
PAOZZ	4720-067-0454	HOSE: 1/2 IN. 211-8 (03925)	B	FT	4	*	*	*	*	101	1
PAOZZ	4720-922-5136	HOSE, FLEXIBLE: 3/4 IN. ID 421-12 (08752)	B	FT	1	*	*	*	*	101	2
PAOZZ	4720-407-6550	HOSE, FLEXIBLE: 3/16 IN. ID 211-4 (03925)	B	FT	3	*	*	*	*	101	3
XDOZZ		FITTING, ELBOW HOSE: PUMP INLET 1085-6-8 (03925)	B	EA	1					101	4
PAOZZ	4730-789-3082	FITTING, SWIVEL, HOSE: PUMP INLET 319-8 (03925)	B	EA	1	*	*	*	*	101	5
XDOZZ		ELBOW: 90 DEG, MALE, PUMP OUTPUT LINE 1094-8-8 (03925)	B	EA	1					101	7
XDOZZ		ADAPTER: PUMP AND CYLINDER LINE 1012-8-8 (03925)	B	EA	1					101	8
XDOZZ		ADAPTER: STEERING CONTROL 1012-6-8 (03925)	B	EA	1					101	9

(1) SMR CODE	(2) FEDERAL STOCK NUMBER	(3) DESCRIPTION REF NUMBER & MFR CODE	USABLE ON CODE	(4) UNIT OF MEAS	(5) QTY INC IN UNIT	(6) 15-DAY ORGANIZATIONAL MAINTENANCE ALW (a) 1-5	(b) 6-20	(c) 21-50	(d) 51-100	(7) ILLUSTRATION (a) FIG. NO.	(b) ITEM NO.
XDOZZ		COUPLING: BULKHEAD 210-1-21N (00986)	B	EA	1					101	10
XDOZZ		FITTING, SWIVEL, HOSE: 3/4 IN., PUMP OUTLET 20642-12-12 (08752)	B	EA	1					101	11
PAOZZ	4730-618-7057	ELBOW: 3/4 IN., MALE, PUMP OUTLET 12-8CTX (08752)	B	EA	1	•	•	•	•	101	12
XDOZZ		FITTING, HOSE END: TANK LINE 20142-12-12 (08752)	B	EA	1					101	13
XDOZZ		REDUCER, CONNECTOR: FLOW DIVIDER 0102-8-6 (08752)	B	EA	1					101	14
XDOZZ		FITTING, HOSE END: MALE, COUNTERBALANCE VALVE 356-8-4 (03925)	B	EA	1					101	15
XDOZZ		FITTING, SWIVEL, HOSE END: COUNTERBALANCE VALVE 416-4-4 (03925)	B	EA	1					101	16
XDOZZ		ELBOW: 90 DEG, COUNTERBALANCE VALVE 1025-6-4 (03925)	B	EA	1					101	17
XDOZZ		BUSHING, REDUCING: 1/2 X 3/8 IN., COUNTERBALANCE VALVE 1093-8-6 (03925)	B	EA	1					101	18
PAOZZ	2030-115-0121	WHEEL, HELM: STEERING GUN10-23 (26571)	B	EA	1	•	•	•	•	101	19
N MOOZZ		HOSE FLEXIBLE: 1/2 IN. ID 516-4510940-55 (80064) MANUFACTURE FROM:	C	EA	4					102	1
N PAOZZ	4720-067-0454	HOSE FLEXIBLE, 1/2 IN., 3 FT REQUIRED FOR EACH HOSE 5F211-8 (03925)		FT		•	•	•	•	102	
N PAOZZ	4730-801-1144	CONNECTOR, MALE: HOSE TO CYLINDER 5F1012-8-8 (03925)	C	EA	8	•	•	•	•	102	2
N PAOZZ	4730-004-0732	ADAPTER, HOSE C3069X8X4 (79470)	C	EA	4	•	•	•	•	102	3
N MOOZZ		HOSE ASSEMBLY, HYDRAULIC A1332-8-8-21 (01276) MANUFACTURE FROM:	C	EA	1					102	4
N PAOZZ	4720-067-0454	HOSE, 1/2 IN. ID, AS REQUIRED 1503-8 (01276)		FT		•	•	•	•	102	
N PAOZZ		FITTING, HYDRAULIC HOSE, 1 REQUIRED PER HOSE 411-8 (01276)		EA		•	•	•	•	102	
N PAOZZ		FITTING, HYDRAULIC HOSE, 1 REQUIRED PER HOSE 326-8-8 (98441)		EA		•	•	•	•	102	
N PAOZZ	4820-462-2164	VALVE, BALL 444-4B (98991)	C	EA	8	•	•	•	•	102	5
N MOOZZ		HOSE ASSEMBLY A1332-4-6-30 (01276) MANUFACTURE FROM:	C	EA	6					102	6
N PAOZZ	4720-430-7723	HOSE, 3/8 IN. ID, AS REQUIRED 1503-6 (01276)		FT		•	•	•	•	102	
N PAOZZ		FITTING, HOSE, 1 REQUIRED PER HOSE 411-6 (01276)		EA		•	•	•	•	102	
N PAOZZ		FITTING, HOSE, 1 REQUIRED PER HOSE 412-4-6 (01276)		EA		•	•	•	•	102	

(1) Add CODE	(2) FEDERAL STOCK NUMBER	(3) DESCRIPTION REF NUMBER & MFR CODE	USABLE ON CODE	(4) UNIT OF MEAS	(5) QTY INC IN UNIT	(6) 15-DAY ORGANIZATIONAL MAINTENANCE ALW (a) 1-5	(b) 6-20	(c) 21-50	(d) 51-100	(7) ILLUSTRATION (a) FIG. NO.	(b) ITEM NO.
N MOOZZ		HOSE FLEXIBLE; 3/16 IN. ID 516-4510940-49 (80064) MANUFACTURE FROM:	C	EA	1					102	7
N PAOZZ		HOSE FLEXIBLE, 3/16 IN. ID, 2 FT, 6 IN. REQUIRED SF211-4 (03925)		FT		•	•	•	•	102	
N MOOZZ		HOSE FLEXIBLE; 3/4 IN. ID 516-4510940-50 (80064) MANUFACTURE FROM:	C	EA	1					102	8
N PAOZZ	4720-922-5136	HOSE FLEXIBLE; 3/4 IN. ID, 4 FT REQUIRED 421-21 (08752)		FT		•	•	•	•	102	
N MOOZZ		HOSE FLEXIBLE, 3/16 IN. ID 516-4510940-35 (80064) MANUFACTURE FROM:	C	EA	1					102	9
N PAOZZ		HOSE FLEXIBLE, 3/16 IN. ID, 3 FT REQUIRED SF211-4 (03925)		FT		•	•	•	•	102	
N PAOZZ	4730-263-5266	TEE; 1/2 IN. C3709X8 (79470)	C	EA	8	•	•	•	•	102	10
N MOOZZ		PIPE SEAMLESS; 1/2 IN. SCHEDULE 40 516-4510940-93 (80064) MANUFACTURE FROM:	C	EA	1					102	11
N PAOZZ		PIPE, 1/2 IN. SCHEDULE 40, AS REQUIRED MILT20157TYPEE (81349)		FT		•	•	•	•	102	
N MOOZZ		PIPE SEAMLESS; 1/2 IN. SCHEDULE 40 516-4510940-61 (80064) MANUFACTURE FROM:	C	EA	1					102	12
N PAOZZ		PIPE, 1/2 IN. SCHEDULE 40, 5 FT, 4 IN. REQUIRED MIL20157TYPEE (81349)		FT		•	•	•	•	102	
N MOOZZ		PIPE SEAMLESS; 1/2 IN. SCHEDULE 40 516-4510940-63 (80064) MANUFACTURE FROM:	C	EA	1					102	13
N PAOZZ		PIPE, 1/2 IN. SCHEDULE 40, 13 IN. REQUIRED MIL20157TYPEE (81349)		FT		•	•	•	•	102	
N MOOZZ		PIPE SEAMLESS; 1/2 IN. SCHEDULE 40 516-4510940-56 (80064) MANUFACTURE FROM:	C	EA	1					102	14
N PAOZZ		PIPE, 1/2 IN. SCHEDULE 40, 11 FT, 8 IN. REQUIRED MILT20157TYPEE (81349)		FT		•	•	•	•	102	
N PAOZZ		UNION FEMALE FORGED STEEL 1-2IN2000LBM06 (14959)	C	EA	8	•	•	•	•	102	15
N MOOZZ		PIPE SEAMLESS; 1/2 IN. SCHEDULE 40 516-4510940-59 (80064) MANUFACTURE FROM:	C	EA	3					102	16
N PAOZZ		PIPE, 1/2 IN. SCHEDULE 40, 1 FT, 3 IN. REQUIRED FOR EACH PIPE MILT20157TYPEE (81349)		FT		•	•	•	•	102	
N PAOZZ	4730-999-8582	ELBOW; 90 DEG, 1/2 IN. C3509X8 (79470)	C	EA	7	•	•	•	•	102	17
N PAOZZ	4730-490-4006	BUSHING; 3/4 IN. X 1/2 IN. 5713 763686)	C	EA	8	•	•	•	•	102	18

(1) SMR CODE	(2) FEDERAL STOCK NUMBER	(3) DESCRIPTION REF NUMBER & MFR CODE	USABLE ON CODE	(4) UNIT OF MEAS	(5) QTY INC IN UNIT	(6) 15-DAY ORGANIZATIONAL MAINTENANCE ALW (a) 1-5	(b) 6-20	(c) 21-50	(d) 51-100	(7) ILLUSTRATION (a) FIG. NO.	(b) ITEM NO.
N MBOZZ		PIPE SEAMLESS: 1/2 IN. SCHEDULE 40 516-4510940-58 (80064) MANUFACTURE FROM:	C	EA	2					102	19
N PAOZZ		PIPE, 1/2 IN. SCHEDULE 40, 2 FT, 3 IN. REQUIRED FOR EACH PIPE MIL T20157TYPEE (81349)		FT		*	*	*	*	102	
N PAOZZ	4730-542-5598	COUPLING C330928 (79470)	C	EA	1	*	*	*	*	102	20
N MOOZZ		PIPE SEAMLESS: 1/2 IN. SCHEDULE 40 516-4510940-57 (80064) MANUFACTURE FROM:	C	EA	2					102	21
N PAOZZ		PIPE, 1/2 IN. SCHEDULE 40, 9 FT REQUIRED FOR EACH PIPE MIL T20157TYPEE (81349)		FT		*	*	*	*	102	
N PAOZZ		FITTING, COMPRESSION 210 (34749)	C	EA	3	*	*	*	*	102	22
N MOOZZ		NIPPLE LONG: 1/2 IN. X 6 IN. LG 516-4510940-22 (80064) MANUFACTURE FROM:	C	EA	4					102	23
N PAOZZ		PIPE, 1/2 IN. SCHEDULE 40 , AS REQUIRED MIL T20157TYPEE (81349)		FT		*	*	*	*	102	
N MOOZZ		PIPE SEAMLESS: 1/2 IN. SCHEDULE 40 516-4510940-54 (80064) MANUFACTURE FROM:	C	EA	1					102	24
N PAOZZ		PIPE: 1/2 IN. SCHEDULE 40,,5 FT,. 10 IN. REQUIRED MIL T20157TYPEE (81349)		FT		*	*	*	*	102	
N MOOZZ		PIPE SEAMLESS: 1/2 IN. SCHEDULE 40 516-4510940-66 (80064) MANUFACTURE FROM:	C	EA	3					102	25
N PAOZZ		PIPE: 1/2 IN. SCHEDULE 40, 1 FT 1 IN. REQUIRED FOR EACH PIPE MIL T20157TYPEE (81349)		FT		*	*	*	*	102	
N MOOZZ		PIPE SEAMLESS: SCHEDULE 40, 1/2 IN. 516-4510940-96 (80064) MANUFACTURE FROM:	C	EA	1					102	26
N PAOZZ		PIPE, 1/2 IN. SCHEDULE 40, 5 IN. REQUIRED MIL T20157TYPEE (81349)		FT		*	*	*	*	102	
N MOOZZ		PIPE SEAMLESS: SCHEDULE 40, 1/2 IN. 516-4510940-95 (80064) MANUFACTURE FROM:	C	EA	1					102	27
N PAOZZ		PIPE, 1/2 IN. SCHEDULE 40, 4 FT, 3 IN. REQUIRED MIL T20157TYPEE (81349)		FT		*	*	*	*	102	
N PAOZZ	4730-008-0732	NIPPLE, HEXAGON C30692B4A (88334)	C	EA	2	*	*	*	*	102	28
N MOOZZ		PIPE, SEAMLESS: 1/2 IN. 516-4510940-104 (80064) MANUFACTURE FROM:	C	EA	1					102	29
N PAOZZ		PIPE: 1/2 IN. SCHEDULE 40;, AS REQUIRED MIL T20157TYPEE (81349)		FT		*	*	*	*		
N PAOZZ		FITTING, PIPE, CROSS 2000-8-8 (01276)	C	EA	1	*	*	*	*	102	30

(1) SMR CODE	(2) FEDERAL STOCK NUMBER	(3) DESCRIPTION REF NUMBER & MFR CODE	USABLE ON CODE	(4) UNIT OF MEAS	(5) QTY INC IN UNIT	(6) 15-DAY ORGANIZATIONAL MAINTENANCE ALW (a) 1-5	(b) 6-20	(c) 21-50	(d) 51-100	(7) ILLUSTRATION (a) FIG. NO.	(b) ITEM NO.
N MOOZZ		PIPE SEAMLESS; SCHEDULE 40, 1/2 IN. 516-4510940-94 (80064) MANUFACTURE FROM:	C	EA	1					103	1
N PAOZZ		PIPE, 1/2 IN. SCHEDULE 40, AS REQUIRED MIL T20157 TYPEE (81349)		FT		•	•	•	•	103	
N MOOZZ		HOSE FLEXIBLE; 1/2 IN. ID 516-4510940-94 (80064) MANUFACTURE FROM:	C	EA	3					103	2
N PAOZZ	4720-067-0454	HOSE FLEXIBLE, 2 IN. ID, 1 FT, 6 IN. REQUIRED FOR EACH HOSE SF211-8 (03505)		FT		•	•	•	•	103	
N MOOZZ		PIPE, SEAMLESS; 1/2 IN. SCHEDULE 40 516-4510940-99 (80064) MANUFACTURE FROM:	C	EA	2					103	3
N PAOZZ		PIPE, 1/2 IN. SCHEDULE 40, AS REQUIRED MIL T20157 TYPEE (81349)		FT		•	•	•	•	103	
N PAOZZ	4730-876-3999	NIPPLE LONG; 1/2 IN. X 2 IN. LG WA351 (81349)	C	EA	1	•	•	•	•	103	4
N MOOZZ		HOSE ASSEMBLY, HYDRAULIC A1332-8-8-21 (01276) MANUFACTURE FROM:	C	EA	1					103	5
N PAOZZ	4720-067-0454	HOSE, 1/2 IN. ID, AS REQUIRED 1503-8 (01276)		FT		•	•	•	•	103	
N PAOZZ		FITTING, HYDRAULIC HOSE, 1 REQUIRED PER HOSE 411-8 (01276)		EA		•	•	•	•	103	
N PAOZZ		FITTING, HYDRAULIC HOSE, 1 REQUIRED PER HOSE 386-8-8 (58411)		EA		•	•	•	•	103	
N MOOZZ		PIPE, SEAMLESS; 1/2 IN. MANUFACTURE FROM:	C	EA	1					103	6
N PAOZZ		PIPE, 1/2 IN. SCHEDULE 40, AS REQUIRED MIL T20157 TYPEE (81349)		FT		•	•	•	•	103	
N PAOZZ	4730-999-8928	ELBOW; 90 DEG, 1/2 IN. C350908 (79470)	C	EA	9	•	•	•	•	103	7
N MOOZZ		PIPE, SEAMLESS; 1/2 IN. SCHEDULE 40 MANUFACTURE FROM:	C	EA	1					103	8
N PAOZZ		PIPE, 1/2 IN. SCHEDULE 40, AS REQUIRED MIL T20157 TYPEE (81349)		FT		•	•	•	•	103	
N MOOZZ		PIPE SEAMLESS; 1/2 IN. SCHEDULE 40 516-4510940-70 (80064) MANUFACTURE FROM:	C	EA	1					103	9
N PAOZZ		PIPE, 1/2 IN. SCHEDULE 40, 3 FT, 3 IN. REQUIRED MIL T20157 TYPEE (81349)		FT		•	•	•	•	103	
N MOOZZ		PIPE SEAMLESS; 1/2 IN. SCHEDULE 40 MANUFACTURE FROM:	C	EA	1					103	10
N PAOZZ		PIPE, 1/2 IN. SCHEDULE 40, AS REQUIRED MIL T20157 TYPEE (81349)		FT		•	•	•	•	103	
N PAOZZ		ELBOW, STREET 7194 (63686)	C	EA	1	•	•	•	•	103	11

best copy available

	(1) SMR CODE	(2) FEDERAL STOCK NUMBER	(3) DESCRIPTION REF NUMBER & MFR CODE	USABLE ON CODE	(4) UNIT OF MEAS	(5) QTY INC IN UNIT	(6) 15-DAY ORGANIZATIONAL MAINTENANCE ALW (a) 1-5	(b) 6-20	(c) 21-50	(d) 51-100	(7) ILLUSTRATION (a) FIG. NO.	(b) ITEM NO.
N	PAOZZ	4730-490-4006	BUSHING: 3/4 IN. X 1/2 IN. 5713 (63686)	C	EA	4	•	•	•	•	103	12
N	MDOZZ		PIPE SEAMLESS: 1/2 IN. SCHEDULE 40 MANUFACTURE FROM:	C	EA	1					103	13
N	PAOZZ		PIPE, 1/2 IN. SCHEDULE 40, AS REQUIRED MILT20157TYPEE (81349)		FT		•	•	•	•	103	
N	MDOZZ		PIPE SEAMLESS: 1/2 IN. SCHEDULE 40 516-4510940-71 (80064) MANUFACTURE FROM:	C	EA	1					103	14
N	PAOZZ		PIPE, 1/2 IN. SCHEDULE 40, 2 FT, 4 IN. REQUIRED MILT20157TYPEE (81349)		FT		•	•	•	•	103	
N	PAOZZ	4730-263-5266	TEE: 1/2 IN. C3709X8 (79470)	C	EA	8	•	•	•	•	103	15
N	PAOZZ	4730-004-0732	NIPPLE, HEXAGON C3069X8X4 (88334)	C	EA	2	•	•	•	•	103	16
N	PAOZZ		REDUCER 3-4INX1-2IN (14959)	C	EA	2	•	•	•	•	103	17
N	PAOZZ	4730-278-3561	NIPPLE CLOSE: 1/2 IN. X 1 1/8 IN. LG WWN351 (81348)	C	EA	1	•	•	•	•	103	18
N	MDOZZ		PIPE SEAMLESS: 1/2 IN. SCHEDULE 40 MANUFACTURE FROM:	C	EA	1					103	19
N	PAOZZ		PIPE, 1/2 IN. SCHEDULE 40, AS REQUIRED MILT20157TYPEE (81349)		FT		•	•	•	•	103	
N	MDOZZ		PIPE SEAMLESS: 1/2 IN. SCHEDULE 40 MANUFACTURE FROM:	C	EA	1					103	20
N	PAOZZ		PIPE, 1/2 IN. SCHEDUCLE 40, AS REQUIRED MILT20157TYPEE (81349)		FT		•	•	•	•	103	
N	MDOZZ		PIPE SEAMLESS: 1/2 IN. SCHEDULE 40 MANUFACTURE FROM:	C	EA	1					103	21
N	PAOZZ		PIPE, 1/2 IN. SCHEDULE 40, AS REQUIRED MILT20157TYPEE (81349)		FT		•	•	•	•	103	
N	MDOZZ		NIPPLE, LONG: 1/2 IN. X 6 IN. LG 516-4510940-22 (80064) MANUFACTURE FROM:	C	EA	3					103	22
N	PAOZZ		PIPE, 1/2 IN. SCHEDULE 40, AS REQUIRED MILT20157TYPEE (81349)		FT		•	•	•	•	103	
N	PAOZZ		ELBOW: 45 DEG, 1/2 IN. 1-2IN300LB (14959)	C	EA	1	•	•	•	•	103	23
N	MDOZZ		PIPE SEAMLESS: 1/2 IN. SCHEDULE 40 MANUFACTURE FROM:	C	EA	2					103	24
N	PAOZZ		PIPE, 1/2 IN. SCHEDULE 40, AS REQUIRED MILT20157TYPEE (81349)		FT		•	•	•	•	103	
N	PAOZZ	4730-764-1661	CONNECTOR REDUCING 0108-8-6 (08752)	C	EA	2	•	•	•	•	103	25
N	PAOZZ		UNION, FEMALE, FORGED STEEL 1-2IN2000LBW06 (14595)	C	EA	8	•	•	•	•	103	26

(1) SMR CODE	(2) FEDERAL STOCK NUMBER	(3) DESCRIPTION REF NUMBER & MFR CODE	USABLE ON CODE	(4) UNIT OF MEAS	(5) QTY INC IN UNIT	(6) 15-DAY ORGANIZATIONAL MAINTENANCE ALW (a) 1-5	(b) 6-20	(c) 21-50	(d) 51-100	(7) ILLUSTRATION (a) FIG. NO.	(b) ITEM NO.
N MOOZZ		PIPE SEAMLESS: 1/2 IN. SCHEDULE 40 MANUFACTURE FROM:	C	EA	1					103	27
N PAOZZ		PIPE, 1/2 IN. SCHEDULE 40, AS REQUIRED MIL T20157 TYPE E (81349)		FT		*	*	*	*	103	
N MOOZZ		PIPE SEAMLESS: 1/2 IN. SCHEDULE 40 516-4510940-65 (80064) MANUFACTURE FROM:	C	EA	1					103	28
N PAOZZ		PIPE, 1/2 IN. SCHEDULE 40, 2 FT, 5 IN. REQUIRED MIL T20157 TYPE E (81349)		FT		*	*	*	*	103	
N MOOZZ		PIPE SEAMLESS: 1/2 IN. SCHEDULE 40 MANUFACTURE FROM:	C	EA	1					103	29
N PAOZZ		PIPE, 1/2 IN. SCHEDULE 40, AS REQUIRED MIL T20157 TYPE E (81349)		FT		*	*	*	*	103	
N MOOZZ		PIPE SEAMLESS: 1/2 IN. SCHEDULE 40 MANUFACTURE FROM:	C	EA	1					103	30
N PAOZZ		PIPE, 1/2 IN. SCHEDULE 40, AS REQUIRED MIL T20157 TYPE E (81349)		FT		*	*	*	*	103	
N MOOZZ		PIPE SEAMLESS: 1/2 IN. SCHEDULE 40 MANUFACTURE FROM:	C	EA	1					103	31
N PAOZZ		PIPE, 1/2 IN. SCHEDULE 40, AS REQUIRED MIL T20157 TYPE E (81349)		FT		*	*	*	*	103	
N MOOZZ		PIPE SEAMLESS, 1/2 IN. SCHEDULE 40 516-4510940-68 (80064) MANUFACTURE FROM:	C	EA	1					103	32
N PAOZZ		PIPE, 1/2 IN. SCHEDULE 40, 5 FT, 8 IN. REQUIRED MIL T20157 TYPE E (81349)		FT		*	*	*	*	103	
N MOOZZ		PIPE SEAMLESS: 1/2 IN. SCHEDULE 40 MANUFACTURE FROM:	C	EA	1					103	33
N PAOZZ		PIPE, 1/2 IN. SCHEDULE 40, AS REQUIRED MIL T20157 TYPE E (81349)		FT		*	*	*	*	103	
N MOOZZ		PIPE SEAMLESS: 1/2 IN. SCHEDULE 40 MANUFACTURE FROM:	C	EA	1					103	34
N PAOZZ		PIPE, 1/2 IN. SCHEDULE 40, AS REQUIRED MIL T20157 TYPE E (81349)		FT		*	*	*	*	103	
N MOOZZ		HOSE FLEXIBLE: 1/2 IN. ID 516-4510940-51 (80064) MANUFACTURE FROM:	C	EA	2					103	35
N PAOZZ	4720-067-0454	HOSE FLEXIBLE, 1/2 IN. ID, 4 FT REQUIRED FOR EACH HOSE 5F211-8 (03525)		FT		*	*	*	*	103	
N PAOZZ	4730-995-1764	ELBOW: 90 DEG, 3/8 IN. MPT X 3/4, 16 JIC 5F1025-6-8 (03525)	C	EA	2	*	*	*	*	103	36
N MOOZZ		HOSE FLEXIBLE: 3/4 IN. ID 516-4510940-85 (80064) MANUFACTURE FROM:	C	EA	1					103	37
N PAOZZ	4720-922-5136	HOSE FLEXIBLE, 3/4 IN., 5 FT, 5 IN. REQUIRED 421-12 (06752)		FT		*	*	*	*	103	

(1) SMR CODE	(2) FEDERAL STOCK NUMBER	(3) DESCRIPTION REF NUMBER & MFR CODE	USABLE ON CODE	(4) UNIT OF MEAS	(5) QTY INC IN UNIT	(6) 15-DAY ORGANIZATIONAL MAINTENANCE ALW (a) 1-5	(b) 6-20	(c) 21-50	(d) 51-100	(7) ILLUSTRATION (a) FIG. NO.	(b) ITEM NO.
N PAOZZ	4730-618-7057	ELBOW MALE 12-8CTX (08752)	C	EA	2	•	•	•	•	103	38
N PAOZZ	4730-187-7598	COUPLING: 3/4 IN. WMP521 (81348)	C	EA	4	•	•	•	•	103	39
N MOOZZ		PIPE: 3/4 IN. SCHEDULE 40 516-4510940-47 (80064) MANUFACTURE FROM:	C	EA	1					103	40
N PAOZZ		PIPE, 3/4 IN. SCHEDULE 40, 2 FT, 6 IN. REQUIRED MILT20157TYPEE (81349)		FT		•	•	•	•	103	
N PAOZZ	4730-193-7080	ELBOW: 90 DEG, 3/4 IN. WMP521 (81348)	C	EA	7	•	•	•	•	103	41
N PAOZZ	4730-196-2058	NIPPLE CLOSE: 3/4 IN. X 1 3/8 IN. LG WMN351 (81348)	C	EA	3	•	•	•	•	103	42
N PAOZZ		REDUCER: 3/4 IN. X 1/2 IN. 3-[illegible]-2IN (14959)	C	EA	6	•	•	•	•	103	43
N MOOZZ		PIPE SEAMLESS: 3/4 IN. SCHEDULE 40 516-4510940-79 (80064) MANUFACTURE FROM:	C	EA	1					103	44
N PAOZZ		PIPE, 3/4 IN. SCHEDULE 40, 6 FT, 3 IN. REQUIRED MILT20157TYPEE (81349)		FT		•	•	•	•	103	
N PAOZZ		UNION: 3/4 IN. 1983-4IN (14959)	C	EA	1	•	•	•	•	103	45
N PAOZZ	4730-945-5393	ELBOW STREET: 90 DEG, 3/4 IN. 2808 (14959)	C	EA	1	•	•	•	•	103	46
N MOOZZ		PIPE SEAMLESS: 3/4 IN. SCHEDULE 40. 516-4510940-78 (80064) MANUFACTURE FROM:	C	EA	2					103	47
N PAOZZ		PIPE, 3/4 IN. SCHEDULE 40, 3 FT, 10 IN. REQUIRED FOR EACH PIPE MILT20157TYPEE (81349)		FT		•	•	•	•	103	
N MOOZZ		PIPE SEAMLESS: 1/2 IN. SCHEDULE 40 516-4510940-76 (80064) MANUFACTURE FROM:	C	EA	1					103	48
N PAOZZ		PIPE, 1/2 IN. SCHEDULE 40, 4 FT REQUIRED MILT20157TYPEE (81349)		FT		•	•	•	•	103	
N MOOZZ		PIPE SEAMLESS: 1/2 IN. SCHEDULE 40 516-4510940-77 (80064) MANUFACTURE FROM:	C	EA	1					103	49
N PAOZZ		PIPE, 1/2 IN. SCHEDULE 40, 1 FT 10 IN. REQUIRED MILT20157TYPEE (81349)		FT		•	•	•	•	103	
N PAOZZ	4730-781-4996	CONNECTOR MALE C5205X4X8 (79470)	C	EA	1	•	•	•	•	104	1
N MOOZZ		NIPPLE LONG: 1/2 IN. X 5 IN. LG 516-4510940-29 (80064) MANUFACTURE FROM:	C	EA	4					104	2
N PAOZZ		PIPE, 1/2 IN. SCHEDULE 80, 5 IN. REQUIRED FOR EACH NIPPLE MILT20157TYPEE (81349)		FT		•	•	•	•	104	
N PAOZZ	4730-263-5266	TEE: 1/2 IN. C3709X8 (79470)	C	EA	3	•	•	•	•	104	3

(1) SMR CODE	(2) FEDERAL STOCK NUMBER	(3) DESCRIPTION REF NUMBER & MFR CODE	USABLE ON CODE	(4) UNIT OF MEAS	(5) QTY INC IN UNIT	(6) 15-DAY ORGANIZATIONAL MAINTENANCE ALW (a) 1-5	(b) 6-20	(c) 21-50	(d) 51-100	(7) ILLUSTRATION (a) FIG. NO.	(b) ITEM NO.
NHOOZZ		NIPPLE, LONG: 1/2 IN. X 6 IN. LG 516-4510940-22 (80064) MANUFACTURE FROM:	C	EA	3					104	4
NPAOZZ		PIPE, 1/2 IN. SCHEDULE 40, AS REQUIRED MILT20157TYPEE (81349)		FT		*	*	*	*	104	
NHOOZZ		PIPE SEAMLESS: 1/2 IN. SCHEDULE 40 MANUFACTURE FROM:	C	EA	2					104	5
NPAOZZ		PIPE, 1/2 IN. SCHEDULE 40, AS REQUIRED MILT20157TYPEE (81349)		FT		*	*	*	*	104	
NPAOZZ	4730-999-8582	ELBOW: 90 DEG, 1/2 IN. C350908 (79470)	C	EA	1	*	*	*	*	104	6
NPAOZZ	4730-879-5398	END HOSE: 1/2 IN. NPT PH326-8-8S (03925)	C	EA	13	*	*	*	*	104	8
NHOOZZ		HOSE FLEXIBLE: 1/2 IN. ID 516-4510940-6 (80064) MANUFACTURE FROM:	C	EA	1					104	9
NPAOZZ	4720-067-0454	HOSE FLEXIBLE, 2 IN., 1 FT 9 IN. REQUIRED SF211-8 (03925)		FT		*	*	*	*	104	
NHOOZZ		NIPPLE LONG: 1/2 IN. X 9 IN. LG 516-4510940-40 (80064) MANUFACTURE FROM:	C	EA	2					104	10
NPAOZZ		PIPE: 2 IN. SCHEDULE 40, 9 IN. REQUIRED MILT20157TYPEE (81349)		FT		*	*	*	*	104	
NPAOZZ	4730-542-5598	COUPLING C330908 (79470)	C	EA	2	*	*	*	*	104	11
NHOOZZ		HOSE FLEXIBLE: 1/2 IN. ID 516-4510940-53 (80064) MANUFACTURE FROM:	C	EA	2					104	12
NPAOZZ	4720-067-0454	HOSE FLEXIBLE, 1/2 IN. ID, 2 FT, 6 IN. REQUIRED FOR EACH HOSE SF211-8 (03925)		FT		*	*	*	*	104	
NHOOZZ		HOSE FLEXIBLE: 1/2 IN. ID 516-4510940-52 (80064) MANUFACTURE FROM:	C	EA	1					104	13
NPAOZZ	4720-067-0454	HOSE FLEXIBLE, 1/2 IN. ID, 2 FT REQUIRED SF211-8 (03925)		FT		*	*	*	*	104	
NPAOZZ	4730-764-3046	SWIVEL END HOSE J5319-8S (03925)	C	EA	13	*	*	*	*	104	14
NPAOZZ	4730-802-8876	UNION: 1/2 IN. X 1/2 IN. C530508 (88044)	C	EA	4	*	*	*	*	104	15
NHOOZZ		PIPE: SCHEDULE 40, 2 IN. 516-4510940-87 (80064) MANUFACTURE FROM:	C	EA	2						
NPAOZZ		PIPE: SCHEDULE 40, 2 IN. 1 1/2 IN. REQUIRED FOR EACH PIPE MILT20157TYPEE (81349)		FT		*	*	*	*		
NXDOZZ		HANGER PIPE 100-12 (85105)	C	EA	30						
NXDOZZ		HANGER PIPE 101-12 (85105)	C	EA	10						
NPAOZZ	4730-852-5654	ELBOW, MALE: 90 DEG, 1/2 IN. SF1094-8-8 (03925)	C	EA	6	*	*	*	*		

	(1) SMR CODE	(2) FEDERAL STOCK NUMBER	(3) DESCRIPTION REF NUMBER & MFR CODE	USABLE ON CODE	(4) UNIT OF MEAS	(5) QTY INC IN UNIT	(6) 15-DAY ORGANIZATIONAL MAINTENANCE ALW (a) 1-5	(b) 6-20	(c) 21-50	(d) 51-100	(7) ILLUSTRATION (a) FIG. NO.	(b) ITEM NO.
N	PAOZZ	4730-277-2886	ADAPTER 3F1012-6-8 (03925)	C	EA	1	*	*	*	*		
N	PAOZZ		UNION MALLEABLE IRON 1-2IN300NO (14959)	C	EA	1	*	*	*	*		
N	PAOZZ		REDUCER MALLEABLE IRON 3-8INX1-2IN300NO (14959)	C	EA	1	*	*	*	*		
N	PAOZZ	4730-288-6994	NIPPLE LONG: 2 1/2 IN. 3-4IN300LB (14959)	C	EA	6	*	*	*	*		
N	PAOZZ		ELBOW UNION: 90 DEG 890E3-4IN (14959)	C	EA	1	*	*	*	*		
N	PAOZZ	4730-922-5137	SWIVEL END HOSE 20642-12-12 (08752)	C	EA	2	*	*	*	*		
N	PAOZZ	4730-881-5539	FITTING HOSE 20142-12-12 (08752)	C	EA	2	*	*	*	*		
N	PAOZZ	4730-374-6948	FITTING HOSE: MALE PHN356-8-4 (03925)	C	EA	2	*	*	*	*		
N	PAOZZ	4730-995-8254	FITTING HOSE SWIVEL ASN816-4-4 (03925)	C	EA	2	*	*	*	*		
N	PAOZZ	4730-628-3636	ELBOW: 90 DEG, 1/4 IN. SF1025-4-4 (03925)	C	EA	2	*	*	*	*		
N	PAOZZ	4730-195-1538	BUSHING REDUCING C3109X8X4 (79470)	C	EA	1	*	*	*	*		
N	PAOZZ	4730-203-3296	NIPPLE CLOSE: 3/8 IN. X 1 IN. WAN351 (81348)	C	EA	1	*	*	*	*		
N	PAOZZ		NIPPLE LONG 1-2INX4IN (14959)	C	EA	1	*	*	*	*		
N	PAOZZ	4730-802-8876	UNION C5305X8 (88334)	C	EA	4	*	*	*	*		
N	PAOZZ	4730-853-1182	CONNECTOR, O RING C5315X8 (88334)	C	EA	4	*	*	*	*		
	PAOZZ	4830-808-2818	CONNECTOR, PIPE: PRESSURE GAGE LINE 4-4GBTXS (08752	A	EA	1	*	*	*	*		
			GROUP 62 - PUMP, STEERING									
	PAOHH	4320-115-8803	PUMP, HYDRAULIC: STEERING, LH V210-5-1C12L305 (62983) (COMPONENTS SAME AS PUMP, FSN 4320-115-8802)	A	EA	1	*	*	*	*	105	
	PAOHH	4320-115-8802	PUMP, HYDRAULIC: STEERING, RH V210-5-1C12R05 (62983)	A	EA	1	*	*	*	*	105	
N	PAOZZ	4730-540-4027	PLUG, HYDRAULIC PUMP: SCREEN 113000 (62983)	A	EA	1	*	*	*	*	105	3
	PAOZZ	2530-019-7502	SCREEN HYDRAULIC PUMP 183564 (62983)	A	EA	1	*	*	*	*	105	4
	PAOZZ	5305-276-8457	SCREW, CAP, HEXAGON HEAD: PUMP MTG 1273 (62983)		EA	4	*	*	*	*	105	19
	PAOHH	4320-115-8810	PUMP, HYDRAULIC: STEERING, RH V110-25-1C10821 (62983) (COMPONENTS SAME AS PUMP, FSN 4320-115-8811)	BC	EA	1	*	*	*	*	106	
	PAOHH	4320-115-8811	PUMP, HYDRAULIC: STEERING LH V110-25-1C10L3214 (62983)	BC	EA	1	*	*	*	*	106	

(1) SMR CODE	(2) FEDERAL STOCK NUMBER	(3) DESCRIPTION REF NUMBER & MFR CODE	USABLE ON CODE	(4) UNIT OF MEAS	(5) QTY INC IN UNIT	(6) 15-DAY ORGANIZATIONAL MAINTENANCE ALW (a) 1-5	(b) 6-20	(c) 21-50	(d) 51-100	(7) ILLUSTRATION (a) FIG. NO.	(b) ITEM NO.
R PAOZZ	5305-276-8457	SCREW, CAP, HEXAGON HEAD: PUMP MTG 1273 (62983)	BC	EA	4	*	*	*	*	106	1
PAOZZ	5305-207-2240	SCREW, CAP, HEXAGON HEAD: COVER MTG 1276A (62983)	BC	EA	8	*	*	*	*	106	2
		GROUP 63 - PUMP DRIVE, COUPLING									
PAOZZ	5306-299-2367	BOLT, MACHINE: PUMP MTG, 3/8-16 THD SIZE, 1 1/4 IN. LG MILB857TYPE2GR2 (81349)	A	EA	2	*	*	*	*	107	1
PAOZZ	5306-579-1819	BOLT, MACHINE: ADAPTER MTG, 7/16-14 THD SIZE, 1 1/4 IN. LG MILB857TYPEBCLASSC (81348)	B	EA	1	*	*	*	*	107	2
PAOZZ	5306-424-7069	BOLT, MACHINE: ADAPTER MTG, 1/2-13 THD SIZE, 1 1/4 IN. LG FEDSPECQQS633FS1035 (81348)	A	EA	4	*	*	*	*	107	3
XDOZZ		ADAPTER, PAD, DRIVE: GEAR COVER 35242 (09608)	A	EA	1					107	4
PAOZZ	5305-723-9384	SETSCREW: DRIVE GEAR, ALLEN HEAD, 1/4-20 THD SIZE, 7/16 IN. LG MS51963-66 (96906)	A	EA	1	*	*	*	*	107	5
PAOZZ	4320-235-1635	GEAR, ADAPTER: PUMP DRIVE 35243 (09608)	A	EA	1	*	*	*	*	107	6
PAOZZ	2930-672-6758	COUPLING, PUMP DRIVE: STEERING 3292492 (72582)		EA	1	*	*	*	*	107	7
PAOZZ	5306-143-2710	BOLT, MACHINE: PLATE DRIVE 5122921 (72582)	A	EA	4	*	*	*	*	107	8
PAOZZ	3020-541-1591	PLATE, INTERNAL, TEETH: PUMP DRIVE 5153449 (72582)	A	EA	1	*	*	*	*	107	9
XDOZZ		SPACER, GEAR: COUPLING DRIVE 5177026 (72582)	A	EA	1					107	10
		GROUP 64 - FILTERS, HYDRAULIC									
PAOZZ	4320-251-2138	FILTER, HYDRAULIC FLUID: STEERING RETURN LINE FB101 (02249)		EA	1	*	*	*	*	108	
PAOZZ	6685-068-2699	INDICATOR, COMPOUND: HYDRAULIC FILTER 1568 (02249)		EA	1	*	*	*	*	108	1
C PAOZZ	5310-126-5236	LOCKNUT: BY-PASS SCREW 1550 (02249)		EA	1	*	*	*	*	108	2
C PAOZZ	4820-233-7810	VALVE: BY-PASS RETAINER, LINE FILTER 1546 (02249)		EA	1	*	*	*	*	108	3
C PAOZZ	5305-456-7198	SCREW: BY-PASS SPRING 1549 (02249)		EA	1	*	*	*	*	108	4
PAOZZ	5360-236-3774	SPRING: BY-PASS VALVE 1547 (02249)		EA	1	*	*	*	*	108	5
C PAOZZ	5365-406-7793	SPACER: BY-PASS VALVE 1548 (02249)		EA	1	*	*	*	*	108	6
C PAOZZ	4320-779-2726	GUIDE: BY-PASS VALVE 1552 (02249)		EA	1	*	*	*	*	108	7
PAOZZ	3930-940-0634	FILTER, ELEMENT: 10 MICRON PAPER 1509 (02249)		EA	1	*	*	*	*	108	8
C PAOZZ	2940-977-0902	HEAD, CASTING: HYDRAULIC FILTER 1545 (02249)		EA	1	*	*	*	*	108	9

(1)	(2)	(3)	(4)	(5)	(6)				(7)	
		DESCRIPTION			15-DAY ORGANIZATIONAL MAINTENANCE ALW				ILLUSTRATION	
SMR CODE	FEDERAL STOCK NUMBER	REF NUMBER & MFR CODE / USABLE ON CODE	UNIT OF MEAS	QTY INC IN UNIT	(a) 1-5	(b) 6-20	(c) 21-50	(d) 51-100	(a) FIG. NO.	(b) ITEM NO.
PAOZZ	4820-241-4428	FILTER, SUCTION: HYDRAULIC OIL TANK, STEERING SF215 (02249) A	EA	1	*	*	*	*	109	1
XDOZZ		RING, RETAINING: SUCTION FILTER 1589 (02249) A	EA	1					109	2
PAOZZ	2590-089-4450	SPRING, CONICAL: SUCTION FILTER 1563 (02249) A	EA	1	*	*	*	*	109	3
PAOZZ	5310-843-3496	WASHER, SUCTION: FILTER, SPRING 1564 (02249) A	EA	2	*	*	*	*	109	4
C PAOZZ	5310-071-3235	WASHER, FLAT: FILTER, WASHER 1565 (02249) A	EA	2	*	*	*	*	109	5
PAOZZ	5305-152-0550	SCREW: BY-PASS VALVE, RETAINING 1578 (02249) A	EA	1	*	*	*	*	109	6
PAOZZ	5310-151-8837	LOCKNUT: BY-PASS VALVE, SCREW 1579 (02249) A	EA	1	*	*	*	*	109	7
PAOZZ	2520-891-1920	VALVE, BY-PASS 1573 (02249) A	EA	1	*	*	*	*	109	8
PAOZZ	3930-934-0501	CAP: BY-PASS VALVE, STEM 1574 (02249) A	EA	1	*	*	*	*	109	9
PAOZZ	3930-900-5161	SPRING: BY-PASS VALVE 1571 (02249) A	EA	1	*	*	*	*	109	10
PAOZZ	2590-089-4451	SPACER: BY-PASS VALVE 1569 (02249) A	EA	1	*	*	*	*	109	11
PAOZZ		GUIDE: BY-PASS VALVE 1590 (02249) A	EA	1	*	*	*	*	109	12
PAOZZ	4330-088-2056	FILTER, ELEMENT: SUCTION 1566 (02249) A	EA	1	*	*	*	*	109	13
XDOZZ		BOLT, CENTER POST: 1 1/4 IN. NPTF 1591-125 (02249) A	EA	1					109	14
		GROUP 65 - VALVES, STEERING								
C PAOZZ	5305-253-5614	SCREW, THREAD FORMING: PLATE MTG MS21318-20 (96906) BC	EA	4	*	*	*	*	110	6
C XDOZZ		PLATE, IDENTIFICATION 10-05139-03 (24785) BC	EA	1					110	7
C XDOZZ		TAG, DIRECTION 10-05139-03 (24785) BC	EA	1					110	8
C PAOZZ	5305-253-5614	SCREW, DRIVE: NO. 4 X 3/16 MS21318-20 (96906) BC	EA	4	*	*	*	*	111	11
XDOZZ		PLATE, IDENTIFICATION 10-07524-04 (24785) BC	EA	1					111	12
XDOZZ		PLATE, IDENTIFICATION 10-02632-02 (24785) BC	EA	1					111	13
C XDOZZ		SETSCREW: KNOB MTG 83-11247-03 (24785) BC	EA	1					111	14
XDOZZ		KNOB, ADJUSTING 10-04436-08 (24785) BC	EA	1					111	15
		GROUP 66 - VALVE FLOW DIVIDER								
N PAOZZ	5305-269-3218	SCREW, CAP, HEXAGON HEAD: STEERING FLOW DIVIDER MTG, 3/8-16 THD SIZE, 2 1/2 IN. LG MS90725-68 (96906) C	EA	2	*	*	*	*		
N PAOZZ	5310-732-0558	NUT, PLAIN, HEXAGON: STEERING FLOW DIVIDER MTG, 3/8-16 THD SIZE MS51967-8 (96906) C	EA	2	*	*	*	*		

(1) SMR CODE	(2) FEDERAL STOCK NUMBER	(3) DESCRIPTION REF NUMBER & MFR CODE	USABLE ON CODE	(4) UNIT OF MEAS	(5) QTY INC IN UNIT	(6) 15-DAY ORGANIZATIONAL MAINTENANCE ALW (a) 1-5	(b) 6-20	(c) 21-50	(d) 51-100	(7) ILLUSTRATION (a) FIG. NO.	(b) ITEM NO.
N PAOZZ	5310-087-7493	WASHER, FLAT: STEERING FLOW DIVIDER MTG, 3/8 IN. SCREW SIZE MS27183-13 (96906)	C	EA	2	*	*	*	*		
N PAOZZ	5310-637-9541	WASHER, LOCK: STEERING FLOW DIVIDER MTG, 3/8 IN. SCREW SIZE MS35338-46 (96906)	C	EA	2	*	*	*	*		
		GROUP 67 - CYLINDER, HYDRAULIC STEERING									
N PAOFF	2030-155-2910	CYLINDER STEERING BM2THR1177 (91940) (COMPONENTS SAME AS CYLINDER, FSN 2030-116-6664, EXCEPT WHERE INDIVIDUAL COMPONENTS ARE ANNOTATED)	BC	EA	2	*	*	*	*	113	
PAOFF	2030-116-6664	CYLINDER, HYDRAULIC STEERING BM95113 (91940)	A	EA	2	*	*	*	*	113	
PAOZZ	2030-113-9477	PIN, ASSEMBLY: CLEVIS, HYDRAULIC CYLINDER MTG A8658-12 (91940)		EA	2	*	*	*	*	113	1
PAOZZ	5305-235-2479	SCREW, CYLINDER BLEEDER A18623-1 (91940) (USED ON CYLINDER, FSN 2030-116-6664, ONLY)	A	EA	2	*	*	*	*	113	15
PAOZZ	3110-100-6161	BEARING, BALL: 3/32 IN. DIA A8622 (91940) (USED ON CYLINDER, FSN 2030-116-6664, ONLY)	A	EA	2	*	*	*	*	113	16
		GROUP 68 - TANK, HYDRAULIC									
PAOZZ	2990-897-2612	BREATHER BV200567 (99066)	B	EA	1	*	*	*	*	115	4
R PAOZZ	2990-457-0162	SCREEN, STRAINER SN200568 (99066)	B	EA	1	*	*	*	*	115	5
R PAOZZ	4730-352-9414	PLUG, PIPE: DRAIN PG7628 (99066)	B	EA	1	*	*	*	*	115	6
N PAOZZ		PLUG, DRAIN TANK 388 (26403)	C	EA	1	*	*	*	*	117	2
N PAOZZ	2030-223-3233	CAP, FILL TANK A100 (84276)	C	EA	1	*	*	*	*	117	4
N PAOZZ	5305-702-4523	SCREW, CAP, HEXAGON HEAD: INSPECTION PLATE, 1/4-20 THD SIZE, 3/4 IN. LG MS35307-306 (96906)	C	EA	38	*	*	*	*	117	5
N XDOZZ		PLATE INSPECTION 145-4510943-2 (80064)	C	EA	1					117	6
N MOOZZ		GASKET, NEOPRENE 145-4510943-10 (80064) MANUFACTURE FROM:	C	EA	1					117	7
N PCOZZ	5330-839-4909	GASKET, AS REQUIRED		YD		*	*	*	*	117	
N XDOZZ		NUT INSERT TANK 9504-08 (19738)	C	EA	38					117	8
PAOZZ	2520-225-7212	BREATHER, FILLER: HYDRAULIC RESERVOIR A100 (12190)	B	EA	2	*	*	*	*		
R PAOZZ	2990-477-6115	CAP, BREATHER A100-1 (12190)	BC	EA	2	*	*	*	*		
XDOZZ		ADAPTER A100-2 (12190)	BC	EA	2						
PAOZZ	2990-477-6116	SCREEN, BREATHER A100-3 (12190)	BC	EA	2	*	*	*	*		

(1) SMR CODE	(2) FEDERAL STOCK NUMBER	(3) DESCRIPTION REF NUMBER & MFR CODE	USABLE ON CODE	(4) UNIT OF MEAS	(5) QTY INC IN UNIT	(6) 15-DAY ORGANIZATIONAL MAINTENANCE ALW (a) 1-5	(b) 6-20	(c) 21-50	(d) 51-100	(7) ILLUSTRATION (a) FIG. NO.	(b) ITEM NO.
PCOZZ	2990-477-6117	GASKET: FILLER A100-4 (12190)	BC	EA	2	*	*	*	*		
		GROUP 69 - PIPING, HYDRAULIC RAMP HOIST									
MOOZZ		HOSE ASSEMBLY: OIL CHECK VALVE TO PUMP, 36 IN. LG MMC62-13 (98042) MANUFACTURE FROM:	A	EA	1					118	1
PCOZZ	4720-052-4959	HOSE, AS REQUIRED 1509-16 (01276)		FT		*	*	*	*	118	
PAOZZ		FITTING, 1 EA 4722-16S (01276)		EA		*	*	*	*	118	
PAOZZ	4730-682-7088	FITTING, 1 EA 4790-16S (01276)		EA		*	*	*	*	118	
MOOZZ		HOSE ASSEMBLY: OIL, PUMP TO TEE, 48 IN. LG MMC62023 (98042) MANUFACTURE FROM:	A	EA	1					118	2
PCOZZ	4720-459-2784	HOSE, AS REQUIRED D724 (30327)		FT		*	*	*	*	118	
PAOZZ		FITTING, 1 EA C824-24BM (30327)		EA		*	*	*	*	118	
PAOZZ		COUPLING, 1 EA C824-24PA (30327)		EA		*	*	*	*	118	
MOOZZ		HOSE ASSEMBLY: RELIEF VALVE OUTLET, 32 IN. LG MMC62-45 (98042) MANUFACTURE FROM:	A	EA	1					118	3
PCOZZ		HOSE, AS REQUIRED 1509-20 (01276)		FT		*	*	*	*	118	
PCOZZ	4730-547-0952	FITTING, 2 EA 4722-20-20S (01276)		EA		*	*	*	*	118	
MOOZZ		HOSE ASSEMBLY: RELIEF VALVE INLET, 36 IN. LG MMC62-46 (98042) MANUFACTURE FROM:	A	EA	1					118	4
PCOZZ		HOSE, AS REQUIRED 1509-20 (01276)		FT		*	*	*	*	118	
PAOZZ	4730-547-0952	FITTING, 2 EA 4722-20-20S (01276)		EA		*	*	*	*	118	
MOOZZ		HOSE ASSEMBLY: RAMP CONTROL VALVE, 21 IN. LG MMC62-53 (98042) MANUFACTURE FROM:	A	EA	1					118	5
PCOZZ		HOSE, AS REQUIRED 1509-20 (01276)		FT		*	*	*	*	118	
PAOZZ	4730-547-0952	FITTING, 2 EA 4722-20-20S (01276)		EA		*	*	*	*	118	
MOOZZ		HOSE ASSEMBLY: RAMP CONTROL VALVE, 24 IN. LG MMC62-54 (98042) MANUFACTURE FROM:	A	EA	1					118	6
PCOZZ		HOSE, AS REQUIRED 1509-20 (01276)		FT		*	*	*	*	118	
PAOZZ	4730-547-0952	FITTING, 2 EA 4722-20-20S (01276)		EA		*	*	*	*	118	

(1) SMR CODE	(2) FEDERAL STOCK NUMBER	(3) DESCRIPTION REF NUMBER & MFR CODE	USABLE ON CODE	(4) UNIT OF MEAS	(5) QTY INC IN UNIT	(6) 15-DAY ORGANIZATIONAL MAINTENANCE ALW (a) 1-5	(b) 6-20	(c) 21-50	(d) 51-100	(7) ILLUSTRATION (a) FIG. NO.	(b) ITEM NO.
MOOZZ		HOSE ASSEMBLY: RAMP CONTROL VALVE, 26 IN. LG MMC62-55 (98042) MANUFACTURE FROM:	A	EA	1					118	7
PCOZZ		HOSE, AS REQUIRED 1509-20 (01276)		FT		*	*	*	*	118	
PAOZZ	4730-547-0952	FITTING, 2 EA 4722-20-20S (01276)		EA		*	*	*	*	118	
MOOZZ		HOSE ASSEMBLY: RAMP CONTROL VALVE, 28 IN. LG MMC62-56 (98042) MANUFACTURE FROM:	A	EA	1					118	8
PCOZZ	4720-459-2787	HOSE, AS REQUIRED D724 (30327)		FT		*	*	*	*	118	
PAOZZ		FITTING, 2 EA C824-24MB (30327)		EA		*	*	*	*	118	
MOOZZ		HOSE, RUBBER, WIRE BRAID: WINCH RETURN LINE MANUFACTURE FROM:	A	EA	1					118	9
PCOZZ	4720-057-8612	HOSE, AS REQUIRED 2651-12 (01276)		FT		*	*	*	*	118	
MOOZZ		HOSE, RUBBER, WIRE BRAID: WINCH SUPPLY LINE MMC62-87 (98042) MANUFACTURE FROM:	A	EA	1					118	10
PCOZZ		HOSE, AS REQUIRED 1509-20 (01276)		FT		*	*	*	*	118	
PAOZZ	4730-908-6274	CLAMP, HOSE MS35842-16 (96906)	A	EA	2	*	*	*	*	118	11
MOOZZ		HOSE: TRUNK LINE, 5 1/2 IN. ID MMC62-93 (98042) MANUFACTURE FROM:	A	EA	1					118	12
PAOZZ	4720-289-6060	HOSE, AS REQUIRED ZZWA28TYPE1GRADEACLASS2 (81348)		FT		*	*	*	*	118	
XDOZZ		UNION: 90 DEG, ELBOW SWIVEL, PUMP OUTLET 6OUA16X16 (30327)	A	EA	1					118	13
XDOZZ		NIPPLE, ADAPTER: PUMP VALVE OUTLET 2083-20X16S (01276)	A	EA	1					118	14
XDOZZ		CONNECTOR, FEMALE: PUMP VALVE OUTLET 20BGTXS (08752)	A	EA	1					118	15
MOOZZ		GASKET: FLAT RING, HOSE FLANGE MMC62-32 (98042) MANUFACTURE FROM:	A	EA	1					118	22
PCOZZ	5330-291-3933	PAPER, AS REQUIRED		YD		*	*	*	*	118	
MOOZZ		GASKET: FLAT RING, HOSE FLANGE MMC62-33 (98042) MANUFACTURE FROM:	A	EA	1					118	23
PCOZZ	5330-291-3933	PAPER, AS REQUIRED		YD		*	*	*	*	118	
XDOZZ		UNION, SWIVEL: 90 DEG, ELBOW, HYDRAULIC LINE 6OUA20X20 (30327)	A	EA	1					118	24
XDOZZ		BUSHING, PIPE: CONTROL VALVE 2081-24X20S (01276)	A	EA	1					118	25
XDOZZ		CONNECTOR, FEMALE: RELIEF VALVE 24QBTXS (08752)	A	EA	1					118	26
XDOZZ		UNION: 45 DEG, SWIVEL, CONTROL VALVE 6OTG20X20 (30327)	A	EA	1					118	27

(1) SMR CODE	(2) FEDERAL STOCK NUMBER	(3) DESCRIPTION REF NUMBER & MFR CODE	USABLE ON CODE	(4) UNIT OF MEAS	(5) QTY INC IN UNIT	(6) 15-DAY ORGANIZATIONAL MAINTENANCE ALW (a) 1-5	(b) 6-20	(c) 21-50	(d) 51-100	(7) ILLUSTRATION (a) FIG. NO.	(b) ITEM NO.
XDOZZ		UNION, SWIVEL: WINCH LINE 60SG20X20 (30327)	A	EA	1					118	28
XDOZZ		UNION, SWIVEL: CONTROL VALVE 60SG24X24 (30327)	A	EA	1					118	29
XDOZZ		UNION: 90 DEG, ELBOW, MALE, FILTER INLET 28CBTX3 (08752)	A	EA	1					118	30
XDOZZ		UNION: 90 DEG, ELBOW, FILTER INLET 28EBTX5 (08752)	A	EA	1					118	31
XDOZZ		FITTING, HOSE: WINCH LINE 4722-20-208 (01276)	A	EA	1					118	36
XDOZZ		UNION, SWIVEL: WINCH LINE 60SA20X20 (30327)	A	EA	1					118	37
XDOZZ		FITTING, HOSE: WINCH LINE 4412-12-128 (01276)	A	EA	1					118	39
PAOZZ	4730-802-2815	CONNECTOR, FEMALE: PRESSURE GAGE PANEL 4-408TX5 (08752)	A	EA	1	*	*	*	*	118	41
PAOZZ	6685-087-6925	GAGE, PRESSURE: 2 1/2 IN., 0-3000 PSI TYPE5PATDMF (38508)	A	EA	1	*	*	*	*	118	45
XDOZZ		UNION, ELBOW SWIVEL: WINCH TO LINE 60UA08X12 (30327)	C	EA	1					118	50
MOOZZ		GASKET: 1/8 IN. THK, TRUNK LINE MMC62-95 (98042) MANUFACTURE FROM:	A	EA	1					118	
PCOZZ	5330-261-5761	RUBBER, AS REQUIRED		FT		*	*	*	*	118	
MOOZZ		HOSE ASSEMBLY: WINCH HOSE 72-6-229 (26571) MANUFACTURE FROM:	B	EA	1					119	1
PCOZZ	4720-252-5431	HOSE, AS REQUIRED 216R20 (03925)		FT		*	*	*	*	119	
PAOZZ		COUPLING, 1 EA PHN20 (03925)		EA		*	*	*	*	119	
PAOZZ		COUPLING, 1 EA 390A20 (03925)		EA		*	*	*	*	119	
MOOZZ		HOSE ASSEMBLY: WINCH HOSE 72-7-229 (26571) MANUFACTURE FROM:	B	EA	1					119	2
PCOZZ	4720-252-5431	HOSE, AS REQUIRED 216R20 (03925)		FT		*	*	*	*	119	
PAOZZ		COUPLING, 1 EA PHN20 (03925)		EA		*	*	*	*	119	
PAOZZ		COUPLING, 1 EA 345A20 (03925)		EA		*	*	*	*	119	
MOOZZ		HOSE ASSEMBLY: HAND PUMP 72-24-229 (26571) MANUFACTURE FROM:	B	EA	1					119	3
PCOZZ		HOSE, AS REQUIRED 225R5 (03925)		FT		*	*	*	*	119	
PCOZZ		COUPLING, 1 EA PHN (03925)		EA		*	*	*	*	119	
MOOZZ		HOSE ASSEMBLY: WINCH VALVE 72A26-229 (26571) MANUFACTURE FROM:	B	EA	1					119	4
PCOZZ		HOSE, AS REQUIRED 225R5 (03925)		FT		*	*	*	*	119	

(1) SMR CODE	(2) FEDERAL STOCK NUMBER	(3) DESCRIPTION REF NUMBER & MFR CODE	USABLE ON CODE	(4) UNIT OF MEAS	(5) QTY INC IN UNIT	(6) 15-DAY ORGANIZATIONAL MAINTENANCE ALW (a) 1-5	(b) 6-20	(c) 21-50	(d) 51-100	(7) ILLUSTRATION (a) FIG. NO.	(b) ITEM NO.
PAOZZ		COUPLING, 1 EA PMH (03925)		EA		*	*	*	*	119	
MOOZZ		HOSE ASSEMBLY: WINCH VALVE 72A27-229 (26571) MANUFACTURE FROM:	B	EA	1					119	5
PCOZZ		HOSE, AS REQUIRED 225R5 (03925)		FT		*	*	*	*	119	
PAOZZ		COUPLING, 1 EA PMH (03925)		EA		*	*	*	*	119	
MOOZZ		HOSE ASSEMBLY: PUMP TO TANK 72A33-229 (26571) MANUFACTURE FROM:	B	EA	1					119	6
PCOZZ		HOSE, AS REQUIRED 221R32 (03925)		EA		*	*	*	*	119	
PAOZZ		COUPLING, 1 EA PM32 (03925)		EA		*	*	*	*	119	
PAOZZ		COUPLING, 1 EA AS32 (03925)		EA		*	*	*	*	119	
MOOZZ		HOSE ASSEMBLY: PUMP TO TANK 72A34-229 (26571) MANUFACTURE FROM:	B	EA	1					119	7
PCOZZ		HOSE, AS REQUIRED 221R32 (03925)		FT		*	*	*	*	119	
PAOZZ		COUPLING, 1 EA PM32 (03925)		EA		*	*	*	*	119	
PAOZZ		COUPLING, 1 EA AS32 (03925)		EA		*	*	*	*	119	
MOOZZ		HOSE, ASSEMBLY: PUMP TO CROSS LINE 72A41-229 (26571) MANUFACTURE FROM:	B	EA	1					119	8
PCOZZ	4720-252-5431	HOSE, AS REQUIRED 216R20 (03925)		FT		*	*	*	*	119	
PAOZZ		COUPLING, 1 EA PMN20 (03925)		EA		*	*	*	*	119	
MOOZZ		HOSE ASSEMBLY: PUMP TO CROSS LINE 72A42-229 (26571) MANUFACTURE FROM:	B	EA	1					119	9
PCOZZ		HOSE, AS REQUIRED 216R20 (03925)		FT		*	*	*	*	119	
PAOZZ		COUPLING, 1 EA PMN20 (03925)		EA		*	*	*	*	119	
MOOZZ		HOSE ASSEMBLY: CONTROL VALVE LINE 72851-229 (26571) MANUFACTURE FROM:	B	EA	1					119	10
PCOZZ	4720-252-5431	HOSE, AS REQUIRED 216R20 (03925)		FT		*	*	*	*	119	
PAOZZ		COUPLING, 1 EA PMN20 (03925)		EA		*	*	*	*	119	
PAOZZ		ADAPTER, 1 EA 16M20WFS (08752)		EA		*	*	*	*	119	
XDOZZ		ADAPTER, SWIVEL: WINCH CONNECTOR, 1/4 IN. 1037-4-4 (03925)	B	EA	1					119	13
XDOZZ		ADAPTER: PUMP HOSE, NO. 32 1013-32-32 (03925)	B	EA	1					119	18
H PAOZZ		U BOLT: 1 1/4 IN. 137-1-1-44N (26493)	C	EA	10	*	*	*	*	120	1

	(1) SMR CODE	(2) FEDERAL STOCK NUMBER	(3) DESCRIPTION REF NUMBER & MFR CODE	USABLE ON CODE	(4) UNIT OF MEAS	(5) QTY INC IN UNIT	(6) 15-DAY ORGANIZATIONAL MAINTENANCE ALW (a) 1-5	(b) 6-20	(c) 21-50	(d) 51-100	(7) ILLUSTRATION (a) FIG. NO.	(b) ITEM NO.
N	MOOZZ		HOSE ASSEMBLY: PUMP 211R32PM32A532-216 (03925) MANUFACTURE FROM:	C	EA	2					120	22
N	PAOZZ		HOSE, 2 IN., AS REQUIRED 211R32 (03925)		FT		*	*	*	*	120	
N	PAOZZ		FITTING, 1 REQUIRED PM32 (03925)		EA		*	*	*	*	120	
N	PAOZZ		FITTING, 1 REQUIRED A532 (03925)		EA		*	*	*	*	120	
N	XDOZZ		ADAPTER 1013-32-32 (03925)	C	EA	2					120	23
N	MOOZZ		HOSE ASSEMBLY: CONTROL VALVE 272R20PM20PM20-36 (03925) MANUFACTURE FROM:	C	EA	1					120	29
N	PAOZZ		HOSE, 1 1/4 IN., AS REQUIRED 272R20 (03925)		FT		*	*	*	*	120	
N	XDOZZ		FITTING, 2 REQUIRED PM20 (03925)		EA						120	
N	MOOZZ		HOSE ASSEMBLY: PUMP DISC 272R20PM20PM20-30 (03925) MANUFACTURE FROM:	C	EA	2					120	35
N	PAOZZ		HOSE, FLEXIBLE, 1 1/4 IN., AS REQUIRED 272R20 (03925)		FT		*	*	*	*	120	
N	PAOZZ		FITTING, 2 REQUIRED PM20 (03925)		EA		*	*	*	*	120	
N	MOOZZ		HOSE ASSEMBLY: CONTROL VALVE 272R20PM20PM20-36 (03925) MANUFACTURE FROM:	C	EA	2					121	1
N	PCOZZ		HOSE, 1 1/4 IN., AS REQUIRED 272R20 (03925)		FT		*	*	*	*	121	
N	PAOZZ		FITTING, 2 REQUIRED FOR EA HOSE PM20 (03925)		EA		*	*	*	*	121	
N	MOOZZ		HOSE ASSEMBLY: WINCH 272R20PM20SA45A25 (03925) MANUFACTURE FROM:	C	EA	1					122	1
N	PCOZZ		HOSE, 1 1/4 IN., AS REQUIRED 272R20 (03925)		FT		*	*	*	*	122	
N	PAOZZ		FITTING, HOSE, 1 REQUIRED PM20 (03925)		EA		*	*	*	*	122	
N	PAOZZ		FITTING, HOSE, 1 REQUIRED SA45A (03925)		EA		*	*	*	*	122	
N	MOOZZ		HOSE ASSEMBLY 272R20PM20SA20-20 (03925) MANUFACTURE FROM:	C	EA	1					122	13
N	PCOZZ		HOSE, 1 1/4 IN., AS REQUIRED 272R20 (03925)		FT		*	*	*	*	122	
N	PAOZZ		FITTING, HOSE, 1 REQUIRED PM20 (03925)		EA		*	*	*	*	122	
N	PAOZZ		FITTING, HOSE, 1 REQUIRED SA20 (03925)		EA		*	*	*	*	122	
N	MOOZZ		HOSE ASSEMBLY 272R20PM20SA20-133-1/4 (03925) MANUFACTURE FROM:	C	EA	1					122	22
N	PCOZZ		HOSE, 1 1/4 IN., AS REQUIRED 272R20 (03925)		FT		*	*	*	*	122	
N	PAOZZ		FITTING, HOSE, 1 REQUIRED PM20 (03925)		EA		*	*	*	*	122	

(1) SMR CODE	(2) FEDERAL STOCK NUMBER	(3) DESCRIPTION REF NUMBER & MFR CODE	USABLE ON CODE	(4) UNIT OF MEAS	(5) QTY INC IN UNIT	(6) 15-DAY ORGANIZATIONAL MAINTENANCE ALW (a) 1-5	(b) 6-20	(c) 21-30	(d) 31-100	(7) ILLUSTRATION (a) FIG. NO.	(b) ITEM NO.
N PAOZZ		FITTING, HOSE, 1 REQUIRED SA20 (03925)		EA		*	*	*	*	122	
N MOOZZ		HOSE ASSEMBLY: HAND PUMP 242A6J36PM6-28 (03925) MANUFACTURE FROM:	C	EA	1					123	1
PCOZZ		HOSE, FLEXIBLE: 3/8 IN., AS REQUIRED 242R6 (03925)		FT		*	*	*	*	123	
PAOZZ		FITTING, HOSE, 1 REQUIRED J36 (03925)		EA		*	*	*	*	123	
PAOZZ		FITTING, HOSE, 1 REQUIRED PM6 (03925)		EA		*	*	*	*	123	
N PAOZZ	4820-248-3701	VALVE, BALL 1-244485E (98991)	C	EA	1	*	*	*	*	123	2
N XDOZZ		NIPPLE, HEXAGON: 3/8 X 1/2 IN. C3069X8X6 (79470)	C	EA	1					123	5
N MOOZZ		HOSE ASSEMBLY: HAND PUMP 242R6J36PM6-28 (03925) MANUFACTURE FROM:	C	EA	1					123	7
PCOZZ		HOSE, FLEXIBLE, 3/8 IN., AS REQUIRED 242R6 (03925)		FT		*	*	*	*	123	
PAOZZ		FITTING, HOSE, 1 REQUIRED J36 (03925)		EA		*	*	*	*	123	
PAOZZ		FITTING, HOSE, 1 REQUIRED PM6 (03925)		EA		*	*	*	*	123	
N XDOZZ		ELBOW: HOSE TO VALVE 516-4510941-151 (80064)	C	EA	1					123	8
N XDOZZ		NIPPLE, HEXAGON: 3/8 X 1/2 IN. C3069X8X6 (79470)		EA	1					123	9
N MOOZZ		HOSE ASSEMBLY 225P6PM6PM6-24 (03925) MANUFACTURE FROM:	C	EA	1					123	10
PAOZZ		HOSE, FLEXIBLE, AS REQUIRED 225P6 (03925)		FT		*	*	*	*	123	
PAOZZ		FITTING, 2 REQUIRED PM6 (03925)		EA		*	*	*	*	123	
N MOOZZ		HOSE ASSEMBLY: RAMP WINCH 242R6J36PM6-28 (03925) MANUFACTURE FROM:	C	EA	1					123	11
N PCOZZ		HOSE, FLEXIBLE, 3/8 IN., AS REQUIRED 242R6 (03925)		FT		*	*	*	*	123	
N PAOZZ		FITTING, HOSE, 1 REQUIRED J36 (03925)		EA		*	*	*	*	123	
N PAOZZ		FITTING, HOSE, 1 REQUIRED PM6 (03925)		EA		*	*	*	*	123	
N MOOZZ		HOSE ASSEMBLY: WINCH 225P6PM6PM6-24 (03925) MANUFACTURE FROM:	C	EA	1					123	23
N PAOZZ		HOSE, FLEXIBLE, AS REQUIRED 225P6 (03925)		FT		*	*	*	*	123	
N PAOZZ		FITTING, 2 REQUIRED PM6 (03925)		EA		*	*	*	*	123	
N MOOZZ		HOSE ASSEMBLY 225R8PM8PM6-10 (03925) MANUFACTURE FROM:	C	EA	1					123	24
N PAOZZ		HOSE, 1/2 IN. ID, AS REQUIRED 225R8 (03925)		FT		*	*	*	*	123	
N PAOZZ		FITTING, 1 REQUIRED PM8 (03925)		EA		*	*	*	*	123	

	(1) SMR CODE	(2) FEDERAL STOCK NUMBER	(3) DESCRIPTION REF NUMBER & MFR CODE	USABLE ON CODE	(4) UNIT OF MEAS	(5) QTY INC IN UNIT	(6) 15-DAY ORGANIZATIONAL MAINTENANCE ALW (a) 1-5	(b) 6-20	(c) 21-50	(d) 51-100	(7) ILLUSTRATION (a) FIG. NO.	(b) ITEM NO.
N	XDOZZ		TEE, PIPE: 1/2 IN. 516-4510941-17 (80064)	C	EA	1					123	27
N	MOOZZ		HOSE ASSEMBLY: WINCH 272R20PM20-5990R20-42 (03925) MANUFACTURE FROM:	C	EA	1						
	PCOZZ		HOSE, 1 1/4 IN., AS REQUIRED 272R20 (03925)		FT		•	•	•	•		
	PAOZZ		FITTING, HOSE, 1 REQUIRED PM420 (03925)		EA		•	•	•	•		
	PAOZZ		FITTING, HOSE, 1 REQUIRED SA20 (03950)		EA		•	•	•	•		
N	XDOZZ		CONNECTOR, MALE: HOSE LATCH CYLINDER C5205X6X6 (88334)	C	EA	2						
			GROUP 70 - PUMP, HYDRAULIC, RAMP									
	PAOHH	4320-115-8808	PUMP, HYDRAULIC: RAMP, RH 25V17A1C10-002 (62983) (COMPONENTS SAME AS PUMP, FSN 4320-115-8807)	A	EA	1	•	•	•	•	124	
	PAOHH	4320-115-8807	PUMP, HYDRAULIC: RAMP, LH, COUNTERCLOCKWISE 25V17A1C10L002 (62983)	A	EA	1	•	•	•	•	124	
	PAOZZ	6610-166-7043	SCREW, SELF-LOCK: PUMP MOUNT 199740 (62983)	A	EA	4	•	•	•	•	124	1
	XDOZZ		BRACKET: PUMP MOUNT 199740 (62983)	A	EA	2					124	2
	PAOHH	4320-115-8806	PUMP, HYDRAULIC: RAMP 35V25A1C10L002 (62983) (COMPONENTS SAME AS PUMP, FSN 4320-115-8805)	BC	EA	1	•	•	•	•	125	
	PAOHH	4320-115-8805	PUMP, HYDRAULIC: RAMP 35V25A1C10-002 (62983)	BC	EA	1	•	•	•	•	125	
C	PAOZZ	5305-451-3487	SCREW, CAP, HEXAGON HEAD: BODY TO BRACKET 205533 (62983)	BC	EA	4	•	•	•	•	125	1
	XDOZZ		BRACKET MOUNTING 205077 (62983)	BC	EA	2					125	2
	PAOZZ		PARAFLEX, COUPLING PX100HF (71956)	BC	EA	2	•	•	•	•		
	PAOZZ	4320-462-2160	BUSHING, PUMP COUPLING 2517-1-1-4 (24617)	BC	EA	2	•	•	•	•		
	PAOZZ	4320-462-2156	BUSHING, PUMP, COUPLING 2517-1-3-4 (71956)	BC	EA	2	•	•	•	•		
	PAOZZ		COUPLING, HYDRAULIC PUMP 6020TYPEHF1-3-4X7-8 (71956)	A	EA	2	•	•	•	•		
N	PAOZZ	5305-051-0027	SCREW, CAP, HEXAGON HEAD: RAMP HYDRAULIC PUMP MTG, 3/8-16 THD SIZE, 2 IN. LG MS90725-164 (96906)		EA	8	•	•	•	•		
N	PAOZZ	4320-462-2158	BUSHING: WINCH HYDRAULIC PUMP DRIVE COUPLING 2517-11-4 (24617)	C	EA	2	•	•	•	•		
N	PAOZZ	3010-487-0857	COUPLING PARAFLEX: WINCH HYDRAULIC PUMP DRIVE COUPLING PX110 (71956)	C	EA	2	•	•	•	•		
N	PAOZZ	4320-462-2160	BUSHING: WINCH HYDRAULIC PUMP DRIVE COUPLING 2517-11-4 (24617)	C	EA	2	•	•	•	•		

(1) SMR CODE	(2) FEDERAL STOCK NUMBER	(3) DESCRIPTION REF NUMBER & MFR CODE	USABLE ON CODE	(4) UNIT OF MEAS	(5) QTY INC IN UNIT	(6) 15-DAY ORGANIZATIONAL MAINTENANCE ALW (a) 1-5	(b) 6-20	(c) 21-50	(d) 51-100	(7) ILLUSTRATION (a) FIG. NO.	(b) ITEM NO.
H MOOZZ		KEY, MACHINE: WINCH HYDRAULIC PUMP DRIVE COUPLING 145-4510923P16 (80064) MANUFACTURE FROM:	C	EA	2						
H PAOZZ	9510-596-6289	ROD, SQUARE: 5/16 IN. STEEL, AS REQUIRED QQTS0GRADECCLASSW1-10BAR (81348)		FT		•	•	•	•		
H PAOZZ	5310-763-8920	NUT, PLAIN, HEXAGON: RAMP HYDRAULIC PUMP MTG, 5/8-11 THD SIZE MS51967-20 (96906)	C	EA	8	•	•	•	•		
H PAOZZ	5310-820-6653	WASHER, LOCK: RAMP HYDRAULIC PUMP MTG, 5/8 IN. SCREW SIZE MS35338-50 (96906)	C	EA	8	•	•	•	•		
		GROUP 71 - WINCH, RAMP HOIST, MARCO									
XDOZZ		PLUG, PIPE: HOUSING, 1/2-14 THD SIZE	A	EA	1					127	1
XDOZZ		PLUG, PIPE: HOUSING DRAIN, 3/4-14 THD SIZE	A	EA	1					127	2
XDOZZ		PLUG, PIPE: HOUSING, 1 1/4 THD SIZE	A	EA	1					127	3
XDOZZ		FITTING, LUBRICATION: BEARING, 1/8-27 THD SIZE 1630 (70278)	A	EA	1					128	11
		GROUP 72 - WINCH RAMP HOIST, GEARMATIC									
PAOZZ	4730-879-8370	PLUG, PIPE: PORT END COVER F56 (36581)	BC	EA	2	•	•	•	•		
		GROUP 73 - VALVE, RAMP CONTROL									
PAOHH	2030-110-3447	VALVE, RAMP: CONTROL CM6N02R20BL30 (62983)	A	EA	1	•	•	•	•		
PAOHH	2030-113-9457	VALVE, RAMP: CONTROL CM6N02R20BL30 (62983)	BC	EA	1	•	•	•	•	139	
H MOOZZ		CHAIN, SINGLE, JACK: CONTROL LEVER PIN RETAINER 145-4510923-86 (80064) MANUFACTURE FROM:	C	EA	1					139	28
H PAOZZ	4010-228-9963	CHAIN, SINGLE, JACK: NO. 10, AS REQUIRED RRC27ICLASS7 (81348)		FT		•	•	•	•	139	
H PAOZZ	5315-982-1348	PIN, SHEAR DETENT: RAMP VALVE CONTROL LEVER PIN MDAAUDELBLDC17OCRES (90173)	C	EA	1	•	•	•	•	139	29
H PAOZZ	5315-842-3044	PIN, COTTER: RAMP CONTROL LEVER PINS, 3/32 IN. DIA, 3/4 IN. LG MS24665-283 (96906)	C	EA	1	•	•	•	•	139	30
H PAOZZ	5310-880-2977	WASHER: RAMP CONTROL LEVER, 5/16 IN. SCREW SIZE MS15795-811 (96906)	C	EA	8	•	•	•	•	139	31
H PAOZZ	5315-982-1869	PIN, CLEVIS: RAMP CONTROL LEVER, 5/16 IN. DIA, 2 IN. LG 5-161MK21MLGHD (75301)	C	EA	1	•	•	•	•	139	32
H MHOZZ		BAR ROUND: RAMP CONTROL VALVE HANDLE 145-4510923-51 (80064)	C	EA	1					139	33

	(1) SMR CODE	(2) FEDERAL STOCK NUMBER	(3) DESCRIPTION REF NUMBER & MFR CODE	USABLE ON CODE	(4) UNIT OF MEAS	(5) QTY INC IN UNIT	(6) 15-DAY ORGANIZATIONAL MAINTENANCE ALW (a) 1-5	(b) 6-20	(c) 21-30	(d) 51-100	(7) ILLUSTRATION (a) FIG. NO.	(b) ITEM NO.
N	PAOZZ	5315-842-3044	PIN, COTTER: RAMP CONTROL LEVER PIN, 3/32 IN. DIA, 3/4 IN. LG MS24665-283 (96906)	C	EA	1	•	•	•	•	139	34
N	PAOZZ		PIN, CLEVIS: RAMP CONTROL LEVER, 5/16 IN. DIA, 1 1/8 IN. LG 5-161HX11-81NLG (75301)	C	EA	2	•	•	•	•	139	35
N	MMOZZ		BAR ROUND: RAMP CONTROL LEVER TO PILOT LEVER 145-4510923-64 (80064)	C	EA	1					139	36
N	PAOZZ	5315-059-0491	PIN, COTTER: RAMP CONTROL LEVER, 1/8 IN. DIA, 1 1/4 IN. LG MS24665-372 (96906)	C	EA	1	•	•	•	•	139	37
N	PAOZZ	5310-886-3069	WASHER: RAMP CONTROL LEVER PIN 9908851-2 (18876)	C	EA	1	•	•	•	•	139	38
N	PAOZZ		PIN, CLEVIS: RAMP CONTROL VALVE, 5/8 IN. DIA, 1 5/8 IN. LG 5-81HX15-81NLG (75301)	C	EA	1	•	•	•	•	139	39
N	MMOZZ		BAR, ROUND: RAMP CONTROL VALVE LEVER 145-4510923-65 (80064)	C	EA	1					139	40
N	PAOZZ	5975-642-7265	NUT, LOCK: RAMP CONTROL ROD, CONNECTOR, 1 1/4 IN. WF408 (81348)	C	EA	1	•	•	•	•	139	41
N	PAOZZ	5330-861-0526	SEALING, O RING: RAMP CONTROL ROD, CONNECTOR, 1 1/4 IN. 5265 (59730)	C	EA	1	•	•	•	•	139	42
N	MMOZZ		BAR, FLAT: RAMP CONTROL LEVER 145-4510923-52 (80064)	C	EA	2						
N	PAOZZ	5306-227-0872	BOLT, MACHINE: RAMP CONTROL LEVER, 5/16-18 THD SIZE, 2 IN. LG MOREF (33333)	C	EA	1	•	•	•	•		
N			GROUP 74 - FILTER STRAINERS									
	PBOOO	4330-004-0748	FILTER HYDRAULIC: RAMP HOIST AFB401-2 (02249) (COMPONENTS SAME AS FILTER, FSN 4330-454-8112, EXCEPT WHERE INDIVIDUAL COMPONENTS ARE ANNOTATED)	C	EA	1	•	•	•	•	140	
	PBOOO	4320-462-2157	FILTER, HYDRAULIC: RAMP HOIST RETURN LINE AFB403-2 (02249) (COMPONENTS SAME AS FILTER, FSN 4330-454-8112, EXCEPT WHERE INDIVIDUAL COMPONENTS ARE ANNOTATED)	B	EA	1	•	•	•	•	140	
	PBOOO	4330-454-8112	FILTER, HYDRAULIC: RAMP HOIST RETURN LINE, 1 1/2 IN. NPT AFB401 (02249)	A	EA	1	•	•	•	•	140	
	PAOZZ	4730-879-8363	PLUG, PIPE: FILTER HEAD, 1/8-27 THD SIZE 015 (02249)		EA	2	•	•	•	•	140	1
	PAOZZ	668_-068-2699	INDICATOR, FILTER 1568 (02249)		EA	2	•	•	•	•	140	2
C	PAOZZ	5310-151-8837	NUT, LOCK: BY-PASS VALVE RETAINER 1579 (02249)		EA	2	•	•	•	•	140	3
	PAOZZ	2520-891-1520	VALVE: BY-PASS FILTER 1573 (02249)		EA	2	•	•	•	•	140	4
	PAOZZ	2590-089-4449	GUIDE: BY-PASS VALVE 1572 (02249)		E	2	•	•	•	•	140	5

(1)	(2)	(3)	(4)	(5)	(6)				(7)	
SMR CODE	FEDERAL STOCK NUMBER	DESCRIPTION REF NUMBER & MFR CODE	USABLE ON CODE	UNIT OF MEAS	QTY INC IN UNIT	15-DAY ORGANIZATIONAL MAINTENANCE ALW (a) 1-5	(b) 6-20	(c) 21-50	(d) 51-100	ILLUSTRATION (a) FIG. NO.	(b) ITEM NO.
PAOZZ	2590-089-4451	SPACER: BY-PASS VALVE FILTER 1569 (02249)		EA	1	•	•	•	•	140	6
PAOZZ	5360-443-6116	SPRING: BY-PASS FILTER 1570 (02249)		EA	2	•	•	•	•	140	7
C PAOZZ	3930-934-0501	CAP: BY-PASS SPRING STEM 1574 (02249)		EA	2	•	•	•	•	140	8
C PAOZZ	5305-152-0550	SCREW, SELF-LOCK: BY-PASS VALVE 1576 (02249)		EA	1	•	•	•	•	140	9
PCOZZ	5330-920-8463	PACKING, PREFORMED: HOUSING SEAL 1576 (02249)		EA	2	•	•	•	•	140	10
PCOZZ	5310-843-3496	WASHER, FILTER, BASE: 1 1/4 IN. OD 1564 (02249)	AB	EA	4	•	•	•	•	140	11
N PCOZZ	5330-762-6018	SEAL RUBBER: BASE 3274 (02249)	C	EA	4	•	•	•	•	140	11
N PAOZZ	5310-151-8839	WASHER, BACKUP 3277 (02249)	C	EA	2	•	•	•	•	140	12
PAOZZ	5310-071-3235	WASHER, FLAT: FILTER WASHER 1565 (02249)	AB	EA	4	•	•	•	•	140	12
PAOZZ	3930-136-5066	FILTER, ELEMENT: 10 MICRON, PAPER 3293 (02249)		EA	2	•	•	•	•	140	13
PAOZZ	2590-089-4435	SPRING, FILTER: SEAT 1563 (02249)		EA	2	•	•	•	•	140	14
XDOZZ		HOUSING, FILTER HEAD 1557 (02249)		EA	2					140	15
H PCOZZ	5310-071-3234	WASHER, FLAT: CENTER POST, HOUSING SEAL 1575 (02249)		EA	2	•	•	•	•	140	16
XDOZZ		POST, CENTER 1599 (02249)	BC	EA	2					140	17
XDOZZ		POST, CENTER: FILTER, HYDRAULIC 1561 (02249)	A	EA	2					140	17
XDOZZ		HEAD, FILTER: HYDRAULIC 1587 (02249)		EA	1					140	18
PAOZZ	4730-457-8343	STRAINER, SUCTION LINE: RAMP HOIST MF75 (05160)	A	EA	1	•	•	•	•	141	
XAOZZ		HOUSING, STRAINER 201132 (05160)	A	EA	1					141	1
PAOZZ	4320-454-7875	INDICATOR, VACUUM MF360 (05160)	A	EA	1	•	•	•	•	141	2
PCOZZ	4730-088-4550	SEAL, SET, STRAINER 200882 (05160)	A	EA	1	•	•	•	•	141	3
PAOZZ	4330-456-1372	ELEMENT, 140 MICRON 201164 (05160)	A	EA	1	•	•	•	•	141	4
PCOZZ	4730-097-9771	SEAL, BODY: STRAINER 201177 (05160)	A	EA	1	•	•	•	•	141	5
XAOZZ		COVER, STRAINER 200879 (05160)	A	EA	1					141	6
XDOZZ		SPRING, STRAINER ELEMENT 200885 (05160)	A	EA	1					141	7
XAOZZ		ELEMENT, CENTER 200174 (05160)	A	EA	1					141	8
XDOZZ		BOLT, STRAINER COVER 900730 (05160)	A	EA	2					141	
C PBOZZ	4330-489-0311	STRAINER, TANK: RAMP HOIST J75-600-100-21-2NPTF (84276)	BC	EA	2	•	•	•	•		

(1)	(2)	(3)	(4)	(5)	(6)				(7)	
		DESCRIPTION			15-DAY ORGANIZATIONAL MAINTENANCE ALLOWANCE				ILLUSTRATION	
SMR CODE	FEDERAL STOCK NUMBER	REF NUMBER & MFR CODE	USABLE ON CODE	UNIT OF MEAS	QTY INC IN UNIT	(a) 1-5	(b) 6-20	(c) 21-50	(d) 51-100	(a) FIG. NO.	(b) ITEM NO.
		GROUP 75 - RELIEF VALVE									
PAOHH	4820-607-1705	VALVE, RELIEF: RAMP HOIST CT10F10 (62983)	A	EA	1	•	•	•	•		
		GROUP 76 - CHECK VALVE									
C PAOZZ	4820-462-7797	VALVE, CHECK: HYDRAULIC RAMP D4-185 (24785)	BC	EA	2	•	•	•	•		
C PAOZZ	4820-462-7501	VALVE, CHECK: RAMP HOIST BC1000 (91561)	A	EA	2	•	•	•	•		
C PAOZZ	4820-439-6044	VALVE, BALL: RAMP HOIST 11M[illegible]YBBE (98991)	BC	EA	2	•	•	•	•		
		GROUP 77 - COUNTERBALANCE VALVE									
PAOHH	4820-462-7792	VALVE, COUNTERBALANCE: RAMP HOIST WINCH SA2-185D (24785) (COMPONENTS SAME AS VALVE, FSN 4820-456-1145, EXCEPT WHERE INDIVIDUAL COMPONENTS ARE ANNOTATED)	BC	EA	1	•	•	•	•		
PAOHH	4820-456-1145	VALVE, COUNTERBALANCE: RAMP HOIST WINCH SA2-185B[illegible] (24785)	A	EA	1	•	•	•	•		
		GROUP 78 - HAND PUMP, HYDRAULIC									
PAOHH	4320-115-8804	PUMP, HAND: HYDRAULIC RAMP 160-6 (47296)	B	EA	1	•	•	•	•	145	
XDOZZ		LEVER, HAND PUMP 1000-1-0 (47296)	B	EA	1					145	2
XDOZZ		HANDLE, PUMP 1000-2-0 (47296)	B	EA	1					145	3
PAOZZ	5340-888-8146	HAND GRIP: RUBBER GU1-50-6 (47296)	B	EA	1	•	•	•	•	145	4
XDOZZ		LINK, PUMP 1000-153 (47296)	B	EA	1					145	5
N PAOHH	4320-250-9586	PUMP, HAND, W/TANK 160-8 (47296)	C	EA	1	•	•	•	•	146	
N PAOZZ	5340-888-8146	HAND GRIP, RUBBER GU1-50-6 (47296)	C	EA	1	•	•	•	•	146	1
N PAOZZ	4320-805-0159	HANDLE 1000-2-0 (47296)	C	EA	1	•	•	•	•	146	2
N PAOZZ	1730-871-7822	PLUG, FILL FP7 (47296)	C	EA	1	•	•	•	•	146	5
N PAOZZ	4320-621-5248	SCREW, RELEASE 1000-5-0 (47296)	C	EA	1	•	•	•	•	146	8
N PAOZZ	5330-620-9336	WASHER, SEAL 1000-6-0 (47296)	C	EA	2	•	•	•	•	146	11
		GROUP 79 - TANK, HYDRAULIC OIL WINCH									
XDOZZ		CAP, FILL AND VENT: HYDRAULIC OIL TANK H0117 (09608)	A	EA	2					147	2
XDOZZ		GAGE, SIGHT: HYDRAULIC OIL TANK H0144 (09608)	A	EA	2					147	3

(1) SMR CODE	(2) FEDERAL STOCK NUMBER	(3) DESCRIPTION REF NUMBER & MFR CODE	USABLE ON CODE	(4) UNIT OF MEAS	(5) QTY INC IN UNIT	(6) 15-DAY ORGANIZATIONAL MAINTENANCE ALW (a) 1-5	(b) 6-20	(c) 21-50	(d) 51-100	(7) ILLUSTRATION (a) FIG. NO.	(b) ITEM NO.
		GROUP 80 - CYLINDERS, HYDRAULIC RAMP LATCH									
N PAOZZ	5310-734-1739	NUT, HEXAGON: U-BOLT, 1-12 THD SIZE MS51972-10 (96906)	C	EA	8	•	•	•	•	148	1
N PAOZZ	4730-172-0040	FITTING, LUBRICATION: RAMP LATCH MS15003-1 (96906)	C	EA	2	•	•	•	•	148	3
N PAOZZ	5315-832-1840	PIN, CYLINDER CLEVIS 8658-11 (91940)	C	EA	2	•	•	•	•	148	4
N XDOZZ		BLOCK, PILLOW: CYLINDER 145-4510954W5 (80064)	C	EA	4					148	9
N PAOZZ	3120-287-8004	BUSHING, PILLOW BLOCK FF1202-3 (19121)	C	EA	4	•	•	•	•		
N PAOZZ	9525-007-6385	BOLT, LATCH, CLEVIS GGS763 (81348)	C	EA	2	•	•	•	•		
N PAOZZ	5310-926-5875	WASHER, LOCK: 1 1/2 IN. MS35338-152 (96906)	C	EA	2	•	•	•	•		
N PAOZZ	5305-727-6804	SCREW, CAP, HEXAGON HEAD: PILLOW BLOCK MTG, 1/2-13 THD SIZE, 1 3/4 IN. LG MS90726-414 (96906)	C	EA	8	•	•	•	•		
N PAOZZ	5310-989-5945	NUT, PLAIN, HEXAGON: PILLOW BLOCK MTG, 1/2-13 THD SIZE MS35691-35 (96906)	C	EA	20	•	•	•	•		
N PAOZZ	5310-767-9425	WASHER, LOCK: PILLOW BLOCK MTG, 1/2 IN. SCREW SIZE MS15795-818 (96906)	C	EA	20	•	•	•	•		
N PAOZZ	5305-021-3806	BOLT: 1/2-13 X 1 1/2 IN. LG MS35307-113 (96906)	C	EA	12	•	•	•	•		
		GROUP 81 - PROPELLER SHAFT									
N PAOZZ	5315-243-1167	PIN, COTTER: PROPELLER SHAFT NUT, 1/4 IN. DIA, 2 1/4 IN. LG MS24665-643 (96906)	C	EA	4	•	•	•	•	150	1
PAOZZ	5315-889-2702	PIN, COTTER: PROPELLER SHAFT NUT MS24665-656 (96906)	AB	EA	4	•	•	•	•	150	1
PAOZZ	5310-438-3691	NUT, HEXAGON, JAM: PROPELLER MMC4248 (98042)		EA	2	•	•	•	•	150	2
PAOZZ	5310-438-3690	NUT, PLAIN, HEXAGON: PROPELLER SHAFT MMC4249 (98042)		EA	2	•	•	•	•	150	3
PAOHH	2010-540-7690	PROPELLER, SHIP: RH SEAGULLTYPE1RH (72201)		EA	1	•	•	•	•	150	4
PAOHH	2010-540-7689	PROPELLER, SHIP: LH SEAGULLTYPE1LH (72201)		EA	1	•	•	•	•	150	4
C PAOZZ	4730-197-1595	CLAMP, HOSE: STUFFING BOX, 4 IN. R1441 (79645)		EA	2	•	•	•	•	150	5
C HOOZZ		HOSE, FLEXIBLE RUBBER: PROPELLER SHAFT MMC4247 (98042) MANUFACTURE FROM:	AB	EA	2					150	6
C PCOZZ	4720-595-1820	HOSE, AS REQUIRED		FT		•	•	•	•	150	
N HOOZZ		HOSE, FLEXIBLE RUBBER: STUFFING BOX 145-4510951W7 (80064) MANUFACTURE FROM:	C	EA	2					150	6
N PCOZZ	4720-288-9761	HOSE, 6 1/2 IN. REQUIRED FOR EA HOSE		FT		•	•	•	•	150	
PAOZZ	5310-438-3693	NUT, PLAIN, HEXAGON: SHAFT COUPLING MMC42-18 (98042)		EA	24	•	•	•	•	150	7
PAOZZ	5306-437-4475	BOLT, MACHINE: SHAFT COUPLING MMC42-17 (98042)		EA	24	•	•	•	•	150	8

(1)	(2)	(3)	(4)	(5)	(6)				(7)	
		DESCRIPTION			15-DAY ORGANIZATIONAL MAINTENANCE ALW				ILLUSTRATION	
SMR CODE	FEDERAL STOCK NUMBER	REF NUMBER & MFR CODE	USABLE ON CODE	UNIT OF MEAS	QTY INC IN UNIT	(a) 1-5	(b) 6-20	(c) 21-50	(d) 51-100	(a) FIG. NO.	(b) ITEM NO.
PAOZZ	2815-389-6060	COUPLING, SHAFT PROPELLER 5173268 (72582)		EA	2	•	•	•	•	150	9
MOOZZ		KEY, MACHINE: PROPELLER, BRONZE MMCA2M4 (98042) MANUFACTURE FROM:		EA	2					150	10
PAOZZ	9530-233-1289	BAR, BRONZE, 5/8 IN. SQUARE, 6 3/32 IN. REQUIRED FOR EA KEY		EA		•	•	•	•	150	
MOOZZ		PACKING, FLAX: 3/8 IN. SQUARE MMCA2M14 (98042) MANUFACTURE FROM:	AB	EA	2					150	12
PCOZZ	5330-186-8039	PACKING, AS REQUIRED		FT		•	•	•	•	150	
N MOOZZ		PACKING, SHAFT, STUFFING BOX: 7/16 IN. SQUARE JMC175 (75165) MANUFACTURE FROM:	C	EA	2					150	12
N PCOZZ	5330-196-5060	PACKING, FLAX, 7/16 IN. SQUARE, 9 IN. REQUIRED FOR EA PACKING		FT		•	•	•	•	150	
PAOHH	2010-127-4796	SHAFT, PROPELLER: SHIP, BRONZE MMCA2M3 (98042)		EA	2	•	•	•	•	150	13
PCOZZ	2010-076-3737	BEARING: STRUT SHAFT, RUBBER NATIVE (76528)		EA	2	•	•	•	•	150	14
N MOOZZ		SLEEVE, MONEL 245-2410951M15 (80064) MANUFACTURE FROM:	C	EA	2						
N PAOZZ	4710-873-2254	TUBE, K MONEL, 2 7/8 IN OD, 7/16 WALL THK, 6 FT REQUIRED FOR EA SLEEVE 5TONEL27-800 (74900)		EA		•	•	•	•		
PAOZZ		SCREW, CAP, HEXAGON HEAD: STRUT BEARING, 1/2-13 THD SIZE, 1 3/4 IN. LG 7M20-221 (26571)	AB	EA	16	•	•	•	•		
PAOZZ	5310-438-3689	NUT, HEXAGON, SPECIAL: COUPLING, BRASS MMCA2M16 (98042)		EA	2	•	•	•	•		
PAOZZ		WASHER, LOCK: STRUT BEARING, 1/2 IN. SCREW SIZE 7M21-221 (26571)	AB	EA	8	•	•	•	•		
PAOZZ	5305-226-9226	SCREW, CAP, HEXAGON HEAD: PROPELLER SHAFT BEARING, 3/4-10 THD SIZE, 4 IN. LG MS35311-195 (96906)		EA	16	•	•	•	•		
		GROUP 82 - INDICATOR, RUDDER, ANGLE AND TRANSMITTER									
PAOZZ	6320-115-8800	INDICATOR, RUDDER: ANGLE INDICATOR MODEL24V (01162)	A	EA	1	•	•	•	•	152	
XDOZZ		STUD, LEVER ARM RA12 (01162)	A	EA	1					152	1
XDOZZ		LEVER, ARM RA11 (01162)	A	EA	1					152	2
C PAOZZ	5310-819-2585	NUT, PLAIN, HEXAGON: TERMINAL MS35650-106 (96906)	A	EA	4	•	•	•	•	152	3
PAOZZ	5310-264-1390	WASHER, FLAT: TERMINAL MS45901-4 (96906)	A	EA	4	•	•	•	•	152	4
PAOZZ	5305-206-2511	SCREW, MACHINE: TERMINAL MS35215-57 (96906)	A	EA	1	•	•	•	•	152	5
PAOZZ	5305-954-8152	SCREW, MACHINE: TERMINAL MS35215-59 (96906)	A	EA	1	•	•	•	•	152	6

(1) SMR CODE	(2) FEDERAL STOCK NUMBER	(3) DESCRIPTION REF NUMBER & MFR CODE	USABLE ON CODE	(4) UNIT OF MEAS	(5) QTY INC IN UNIT	(6) 15-DAY ORGANIZATIONAL MAINTENANCE ALW (a) 1-5	(b) 6-20	(c) 21-30	(d) 31-100	(7) ILLUSTRATION (a) FIG. NO.	(b) ITEM NO.
PAOZZ		RESISTOR, INDICATOR RA20 (01162)	A	EA	1	•	•	•	•	152	7
PAOZZ	6320-779-5923	RECEIVER RUDDER: ANGLE INDICATOR RA1 (01162)	A	EA	1	•	•	•	•	152	8
PAOZZ	5305-059-8382	SCREW, MACHINE: ARM MTG MS35215-52 (96906)	A	EA	2	•	•	•	•	152	9
XDOZZ		ARM, RUDDER RA6 (01162)	A	EA	1					152	10
PAOZZ	5305-954-8154	SCREW, MACHINE: SENDING UNIT MTG MS35215-61 (96906)	A	EA	2	•	•	•	•	152	11
PAOZZ	6320-779-5924	SENDING UNIT, RUDDER ANGLE RA2 (01162)	A	EA	1	•	•	•	•	152	12
PAOZZ	6320-115-8799	INDICATOR, RUDDER ANGLE MK2 (72201)	BC	EA	1	•	•	•	•	153	
XAOZZ		TUBE, STUFFING 31-5 (72201)	BC	EA	1					153	1
PAOZZ		CABLE AND WIRE 31-15 (72201)	BC	EA	1	•	•	•	•	153	2
PAOZZ	6320-115-8798	JOINT, BALL, W/WASHER AND NUT 31-3 (72201)	BC	EA	1	•	•	•	•	153	3
XAOZZ		ARM RUDDER, ANGLE INDICATOR 31-4 (72201)	BC	EA	1					153	4
XAOZZ		COLLAR, W/SETSCREW 31-7 (72201)	BC	EA	1					153	5
PAOZZ	6320-115-8797	BEARING, LONG 31-8 (72201)	BC	EA	1	•	•	•	•	153	6
PAOZZ	5305-005-0838	SCREW, MACHINE: COVER MTG 31-14 (72201)	BC	EA	8	•	•	•	•	153	7
C XAOZZ		COVER, TRANSMITTER 31-2 (72201)	BC	EA	1					153	8
PCOZZ	5330-458-2058	GASKET: TRANSMITTER 31-13 (72201)	BC	EA	1	•	•	•	•	153	9
C XDOZZ		BRACKET 31-12 (72201)	BC	EA	1					153	10
C XAOZZ		GEAR, SMALL, W/SETSCREW 31-11 (72201)	BC	EA	1					153	11
C XAOZZ		GEAR, LARGE, W/SETSCREW 31-10 (72201)	BC	EA	1					153	12
PAOZZ	6320-115-8796	BEARING, SHORT 31-9 (72201)	BC	EA	1	•	•	•	•	153	13
PAOZZ	5905-221-8094	POTENTIOMETER, TRANSMITTER 31-1 (72201)	BC	EA	1	•	•	•	•	153	14
C XAOZZ		SHAFT 31-6 (72201)	BC	EA	1					153	15
C XAOZZ		CASE, TRANSMITTER 31-16 (72201)	BC	EA	1					153	16
C XAOZZ		COVER, BATTERY BOX 31-22 (72201)	BC	EA	1					153	17
PCOZZ	5330-458-2221	GASKET: BATTERY BOX 31-23 (72201)	BC	EA	1	•	•	•	•	153	18
XAOZZ		CLIP, BATTERY 31-19 (72201)	BC	EA	1					153	19
PCOZZ	6130-120-1020	BATTERY: SIZE D FLASHLIGHT MS75059 (96906)	BC	EA	1	•	•	•	•	153	20

(1) SMR CODE	(2) FEDERAL STOCK NUMBER	(3) DESCRIPTION REF NUMBER & MFR CODE	USABLE ON CODE	(4) UNIT OF MEAS	(5) QTY INC IN UNIT	(6) 15-DAY ORGANIZATIONAL MAINTENANCE ALW (a) 1-5	(b) 6-20	(c) 21-50	(d) 51-100	(7) ILLUSTRATION (a) FIG. NO.	(b) ITEM NO.
XAOZZ		STRIP, TERMINAL 31-20 (72201)	BC	EA	1					153	21
PAOZZ	5905-221-8095	POTENTIOMETER, BATTERY GAIN 31-17 (72201)	BC	EA	1	•	•	•	•	153	22
PDOZZ	5325-461-5886	GROMMET, RUBBER 31-21 (72201)	BC	EA	2	•	•	•	•	153	23
C XAOZZ		CASE, BATTERY BOX 31-18 (72201)	BC	EA	1					153	24
PAOZZ	6320-115-8795	METER: 3 IN. SCALE 31-25 (72201)	BC	EA	1	•	•	•	•	153	25
PAOZZ	5905-221-8096	RESISTOR, FIXED: 1200 OHMS 31-26 (72201)	BC	EA	2	•	•	•	•		
		GROUP 83 - RUDDER									
MOOZZ		GASKET: NEOPRENE, 1/8 IN. THK MMC8941 (98042) MANUFACTURE FROM:	AB	EA	2					154	1
PDOZZ	5330-261-5761	GASKET, AS REQUIRED		YD		•	•	•	•	154	
MOOZZ		PACKING, FLAX: 1/4 IN. SQUARE MMC45-12 (98042)	A	EA	1					154	13
N PAOZZ	4730-049-8126	FITTING, LUBRICATION: RUDDER THRUST BEARING, 30 DEG, 1/8-27 THD SIZE 1988 (70270)	C	EA	4	•	•	•	•	155	3
XDOZZ		TILLER, EMERGENCY AMC45F3F4M31 (98042)	AB	EA	1						
N PAOZZ	4730-172-0049	FITTING, LUBRICATION: RUDDER PORT BEARING, 1/8-27 THD SIZE MS15006-1 (96906)	C	EA	2	•	•	•	•		
N PAOZZ	4730-231-2428	CAP, PIPE: TILLER ARM, 1 1/2 IN. WWP521 (81348)	C	EA	1	•	•	•	•		
		GROUP 84 - HULL									
H XDOZZ		PILOT HOUSE CANOPY, COMPLETE 145-4510955-1-3-5 (80064)	C	EA	1					156	
N PCOZZ	2540-732-3743	BLADE, WIPER, STANDARD LE721156 (24956)	C	EA	1	•	•	•	•	156	1
N XDOZZ		ARM, WIPER: BLADE ADJUSTABLE, STD LE721156 (24956)	C	EA	1					156	2
N PAOZZ	2540-881-0467	MOTOR, WINDSHIELD WIPER WWF24-19-1030 (05890)	C	EA	1	•	•	•	•	156	3
H PAOZZ	5305-701-5074	FASTENER, SEAMS: NO. 10-24 THD SIZE, 1/2 IN. LG MS51959-63 (96906)	C	EA	8	•	•	•	•	156	4
N PAOZZ	5305-701-5071	FASTENER, SEAMS: NO. 10-24 THD SIZE, 3/8 IN. LG MS51959-61 (96906)	C	EA	8	•	•	•	•	156	5
N XDOZZ		ADJUSTER, WINDSHIELD FIQB2N0312INLG (46576)	C	EA	2					156	6
H PAOZZ	5315-234-1863	PIN, COTTER: EYE BOLT PINS, 3/32 IN. DIA, 3/4 IN. LG MS24665-300 (96906)	C	EA	22	•	•	•	•	156	7

(1) SMR CODE	(2) FEDERAL STOCK NUMBER	(3) DESCRIPTION REF NUMBER & MFR CODE	USABLE ON CODE	(4) UNIT OF MEAS	(5) QTY INC IN UNIT	(6) 15-DAY ORGANIZATIONAL MAINTENANCE ALW (a) 1-5	(b) 6-20	(c) 21-50	(d) 51-100	(7) ILLUSTRATION (a) FIG. NO.	(b) ITEM NO.
N MOOZZ		PIN, CANOPY, EYE BOLT 145-4510955-38 (80064) MANUFACTURE FROM:	C	EA	11					156	8
N PAOZZ	5910-189-0577	BAR, ROUND, 5/16 IN., AS REQUIRED QQS763CLASS304 (81348)		FT		•	•	•	•	156	
N PAOZZ	5310-934-9727	NUT, PLAIN, HEXAGON, JAM: WINDOW DOGS, 3/4-10 THD SIZE MS35691-59 (96906)	C	EA	4	•	•	•	•	156	9
N PAOZZ	5310-924-5897	NUT, PLAIN, HEXAGON: WINDOW DOGS, 3/4-10 THD SIZE MS51971-8 (96906)	C	EA	4	•	•	•	•	156	10
N PAOZZ	5310-167-0809	WASHER, FLAT: WINDOW DOGS, 3/4 IN. AN960C1216 (88044)	C	EA	8	•	•	•	•	156	11
N XDOZZ		DOG, WINDSHIELD 145-4510955-39 (80064)	C	EA	4					156	12
N PAOZZ	9340-417-0541	GLASS, SAFETY, WINDSHIELD: FRONT 145-4510955-43 (80064)	C	EA	2	•	•	•	•	156	13
N MOOZZ		LOCK, WINDOW: EXTERNAL 145-4510955-48 (80064) MANUFACTURE FROM:	C	EA	6					156	14
N PCOZZ		SEAL, LOCK, RUBBER, AS REQUIRED 2230GRAY (77969)		FT		•	•	•	•	156	
N XDOZZ		WINDSHIELD ASSEMBLY 145-4510955-5 (80064)	C	EA	2					156	15
N PAOZZ		LIGHT, CABIN, RED 591RED (89617)	AC	EA	1	•	•	•	•	156	16
N PAOZZ	6240-269-0966	LAMP, INCANDESCENT MS15584-11 (96906)	C	EA	1	•	•	•	•	156	17
N PAOZZ	9340-417-0538	GLASS, SAFETY: WINDSHIELD SIDE 145-4510955-41 (80064)	C	EA	2	•	•	•	•	156	18
N PAOZZ	9340-417-0540	GLASS, SAFETY: WINDSHIELD CORNER 145-4510955-42 (80064)	C	EA	2	•	•	•	•	156	19
N PAOZZ	5310-768-0321	NUT, PLAIN, HEXAGON: EYE BOLT, 1/2-13 THD SIZE MS51971-5 (96906)	C	EA	7	•	•	•	•	156	20
N PAOZZ	5310-926-5880	WASHER, LOCK: EYE BOLT, 1/2 IN. SCREW SIZE MS35338-162 (96906)	C	EA	7	•	•	•	•	156	21
N PAOZZ	5310-167-0803	WASHER, FLAT: HINGE AND DOG PINS, 5/16 IN. AN960C516 (88044)	C	EA	22	•	•	•	•	156	22
N PAOZZ	5306-009-3895	EYE BOLT, CANOPY AD832424 (02064)	C	EA	7	•	•	•	•	156	23
N XAOZZ		PILOT HOUSE ASSEMBLY 145-4510955-3 (80064)	C	EA	1					156	24
N MOOZZ		GASKET, PACKING, PORT 145-4510955-49 (80064) MANUFACTURE FROM:	C	EA	6					156	25
N PCOZZ	5330-060-2037	GASKET, RUBBER, 1/2 X 1 IN., AS REQUIRED MIL-R-880 (81349)		FT		•	•	•	•	156	
N MOOZZ		KEY, WINDOW, EXTERNAL: GLASS RETAINER 145-4510955-55 (80064) MANUFACTURE FROM:	C	EA	6					156	
N PAOZZ		KEY, RUBBER, AS REQUIRED 4630RAY (77969)		FT		•	•	•	•	156	

(1)	(2)	(3)	(4)	(5)	(6)				(7)	
		DESCRIPTION			15-DAY ORGANIZATIONAL MAINTENANCE ALW				ILLUSTRATION	
SMR CODE	FEDERAL STOCK NUMBER	REF NUMBER & MFR CODE	USABLE ON CODE	UNIT OF MEAS	QTY INC IN UNIT	(a) 1-5	(b) 6-20	(c) 21-50	(d) 51-100	(a) FIG. NO.	(b) ITEM NO.
N MOOZZ		CABLE: 2 COND, 3#OH, 600V FLEX 145-4510955-60 (80064) MANUFACTURE FROM:	C	EA	6					156	
N XDOZZ		UPPER, HINGE, HALF, 4 EA 145-4510955-26 (80064)		EA						156	
N XDOZZ		LOWER, HINGE, HALF CANOPY, 7 EA 145-4510955-27 (80064)		EA						156	
N MHOZZ		WEDGE, DOG 145-4510955-28 (80064)	C	EA	4					156	
N MHOZZ		DOG, SPINDLE 145-4510955-33 (80064)	C	EA	2					156	
N MOOZZ		ANGLE, EYE BOLT, LATCH 145-4510956-40 (80064) MANUFACTURE FROM:	C	EA	7					156	
N PAOZZ	9520-034-1441	ANGLE, 3/8 X 1 1/2 X 2 IN., AS REQUIRED MILS20166 (81349)		FT		*	*	*	*	156	
N PAOZZ	5310-982-4945	NUT, PLAIN, SQUARE: LADDER, 5/8-11 THD SIZE MS21304-6 (96906)	C	EA	8	*	*	*	*	157	1
N PAOZZ	5306-959-7818	BOLT, MACHINE: LADDER MTG, SQUARE HEAD, 5/8-11 THD SIZE, 1 1/2 IN. LG MS34355-159 (96906)	C	EA	4	*	*	*	*	157	2
N PAOZZ	5315-982-1914	PIN, TOGGLE: STANCHION BRACE, 3/8 IN. DIA, 3/4 IN. LG 3-8INX3-4INLG (74427)	C	EA	14	*	*	*	*	157	3
MOOZZ		BRACE 145-4510934-62 (80064) MANUFACTURE FROM:		EA	14					157	4
PAOZZ		PIPE, BLACK, 3/4 IN., AS REQUIRED MILT20157TYPEE (81349)		EA		*	*	*	*	157	
N PAOZZ	5315-982-7813	PIN, TOGGLE: LIFELINE, 3/8 IN. DIA, 3 IN. LG 3-8INX3INLG (74427)	C	EA	28	*	*	*	*	157	5
N XDOZZ		STANCHION, LIFELINE 145-4510934-63 (80064)	C	EA	14					157	6
XDOZZ		SOCKET: LIFELINE STANCHION 145-4510934-18 (80064)	C	EA	14					157	7
N PAOZZ		HOOK, SWIVEL EYE SNAP: LIFELINES FIG251 (45387)	C	EA	19	*	*	*	*	157	8
PAOZZ	5315-982-1914	PIN, TOGGLE: LIFELINE, 3/8 IN. DIA, 3/4 IN. LG 3-8INX3-4INLG (74427)		EA	14	*	*	*	*	157	9
N PAOZZ	5340-005-5807	TURNBUCKLE LIFELINE: 1/2 IN. DIA, 6 IN. LG FIG305 (45387)	C	EA	10	*	*	*	*	157	10
N PAOZZ	4030-286-5429	THIMBLE WIRE: LIFELINE, 3/8 IN. ROPE FFT276TYPE2 (81348)	C	EA	14	*	*	*	*	157	11
N PAOZZ	4030-805-5806	HOOK: LIFELINE OPENINGS, 3/8 IN. 66 (72671)	C	EA	10	*	*	*	*	157	12
N MOOZZ		LIFELINE 145-4510934-48 (80064) MANUFACTURE FROM:	C	EA	1					157	13
N PAOZZ	4010-273-2904	ROPE, WIRE, 3/8 IN. DIA, AS REQUIRED RRW0410TYPE1CLASS2CONSTRUCTION3 (81348)		RL		*	*	*	*	157	
N PAOZZ	3020-887-8672	SLEAVE, PRESS, WIRE ROPE: LIFELINES 400861 (91675)	C	EA	12	*	*	*	*	157	14

	(1) SMR CODE	(2) FEDERAL STOCK NUMBER	(3) DESCRIPTION REF NUMBER & MFR CODE	USABLE ON CODE	(4) UNIT OF MEAS	(5) QTY INC IN UNIT	(6) 15-DAY ORGANIZATIONAL MAINTENANCE ALW (a) 1-5	(b) 6-20	(c) 21-50	(d) 51-100	(7) ILLUSTRATION (a) FIG. NO.	(b) ITEM NO.
N	PAOZZ	5305-804-8055	SCREW, MACHINE: ENGINE ROOM DECK PLATES, 1/2-13 THD SIZE, 1 1/4 IN. LG MS35249-142 (96906)	C	EA	301	•	•	•	•	158	1
	XDOZZ		PLATE, DECK, MAIN 145-4510916P13 (80064)	C	EA	1					158	2
	MOOZZ		GASKET: DECK PLATE 145-4510931-8 (80064) MANUFACTURE FROM:	C	EA	2					158	3
	PCOZZ	5330-261-5761	GASKET, NEOPRENE, 1/8 IN. THK, AS REQUIRED MMG156 (81348)		SH		•	•	•	•	158	
N	PAOZZ	5310-768-0321	NUT, PLAIN, HEXAGON: ENGINE ROOM DECK PLATES, 1/2-13 THD SIZE MS51971-5 (96906)	C	EA	308	•	•	•	•	158	4
N	PAOZZ	5305-701-5118	SCREW, MACHINE: DECK PLATES, FLATHEAD, NO. 10-24 THD SIZE, 1 IN. LG MS51959-67 (96906)	C	EA	84	•	•	•	•	158	5
N	MOOZZ		PLATE, COVER: 20 1/2 IN. DIA 145-4510931-39 (80064) MANUFACTURE FROM:	C	EA	14					158	6
N	PAOZZ	9535-866-0295	PLATE, ALUMINUM, 1/4 IN. THK, AS REQUIRED QQA250-7 (81348)		SH		•	•	•	•	158	
N	MOOZZ		GASKET, CANVAS: SIDE DECK PLATES 145-4510931-36 (80064) MANUFACTURE FROM:	C	EA	14					158	7
N	PCOZZ	8305-170-5385	CLOTH, DUCK, NO. 6, AS REQUIRED CCCC419TYPE1 (81348)		FT		•	•	•	•	158	
N	PAOZZ	5310-655-9908	NUT, PLAIN, HEXAGON: DECK PLATES, NO. 10-24 THD SIZE 452-25 (05258)	C	EA	84	•	•	•	•	158	8
N	MOOZZ		GASKET, NEOPRENE: ENGINE ROOM COVER 145-4510931-8 (80064) MANUFACTURE FROM:	C	EA	2					158	10
N	PAOZZ	5330-261-5761	GASKET, NEOPRENE, 1/8 IN. THK, AS REQUIRED MMG156 (81348)		FT		•	•	•	•	158	
N	PAOZZ	5305-646-7389	SCREW, CAP, HEXAGON HEAD: PUMP WELL MANHOLE COVERS MTG, 1/2-13 THD SIZE, 1 IN. LG MS35307-409 (96906)	C	EA	40	•	•	•	•	158	11
	XDOZZ		COVER PLATE 145-4510931-29 (80064)	C	EA	2					158	12
N	MOOZZ		GASKET, NEOPRENE: MANHOLE COVER, WELL DECK 145-4510931-30 (80064) MANUFACTURE FROM:	C	EA	2					158	13
N	PCOZZ	5330-261-5761	GASKET, NEOPRENE, 1/8 IN., AS REQUIRED MMG156 (81348)		SH		•	•	•	•	158	
	PAOZZ	5305-646-7389	SCREW, CAP, HEXAGON HEAD: COVER, 1/2-13 THD SIZE, 1 IN. LG MS35307-409 (96906)		EA	220	•	•	•	•	158	14
N	XDOZZ		PLATE, DECK, PERKO 6: WELL SIDE POCKET COVER 526 (46576)	C	EA	14					158	15
N	MOOZZ		GASKET, NEOPRENE: MANHOLE COVERS 145-4510931-40 (80064) MANUFACTURE FROM:	C	EA	14					158	16
N	PCOZZ	5330-261-5761	GASKET, NEOPRENE, 1/8 IN., AS REQUIRED MMG156 (81348)		FT		•	•	•	•	158	

(1) SMR CODE	(2) FEDERAL STOCK NUMBER	(3) DESCRIPTION REF NUMBER & MFR CODE	USABLE ON CODE	(4) UNIT OF MEAS	(5) QTY INC IN UNIT	(6) 15-DAY ORGANIZATIONAL MAINTENANCE ALW (a) 1-5	(b) 6-20	(c) 21-30	(d) 31-100	(7) ILLUSTRATION (a) FIG. NO.	(b) ITEM NO.
XDOZZ		LOCKER, LAZARETTE MHC29M14 (98042)	A	EA	1						
XDOZZ		BOX, WRENCH STORAGE MHC29M15 (98042)	A	EA	1						
C XDOZZ		BRACKET, FIRE EXTINGUISHER 108110 (01317)		EA	4						
XDOZZ		VENTILATORS, COWL: 8 IN. 513 (46576)	A	EA	4						
XDOZZ		PLATE, REGISTRY MHC32-42 (98042)	A	EA	1						
XDOZZ		SPRING, HATCH: DOG CATCH MHC32-62 (98042)	A	EA	12						
PAOZZ	2040-115-3706	RATCHET, LOAD BINDER 12 (11749)	AB	EA	2	•	•	•	•		
PAOZZ	3020-241-4432	SHEAVE, MASTHEAD FIG8461 (79577)	AB	EA	1	•	•	•	•		
XDOZZ		SHEAVE, MAST MHC8-39 (98042)	AB	EA	1						
XDOZZ		CABLE ASSEMBLY: BOAT HOISTING MHC53E1E2E3 (98042)	AB	EA	1						
XDOZZ		THIMBLE, WIRE: 3/4 IN. RAMP CABLE FFT276 (81348)	AB	EA	1						
XDOZZ		CLAMP, CABLE: RAMP CABLE MS16842-4 (96906)	AB	EA	4						
MOOZZ		ROPE, WIRE: 60 FT, RAMP CABLE MHC19M17 (98042) MANUFACTURE FROM:	AB	EA	1						
PAOZZ	4010-542-2251	WIRE ROPE, AS REQUIRED		FT		•	•	•	•		
MOOZZ		GASKET: MANHOLE COVER MHC24-5 (98042) MANUFACTURE FROM:	AB	EA	1						
PCOZZ	5330-261-5761	GASKET, AS REQUIRED		FT		•	•	•	•		
MOOZZ		GASKET: RAMP MHC26M5 (98042) MANUFACTURE FROM:	A	EA	1						
PCOZZ	5330-845-1471	GASKET, AS REQUIRED		YD		•	•	•	•		
MOOZZ		GASKET: RAMP GUN67-17 (26571) MANUFACTURE FROM:	B	EA	1						
PCOZZ	5330-845-1471	GASKET, AS REQUIRED		YD		•	•	•	•		
MOOZZ		GASKET: ENGINE, ACCESS MHC32-8 (98042) MANUFACTURE FROM:	A	EA	1						
PCOZZ	5330-244-0192	GASKET, AS REQUIRED		YD		•	•	•	•		
MOOZZ		GASKET: COWL VENT MHC32-13 (98042) MANUFACTURE FROM:	A	EA	1						
PCOZZ	5330-261-5761	GASKET, AS REQUIRED		YD		•	•	•	•		
MOOZZ		GASKET: DECK PLUGS MHC32-36 (98042) MANUFACTURE FROM:	A	EA	1						
PCOZZ	5330-261-5761	GASKET, AS REQUIRED		YD		•	•	•	•		
MOOZZ		GASKET: COVER WELL DECK MHC32-40 (98042) MANUFACTURE FROM:	A	EA	1						
PCOZZ	5330-261-5761	GASKET, AS REQUIRED	A	YD		•	•	•	•		

(1) SMR CODE	(2) FEDERAL STOCK NUMBER	(3) DESCRIPTION REF NUMBER & MFR CODE	USABLE ON CODE	(4) UNIT OF MEAS	(5) QTY INC IN UNIT	(6) 15-DAY ORGANIZATIONAL MAINTENANCE ALW (a) 1-5	(b) 6-20	(c) 21-50	(d) 51-100	(7) ILLUSTRATION (a) FIG. NO.	(b) ITEM NO.
MOOZZ		GASKET: HATCH MMC32-67 (98042) MANUFACTURE FROM:		EA	1						
PCOZZ	5330-849-8809	GASKET, AS REQUIRED		YD		•	•	•	•		
PCOZZ	8040-273-8717	CEMENT, RUBBER: GASKET MILA1154 (81349)		TB	2	•	•	•	•		
MOOZZ		PACKING, RUDDER 3412-222 (26571) MANUFACTURE FROM:	B	EA	1						
PCOZZ	5330-196-5060	PACKING, AS REQUIRED		YD		•	•	•	•		
N MOOZZ		ROD, SOUNDING 145-4510926P19 (80064) MANUFACTURE FROM:	C	EA	2						
N PAOZZ	5510-267-2394	WOOD, OAK, 1 IN. THK, AS REQUIRED MML736 (81348)		FT		•	•	•	•		
N XOOZZ		BRACKET, LANTERN: ENGINE ROOM 9552934B (76714)	C	EA	1						
N MOOZZ		ROPE LASHING: RAMP HOIST RATCHET, SECURING 145-4510925P6 (80064) MANUFACTURE FROM:	C	EA	2						
N PCOZZ	4020-689-5688	ROPE, MANILA, 1 1/8 IN. CIRCUMFERENCE, AS REQUIRED TR605TYPEMCLASS2 (81348)		FT		•	•	•	•		
N MOOZZ		STAPLE: RATCHET RAMP SECURING 145-4510926M11 (80064) MANUFACTURE FROM:	C	EA	2						
N PAOZZ	9510-229-4769	ROD, STEEL, 1/2 IN. DIA, AS REQUIRED QQS631COMPSITION1020 (81348)		FT		•	•	•	•		
N PAOZZ	5315-982-6307	PIN, TOGGLE: EMERGENCY STEERING RUDDER STOWAGE 1-4INX3-4INLG (46576)	C	EA	1	•	•	•	•		
N MOOZZ		CHAIN, SINGLE JACK: EMERGENCY STEERING RUDDER STOWAGE 145-4510926M5 (80064) MANUFACTURE FROM:	C	EA	1						
N PAOZZ		CHAIN, SINGLE JACK, NO. 16, AS REQUIRED RRC271CLASS7 (81348)		FT		•	•	•	•		
N MOOZZ		BOX ASSEMBLY, BATTERY 145-4510920 (80064) MANUFACTURE FROM:	C	EA	1						
N MOOZZ		BOX, BATTERY 145-4510920-1 (80064) MANUFACTURE FROM:	C	EA	1						
N PAOZZ	9515-034-1452	PLATE, STEEL, NO. 1.5 PLATE, AS REQUIRED QQS698 (81348)		SH		•	•	•	•		
N MOOZZ		LINING, BATTERY BOX 145-4510920-2 (80064) MANUFACTURE FROM:	C	EA	1						
N PAOZZ	9535-232-7485	SHEET, LEAD, NO. 4, AS REQUIRED QQL201GRADEC (81348)		SH		•	•	•	•		
N MOOZZ		STIFFENER, PLYWOOD, BATTERY BOX 145-4510920-3 (80064) MANUFACTURE FROM:	C	EA	4						
N PAOZZ	5530-129-2149	PLYWOOD, 1/2 IN. THK, AS REQUIRED NNP530 (81348)		SH		•	•	•	•		

(1) SMR CODE	(2) FEDERAL STOCK NUMBER	(3) DESCRIPTION REF NUMBER & MFR CODE	USABLE ON CODE	(4) UNIT OF MEAS	(5) QTY INC IN UNIT	(6) 15-DAY ORGANIZATIONAL MAINTENANCE ALW (a) 1-5	(b) 6-20	(c) 21-50	(d) 51-100	(7) ILLUSTRATION (a) FIG. NO.	(b) ITEM NO.
N MOOZZ		SPACER, PLYWOOD, BATTERY BOX, COMMERCIAL 145-4510920-4 (80064) MANUFACTURE FROM:	C	EA	4						
N PAOZZ	5530-129-2093	PLYWOOD, 1/4 IN. THK, AS REQUIRED MMP530 (81348)		SH		•	•	•	•		
N MOOZZ		COVER, PLYWOOD, BATTERY BOX, COMMERCIAL 145-4510920-7 (80064) MANUFACTURE FROM:	C	EA	1						
N PAOZZ	5530-219-2005	PLYWOOD, 3/4 IN. THK, AS REQUIRED MMP530 (81348)		SH		•	•	•	•		
N MOOZZ		SEPARATOR, BATTERY BOX, PLYWOOD, COMMERCIAL 145-4510920-19 (80064) MANUFACTURE FROM:	C	EA	7						
N PAOZZ	5530-129-2005	PLYWOOD, 3/4 IN. THK, AS REQUIRED MMP530 (81348)		SH		•	•	•	•		
N PAOZZ	5305-014-9289	SCREW, WOOD: BATTERY BOX, FLATHEAD, BRASS, NO. 8, 1/2 IN. LG 149289 (00000)	C	EA	24	•	•	•	•		
N PAOZZ	5315-010-3803	NAIL, ESCUTCHEON: LEAD LINING, BRASS, NO. 16, 1/2 IN. LG NOREF (33333)	C	EA	48	•	•	•	•		
N PAOZZ	5305-014-9307	SCREW, WOOD: COVER, BRASS, FLATHEAD, NO. 8, 1 1/2 IN. LG MS35492-255 (96906)	C	EA	48	•	•	•	•		
N PAOZZ	5306-884-8787	BOLT, MACHINE: BATTERY BOX SECURING, 3/8-16 THD SIZE, 1 IN. LG MS35355-64 (96906)	C	EA	4	•	•	•	•		
N PAOZZ	5310-637-9541	WASHER, LOCK: BATTERY BOX SECURING, 3/8 IN. SCREW SIZE MS35338-46 (96906)	C	EA	4	•	•	•	•		
N PAOZZ	5315-982-6308	PIN, TOGGLE: MAST STOWAGE, 3/8 IN. DIA, 3 1/2 IN. LG 4284 (08716)	C	EA	1	•	•	•	•		
N MOOZZ		CHAIN, SINGLE JACK: MAST PIN 125-4510929-2 (80064) MANUFACTURE FROM:	C	EA	1						
N PAOZZ		CHAIN, SINGLE JACK, 16 GAGE, AS REQUIRED RRC271CLASS7 (81348)		FT		•	•	•	•		
N MOOZZ		LINE LASHING: MAST STOWAGE, 3/4 IN. DIA 125-4510929-3 (80064) MANUFACTURE FROM:	C	EA	6						
N PAOZZ	4020-231-9021	LINE, MANILA, 3/4 IN. DIA, AS REQUIRED TR605TYPEN (81348)		FT		•	•	•	•		
N MOOZZ		NEOPRENE LINER: MAST STOWAGE BRACKET 125-4510929-14 (80064) MANUFACTURE FROM:	C	EA	7						
N PCOZZ	5330-261-5760	RUBBER, NEOPRENE, 1/16 IN. THK, AS REQUIRED MMG1568 (81348)		SH		•	•	•	•		
A PCOZZ	8040-145-0019	ADHESIVE: LINING 3M2216BN (94959)	C	QT	1	•	•	•	•		
N MOOZZ		CHAIN, CLOSED: LIFELINE OPENINGS, 1/4 IN. LINK 145-4510934-72 (80064) MANUFACTURE FROM:	C	EA	5						
N PAOZZ		CHAIN, CLOSED, LINK, 1/4 IN., AS REQUIRED RRC271TYPE1GRADECCLASS2 (81348)		FT		•	•	•	•		

	(1) SMR CODE	(2) FEDERAL STOCK NUMBER	(3) DESCRIPTION REF NUMBER & MFR CODE	USABLE ON CODE	(4) UNIT OF MEAS	(5) QTY INC IN UNIT	(6) 15-DAY ORGANIZATIONAL MAINTENANCE ALW (a) 1-5	(b) 6-20	(c) 21-50	(d) 51-100	(7) ILLUSTRATION (a) FIG. NO.	(b) ITEM NO.
N	MOOZZ		CHAIN, SINGLE JACK: BRACE PIN LIFELINE STANCHION 145-4510934-49 (80064) MANUFACTURE FROM:	C	EA	56						
N	PAOZZ	4010-228-9963	CHAIN, SINGLE JACK, NO. 10, AS REQUIRED RRC271CLASS7 (81348)		FT		•	•	•	•		
N	MOOZZ		HOSE CONNECTION, RUBBER: KEEL COOLER VENT 145-4510915F2 (80064) MANUFACTURE FROM:	C	EA	2						
N	PCOZZ	4720-235-4121	HOSE, RUBBER, 2 3/8 IN. ID, AS REQUIRED ZZH428TYPE2GRADEBCLASS1 (81348)		FT		•	•	•	•		
N	PAOZZ	4730-908-6292	CLAMP, HOSE, KEEL COOLER VENT HOSE, 2 EA MS35842-14 (96906)		EA		•	•	•	•		
N	PAOZZ	5310-240-7629	NUTSERT: DECK PLATE, 3/8-16 THD SIZE 9504-12 (19738)	C	EA	325	•	•	•	•		
N	PAOZZ	5305-925-4801	SCREW, MACHINE: DECK PLATE, PAN HEAD, 3/8-16 THD SIZE, 5/8 IN. LG MS35275-308 (96906)	C	EA	325	•	•	•	•		
N	PAOZZ	4730-753-8997	PLUG, PIPE: DRAIN RAMP FACE, 3/4-14 THD SIZE 7538997 (19207)	C	EA	2	•	•	•	•		
N	PAOZZ	5315-982-7833	PIN, TOGGLE, EYE COLLAR: ANCHOR STOWAGE 3-81NX21-21NLG (08716)	C	EA	1	•	•	•	•		
N	PACZZ	5305-646-7389	SCREW, CAP, HEXAGON HEAD: WINCH COVER PLATE, 1/2-13 THD SIZE, 1 IN. LG MS35307-409 (96906)	C	EA	38	•	•	•	•		
N	MOOZZ		GASKET, NEOPRENE: WINCH PLATE, 1/8 IN. THK 145-4510942-11 (80064) MANUFACTURE FROM:	C	EA	1						
N	PCOZZ	5330-261-5761	GASKET, NEOPRENE, 1/8 IN. THK, AS REQUIRED HHG156 (81348)		SH		•	•	•	•		
N	MOOZZ		GASKET, NEOPRENE: WINCH PLATE OIL DRAIN 145-4510942-12 (80064) MANUFACTURE FROM:	C	EA	1						
N	PCOZZ	5330-261-5761	GASKET, NEOPRENE, 1/8 IN. THK, AS REQUIRED HHG156 (81348)		SH		•	•	•	•		
N	MOOZZ		WIRE, ROPE: RAMP WINCH, 3/4 IN. DIA 145-4510942-14 (80064) MANUFACTURE FROM:	C	EA	1						
N	PAOZZ	4010-542-2402	ROPE, WIRE, 3/4 IN., AS REQUIRED RRW410TYPE1CLASS3CONST3 (81348)	C	CL		•	•	•	•		
N	PAOZZ	3020-927-1617	SHEAVE LEAD: RAMP CABLE LEAD 4241 (08097)	C	EA	1	•	•	•	•		
N	PAOZZ		SOCKET EYE, GALVANIZED: RAMP CABLE GD275 (07232)	C	EA	1	•	•	•	•		
N	PAOZZ	5315-982-1955	PIN, SHEAVE: WINCH SHEAVE, 1 1/2 IN. DIA, 4 1/2 IN. LG 4273 (97052)	C	EA	1	•	•	•	•		
N	XDOZZ		LOAD BINDER, RATCHET: RAMP SECURING MODRC (93649)	C	EA	2						

(1) SMR CODE	(2) FEDERAL STOCK NUMBER	(3) DESCRIPTION REF NUMBER & MFR CODE	USABLE ON CODE	(4) UNIT OF MEAS	(5) QTY INC IN UNIT	(6) 15-DAY ORGANIZATIONAL MAINTENANCE ALW (a) 1-5	(b) 6-20	(c) 21-50	(d) 51-100	(7) ILLUSTRATION (a) FIG. NO.	(b) ITEM NO.
N MOOZZ		CHAIN PROOF COIL: RAMP BINDERS 145-4510942-53 (80064) MANUFACTURE FROM:	C	EA	1						
N PAOZZ	4010-219-9395	CHAIN PROOF COIL, 5/8 IN., AS REQUIRED RRC271TYPE1GRADECCLASS4 (81348)		FT		•	•	•	•		
N PAOZZ	4030-149-5574	SHACKLE ANCHOR, GALVANIZED: RAMP BINDERS, DECK RRC271TYPE4CLASS (81348)	C	EA	2	•	•	•	•		
N PAOZZ	4030-185-0476	SHACKLE CHAIN, GALVANIZED: RAMP BINDERS TO CHAIN LINK MAS1043-10 (80205)	C	EA	2	•	•	•	•		
N PAOZZ		LINK, SIDE LAP: RAMP BINDERS TO CHAIN SHACKLE TO CHAIN, 5/8 IN., GALVANIZED RRC271TYPE3GALVANIZED (81348)	C	EA	4	•	•	•	•		
N PAOZZ		HOOK, C EYE: RAMP BINDER 320C1-1-4X1-7-8IN (75535)	C	EA	2	•	•	•	•		
N PAOZZ	4730-517-8062	FITTING, LUBRICATION: WINCH LEAD SHEAVE, 1/8-27 THD SIZE 1634 (95879)	C	EA	1	•	•	•	•		
K PAOZZ	4730-595-0677	COUPLING PIPE: LUBRICATION FITTING, 1/8-27 THD SIZE WMP521 (81348)	C	EA	1	•	•	•	•		
N MOOZZ		HOSE: WINCH SHEAVE LUBRICATION FITTING 317B50-18FTGS (95879) MANUFACTURE FROM:	C	EA	1						
N PCOZZ	4720-887-8682	HOSE, RUBBER, AS REQUIRED 317B50F (95879)		FT		•	•	•	•		
N PACZZ	5305-727-6804	SCREW, CAP, HEXAGON HEAD: STRUT BEARING, 1/2-13 THD SIZE, 1 3/4 IN. LG MS35307-414 (96906)	C	EA	16	•	•	•	•		
N PACZZ	5310-933-8778	WASHER, LOCK: STRUT BEARING SCREW, 1/2 IN. SCREW SIZE MS35338-143 (96906)	C	EA	16	•	•	•	•		
N PACZZ	5305-917-6337	SETSCREW: STRUT BEARING RETAINER, CUP POINT, 3/8-16 THD SIZE, 5/8 IN. LG MS51021-84 (96906)	C	EA	2	•	•	•	•		
N MOOZZ		GASKET, NEOPRENE: PILOT HOUSE MANHOLE COVER 145-4510932-5 (80064) MANUFACTURE FROM:	C	EA	2						
N PCOZZ	5330-261-5761	GASKET, NEOPRENE, 1/8 IN. THK, AS REQUIRED HNG156 (81348)		SH		•	•	•	•		
N PAOZZ	5305-960-8588	SCREW, MACHINE: WINCH HYDRAULIC HAND PUMP HANDLE CLIP, ROUNDHEAD, NO. 6-32 THD SIZE, 11/16 IN. LG 10582180-61 (18876)	C	EA	2	•	•	•	•		
N PAOZZ	5310-804-0053	NUT, PLAIN, HEXAGON: WINCH HYDRAULIC PUMP HANDLE CLIP MTG, NO. 6-32 THD SIZE 8634223 (19200)	C	EA	2	•	•	•	•		
N PAOZZ	5340-003-4128	CLIP, HOLDER: WINCH HYDRAULIC HAND PUMP HANDLE, NO. 1 F10502 (46576)	C	EA	2	•	•	•	•		
N MOOZZ		PLATE, ACCESS HOLE COVER 145-4510914P15 (80064)	C	EA	1						
N MOOZZ		LUG, GATE FREEING PORT GATE 145-4510914530 (80064)	C	EA	8						

	(1) SMR CODE	(2) FEDERAL STOCK NUMBER	(3) DESCRIPTION REF NUMBER & MFR CODE	USABLE ON CODE	(4) UNIT OF MEAS	(5) QTY INC IN UNIT	(6) 15-DAY ORGANIZATIONAL MAINTENANCE ALW (a) 1-5	(b) 6-20	(c) 21-50	(d) 51-100	(7) ILLUSTRATION (a) FIG. NO.	(b) ITEM NO.
N	MHOZZ		PLATE, ACCESS HOLD COVER: BOW PORT 145-4510914719 (80064)	C	EA	1						
N	PAOZZ	5730-701-9364	PLUG, PIPE: PIPE FENDERS ON SIDES, 3/4-14 THD SIZE 7019364 (19207)	C	EA	20	•	•	•	•		
N	MDOZZ		GASKET, NEOPRENE: LAZARETTE HATCH COVER, FUEL TANK REMOVAL 145-4510931-51 (80064) MANUFACTURE FROM:	C	EA	1						
N	PCOZZ	5330-261-5761	GASKET, NEOPRENE, 1/8 IN., AS REQUIRED MMG156 (81348)		FT		•	•	•	•		
N	MDOZZ		GASKET, NEOPRENE: FUEL TANK INSPECTION PLATE 145-4510923-98 (80064) MANUFACTURE FROM:	C	EA	4						
N	PCOZZ	5330-261-5761	GASKET, NEOPRENE, 1/8 IN., AS REQUIRED MAG156 (81348)		FT		•	•	•	•		
N	PAOZZ	5330-133-4576	SEAL, THREAD PARKER: FUEL TANK STUDS 75001-2 (93061)	C	EA	64	•	•	•	•		
N	XDOZZ		ELBOW, PIPE: SEA CHEST OUTLET, BRASS, 45 DEG, 2-11 1/2 THD SIZE 3409A (63686)	C	EA	2						
N	MDOZZ		PLYWOOD: ENGINE ROOM LOCKER 145-4510923-69 (80064) MANUFACTURE FROM:	C	EA	2						
N	PAOZZ	5530-129-2177	PLYWOOD, 5/8 IN. THK, AS REQUIRED NNP530 (81348)		SH		•	•	•	•		
N	MDOZZ		PLYWOOD: ENGINE ROOM LOCKER 145-4510923-70 (80064) MANUFACTURE FROM:	C	EA	2						
N	PAOZZ	5530-129-2177	PLYWOOD, 5/8 IN. THK, AS REQUIRED NNP530 (81348)		SH		•	•	•	•		
N	MDOZZ		PLYWOOD: ENGINE ROOM LOCKER 145-4510923-71 (80064) MANUFACTURE FROM:	C	EA	1						
N	PAOZZ	5530-129-2177	PLYWOOD, 5/8 IN. THK, AS REQUIRED NNP530 (81348)		SH		•	•	•	•		
N	MDOZZ		PLYWOOD: ENGINE LOCKER ROOM 145-4510923-72 (51563) MANUFACTURE FROM:	C	EA	1						
N	PAOZZ	5530-129-2177	PLYWOOD, 5/8 IN. THK, AS REQUIRED NNP530 (81348)		FT		•	•	•	•		
N	PAOZZ	5340-946-2187	HASP, BRIGHT ZINC PLATE: ENGINE ROOM LOCKER 915K (87541)	C	EA	1	•	•	•	•		
N	PAOZZ	5340-231-2642	HINGE, STEEL: ENGINE ROOM LOCKER MS27956-22 (96906)	C	EA	2	•	•	•	•		
N	PAOZZ	5305-068-0502	SCREW, CAP, HEXAGON HEAD: ENGINE ROOM STOWAGE BOX SECURING, 1/4-20 THD SIZE, 3/4 IN. LG MS90725-6 (96906)	C	EA	4	•	•	•	•		
N	PAOZZ	5310-761-6882	NUT, PLAIN, HEXAGON: ENGINE ROOM STOWAGE BOX SECURING, 1/4-20 THD SIZE MS51967-2 (96906)	C	EA	4	•	•	•	•		
N	PAOZZ	5310-823-8304	WASHER, FLAT: ENGINE ROOM STOWAGE BOX SECURING MS27183-9 (96906)	C	EA	4	•	•	•	•		
N	PAOZZ	5305-637-1149	SCREW, CAP, HEXAGON HEAD: PROP STOWAGE, 1/2-13 THD SIZE, 7 3/4 IN. LG MILS933 (81349)	C	EA	2	•	•	•	•		

	(1) SMR CODE	(2) FEDERAL STOCK NUMBER	(3) DESCRIPTION REF NUMBER & MFR CODE	USABLE ON CODE	(4) UNIT OF MEAS	(5) QTY INC IN UNIT	(6) 15-DAY ORGANIZATIONAL MAINTENANCE ALW (a) 1-5	(b) 6-20	(c) 21-50	(d) 51-100	(7) ILLUSTRATION (a) FIG. NO.	(b) ITEM NO.
N	PACZZ	5310-768-0318	NUT, PLAIN, HEXAGON: PROP STOWAGE, 1/2-13 THD SIZE MS51967-14 (96906)	C	EA	2	•	•	•	•		
N	PACZZ	5310-579-3603	WASHER: PROP STOWAGE, 9/16 IN. ID, 2.125 IN. OD, .134 IN. THK A46502 (24617)	C	EA	2	•	•	•	•		
N	PACZZ	5305-068-0502	SCREW, CAP, HEXAGON HEAD: EMERGENCY TILLER STOWAGE, 1/4-20 THD SIZE, 3/4 IN. LG MS90725-6 (96906)	C	EA	1	•	•	•	•		
N	PACZZ	5310-761-6882	NUT, PLAIN, HEXAGON: EMERGENCY TILLER STOWAGE, 1/4-20 THD SIZE MS51967-2 (96906)	C	EA	1	•	•	•	•		
N	XDOZZ		BRACKET, FIRE EXTINGUISHER 108110 (01317)	C	EA	4						
N	PAOZZ	5310-913-8881	NUT, PLAIN, HEXAGON: MAST LOWER SHEAVE PIN, 3/8-16 THD SIZE MS51971-3 (96906)	C	EA	1	•	•	•	•		
N	MOOZZ		WASHER: MAST HEEL PIN 125-4510528-45 (80064) MANUFACTURE FROM:	C	EA	4						
N	PAOZZ	9515-235-7613	SHEET, STAINLESS STEEL, 1/8 IN. THK, AS REQUIRED MIL35059 (81349)		SH		•	•	•	•		
N	PAOZZ	5305-782-9494	SCREW, CAP, HEXAGON HEAD: MAST COLLAR RETAINER, 1/2-13 THD SIZE, 1 3/4 IN. LG MS90725-114 (96906)	C	EA	4	•	•	•	•		
N	PAOZZ	5310-899-9151	NUT, PLAIN, HEXAGON: MAST COLLAR RETAINING MS51967-13 (96906)	C	EA	4	•	•	•	•		
N	PAOZZ	5305-044-4153	SCREW, CAP, HEXAGON HEAD: 1/2-13 THD SIZE, 1 IN. LG MS90725-109 (96906)	C	EA	150	•	•	•	•		
N	PACZZ	5305-719-3997	SCREW, CAP, HEXAGON HEAD: WINCH OIL PLUG DRAIN COVER MS35307-343 (96906)	C	EA	2	•	•	•	•		
N	PAOZZ	5310-950-1309	WASHER: RAMP LEAD WIRE SHEAVE, 1 1/2 IN. OD, 3 1/4 IN. OD, .165 IN. THK MS27183-31 (96906)	C	EA	2	•	•	•	•		
N	PAOZZ	5305-527-4965	SCREW, CAP, HEXAGON HEAD: PILOT CONTROL MANHOLE COVER MS35309-60 (96906)	C	EA	40	•	•	•	•		
N	PAOZZ	5310-913-8881	NUT, PLAIN, HEXAGON: PILOT CONTROL MANHOLE COVER, 3/8-16 THD SIZE MS51971-3 (96906)	C	EA	40	•	•	•	•		
N	PAOZZ	5306-275-9972	BOLT, MACHINE: HORN MTG, 3/8-16 THD SIZE, 1 IN. LG A3870118-7360 (10001)	C	EA	3	•	•	•	•		
N	PAOZZ	5310-732-0558	NUT, PLAIN, HEXAGON: HORN MTG, 3/8-16 THD SIZE MS51967-8 (96906)	C	EA	3	•	•	•	•		
N	MOOZZ		STRIP FIRING: ENGINE ROOM LOCKER CORNER BRACE 145-4510923-82 (80064) MANUFACTURE FROM:	C	EA	1						
N	PAOZZ	5510-273-6764	LUMBER, SOFTWOOD, AS REQUIRED NAVL751 (81348)		FT		•	•	•	•		
N	XDOZZ		BOX, STOWAGE: EAR PROTECTORS IN PILOT STAND 2924-1 (49516)	C	EA	1						

(1) SMR CODE	(2) FEDERAL STOCK NUMBER	(3) DESCRIPTION REF NUMBER & MFR CODE	USABLE ON CODE	(4) UNIT OF MEAS	(5) QTY INC IN UNIT	(6) 15-DAY ORGANIZATIONAL MAINTENANCE ALW (a) 1-5	(b) 6-20	(c) 21-50	(d) 51-100	(7) ILLUSTRATION (a) FIG. NO.	(b) ITEM NO.
N PAOZZ	4030-185-0482	SHACKLE, ANCHOR: MAST HOIST LINE RRC271TYPE4CLASS1 (81348)	C	EA	1	•	•	•	•		
N MOOZZ		CHAIN, SINGLE JACK: STERN MAST 125-4510928-62 (80064) MANUFACTURE FROM:	C	EA	4						
N PAOZZ		CHAIN, SINGLE JACK, 16 GAGE, AS REQUIRED RRC271CLASS7 (81348)	C	FT		•	•	•	•		
N MOOZZ		WIRE, 10 GAGE: NAME TAGS SECURING 145-4510936M1 (80064) MANUFACTURE FROM:	C	EA	10						
N PAOZZ	9525-287-8396	WIRE, COPPER, 10 GAGE, AS REQUIRED QQW321CC4POSITION7ANNEALED (81348)		FT		•	•	•	•		
N PAOZZ	4730-187-0840	CONNECTOR, MALE: ENGINE OIL PRESSURE GAGE PILOT HOUSE C5205X4 (79470)	C	EA	14	•	•	•	•		
N XDOZZ		NUT, FLARE: ENGINE OIL PRESSURE GAGE, PILOT HOUSE C5115X4 (79470)	C	EA	36						
N PAOZZ	4730-804-1923	TEE, UNION: ENGINE OIL PRESSURE GAGE MS24402-4 (96906)	C	EA	4	•	•	•	•		
N PAOZZ	4730-684-7531	CONNECTOR, FEMALE: ENGINE GEARBOX OIL PRESSURE GAGE C5255X4 (79470)	C	EA	6	•	•	•	•		
N MOOZZ		TUBE, COPPER: ENGINE AND GEARBOX OIL PRESSURE LINE 145-4510932-43 (80064) MANUFACTURE FROM:	C	EA	50						
N PAOZZ	4710-277-6108	TUBE, COPPER, 1/4 IN. OD, AS REQUIRED WWT799TYPEX (81348)		FT		•	•	•	•		
N PAOZZ	4730-580-7417	BUSHING: ENGINE GEARBOX GAGE, ENGINE ROOM C3109X8X4 (79470)	C	EA	4	•	•	•	•		
N PAOZZ	4730-811-1740	CONNECTOR, MALE: ENGINE GEARBOX OIL LINE C5205X8X8 (79470)	C	EA	4	•	•	•	•		
N XDOZZ		TEE, RUN: ENGINE GEARBOX OIL LINE SF15861-8-12 (98441)	C	EA	4						
N PAOZZ	4730-618-3410	CONNECTOR, MALE: ENGINE GEARBOX OIL LINE ADP686 (93234)	C	EA	4	•	•	•	•		
N PACZZ	5305-478-0273	SCREW, MACHINE: SIDE PLATE FORWARD WELL DECK, 3/8-16 THD SIZE, 1/2 IN. LG MS35307-355 (96906)	C	EA	44	•	•	•	•		
N PAOZZ	5305-281-5665	SCREW, MACHINE: WELL DECK LIGHTS MTG, ROUNDHEAD, 1/4-20 THD SIZE, 1 IN. LG 34-421 (35301)	C	EA	4	•	•	•	•		
N PAOZZ	5310-761-6882	NUT, PLAIN, HEXAGON: WELL DECK LIGHTS, 1/4-20 THD SIZE MS51967-2 (86896)	C	EA	4	•	•	•	•		
N PAOZZ	5305-792-9495	SCREW, CAP, HEXAGON HEAD: FUEL TANK MTG, 1/2-13 THD SIZE, 1 1/4 IN. LG MS90725-111 (96906)	C	EA	16	•	•	•	•		
N PAOZZ	5310-768-0318	NUT, PLAIN, HEXAGON: FUEL TANK MTG, 1/2-13 THD SIZE MS51967-14 (96906)	C	EA	16	•	•	•	•		
N PAOZZ	5310-809-5997	WASHER, FLAT: FUEL TANK MTG, 1/2 IN. SCREW SIZE MS27183-17 (96906)	C	EA	16	•	•	•	•		
N PAOZZ	5310-149-9116	WASHER: FUEL TANK INSPECTION PLATE MS20002C8 (96906)	C	EA	64	•	•	•	•		
N PAOZZ	5307-134-3860	BOLT, STUD: FUEL TANK INSPECTION PLATE, 1/2-13 THD SIZE, 1 3/4 IN. LG 145-4510923-106 (80064)	C	EA	64	•	•	•	•		

	(1) SMR CODE	(2) FEDERAL STOCK NUMBER	(3) DESCRIPTION REF NUMBER & MFR CODE	USABLE ON CODE	(4) UNIT OF MEAS	(5) QTY INC IN UNIT	(6) 15-DAY ORGANIZATIONAL MAINTENANCE ALW (a) 1-5	(b) 6-20	(c) 21-50	(d) 51-100	(7) ILLUSTRATION (a) FIG. NO.	(b) ITEM NO.
N	PAOZZ	5310-768-0318	NUT, PLAIN, HEXAGON: FUEL TANK INSPECTION PLATE MS51967-14 (96906)	C	EA	64	•	•	•	•		
N	PCOZZ	8040-446-8473	SEALANT LOCTITE: FUEL TANK INSPECTION PLATES BOLTS 95-204630-601 (58854)	C	PT	1	•	•	•	•		
N	PACZZ	5305-717-5467	SCREW, CAP, HEXAGON HEAD: BELL BRACKET, 3/8-16 THD SIZE, 1 1/4 IN. LG MS35307-362 (96906)	C	EA	4	•	•	•	•		
N	PACZZ	5310-913-8881	NUT, PLAIN, HEXAGON: BELL BRACKET, 3/8-16 THD SIZE MS51971-3 (96906)	C	EA	4	•	•	•	•		
N	PACZZ	5310-984-7042	WASHER, LOCK: BELL BRACKET, 3/8 IN. SCREW SIZE MS35338-141 (96906)	C	EA	4	•	•	•	•		
N	PAOZZ	5305-007-6069	SCREW, CAP, HEXAGON HEAD: RAMP WIRE END SECURING PIN, 1 1/8-12 THD SIZE, 1 1/2 IN. LG MS35308-556 (96906)	C	EA	1	•	•	•	•		
N	PAOZZ	5315-241-7332	PIN, COTTER: RAMP WIRE END SECURING BOLT, 1/8 IN. DIA, 1 1/2 IN. LG MS24665-374 (96906)	C	EA	1	•	•	•	•		
N	PAOZZ	5310-401-5175	NUT, CASTELLATED: RAMP WIRE END SECURING BOLT, 1 1/8-12 THD SIZE MS35692-1824 (81348)	C	EA	1	•	•	•	•		
N	PAOZZ	4030-805-5806	HOOK, CHAIN: LIFELINE, 3/8 IN.	C	EA	10	•	•	•	•		
N	MOOZZ		CHAIN, CLOSED LINK 145-4510934-72 (80064) MANUFACTURE FROM:	C	EA	5						
N	PAOZZ	4010-988-3181	CHAIN, 1/4 IN., CLOSED LINK, 22 IN. REQUIRED FOR EA CHAIN RRC27TYPE1GRADECCLASS1 (81348)		FT		•	•	•	•		
N	PAOZZ	5305-021-3801	SCREW, CAP, HEXAGON HEAD: ENGINE ROOM HATCH COVER, 1/2-13 THD SIZE, 1 1/4 IN. LG MS35307-411 (96906)	C	EA	7	•	•	•	•		
N	PAOZZ	5310-614-3506	WASHER, FLAT: ENGINE ROOM HATCH COVER, 1/2 IN. SCREW SIZE MS15795-817 (96906)		EA	7	•	•	•	•		
N	PAOZZ	6145-260-8795	CABLE, ELECTRIC: NO. 16 AWG MILC915TYPEDHOF3 (81349) (AS REQUIRED)		FT		•	•	•	•		
N	PAOZZ	5935-335-0469	PLUG, DOUBLE POLE, GROUNDED: 15 AMP, 125-250V M2726-50-001 (81349)	C	EA	1	•	•	•	•		
N	XDOZZ		TERMINAL, LUG: WIPER, MOTOR R8857-200 (59730)	C	EA	2						
N	PAOZZ	5340-792-0943	TY-RAP: ELECTRIC CABLE CLAMP TY33M (59730)	C	EA	3	•	•	•	•		
N	PAOZZ	5305-059-3662	SCREW, MACHINE: ELECTRIC CABLE CLAMP, NO. 10-32 THD SIZE, 7/8 IN. LG MS51958-66 (96906)	C	EA	3	•	•	•	•		
N	PAOZZ	5310-902-6676	LOCKNUT: ELECTRIC CABLE CLAMP, NO. 10-32 THD SIZE MS21083N3 (96906)	C	EA	3	•	•	•	•		
N	MOOZZ		GASKET, RAMP, SEAL 145-4510924A6 (80064) MANUFACTURE FROM:	C	EA	1						
N	PCOZZ	5330-845-1471	GASKET, SEAL, AS REQUIRED 5541TPEC (81527)		FT		•	•	•	•		
N	PAOZZ	4730-050-4203	FITTING, LUBRICATION: RAMP HINGE MS15001-1 (96906)	C	EA	14	•	•	•	•		
N	PAOZZ	5305-719-3997	SCREW, CAP, HEXAGON HEAD: RAMP PLATES, 1/4-20 THD SIZE, 1 IN. LG MS35307-303 (96906)	C	EA	68	•	•	•	•		
N	PAOZZ	5305-724-5813	SCREW, SOCKET SET: HINGE PIN COLLAR, 3/8-24 THD SIZE, 3/8 IN. LG MS51964-66 (96906)	C	EA	8	•	•	•	•		

(1) SMR CODE	(2) FEDERAL STOCK NUMBER	(3) DESCRIPTION REF NUMBER & MFR CODE	USABLE ON CODE	(4) UNIT OF MEAS	(5) QTY INC IN UNIT	(6) 15-DAY ORGANIZATIONAL MAINTENANCE ALW (a) 1-5	(b) 6-20	(c) 21-50	(d) 51-100	(7) ILLUSTRATION (a) FIG. NO.	(b) ITEM NO.
PAOZZ	4730-864-6219	SWIVEL: MALE TO FEMALE, LUBRICATION HOSE 7253-73 (24161)	C	EA	2	*	*	*	*		
PAOZZ	5306-922-5275	BOLT, FLANGE FL1-10-10P10 (62963)	C	EA	2	*	*	*	*		
		GROUP 85 - PIPING BILGE									
PAOZZ	4730-908-6292	CLAMP, HOSE: 3 1/2 IN. MS35842-14 (96906)	AB	EA	120	*	*	*	*	159	1
MOOZZ		HOSE, RUBBER: 2 7/8 IN. ID MMC49F8 (98042) MANUFACTURE FROM:	AB	EA	1					159	2
PCOZZ	4720-288-9756	HOSE, AS REQUIRED		FT		*	*	*	*	159	
PAOZZ	4730-909-8627	CLAMP, HOSE: 2 3/4 IN. MS35842-13 (96906)	AB	EA	18	*	*	*	*	159	3
MOOZZ		HOSE, RUBBER: 1 5/8 IN. ID MMC49F9 (98042) MANUFACTURE FROM:	A	EA	1					159	4
PCOZZ	4720-235-4127	HOSE, AS REQUIRED		FT		*	*	*	*	159	
MOOZZ		HOSE, RUBBER: 1 7/8 IN. ID MMC49F10 (98042) MANUFACTURE FROM:	A	EA	1					159	5
PCOZZ	4720-235-4126	HOSE, AS REQUIRED		FT		*	*	*	*	159	
MOOZZ		HOSE, RUBBER: 2 1/8 IN. ID MMC49F11 (98042) MANUFACTURE FROM:	A	EA	1					159	6
PCOZZ	4720-235-4122	HOSE, AS REQUIRED		FT		*	*	*	*	159	
MOOZZ		HOSE, RUBBER: 2 3/8 IN. ID MMC49F12 (98042) MANUFACTURE FROM:	AB	EA	1					159	7
PCOZZ	4720-235-4121	HOSE, AS REQUIRED		FT		*	*	*	*	159	
MOOZZ		HOSE, RUBBER: 2 5/8 IN. ID MMC49F13 (98042) MANUFACTURE FROM:	A	EA	1					159	8
PCOZZ	4720-287-4837	HOSE, AS REQUIRED		FT		*	*	*	*	159	
PAOZZ	4820-555-9761	COCK, DRAIN: BILGE 702 (14959)	A	EA	1	*	*	*	*	159	9
XDOZZ		VALVE, CHECK 130311-2 (14959)	A	EA	2					159	10
XDOZZ		VALVE, CHECK 13032 (14959)	A	EA	1					159	11
XDOZZ		VALVE, GATE: 125 LB, BRONZE 132011-2 (14959)	A	EA	2					159	12
XDOZZ		VALVE, GATE: 125 LB, BRONZE 13202 (14959)	A	EA	3					159	13
XDOZZ		VALVE, GATE: 125 LB, BRONZE 132021-2 (14959)	A	EA	1					159	14
XDOZZ		VALVE, GLOBE: 125 LB, BRONZE 121-2 (14959)	A	EA	10					159	15
PCCZZ	3030-528-4616	BELT, V: PUMP DRIVE 3580 (24161)	A	EA	2	*	*	*	*	159	16
PCCZZ	3030-528-4627	BELT, V: PUMP DRIVE 3720 (24161)	A	EA	1	*	*	*	*	159	17
PAOZZ	4320-251-2139	STRAINER AND CHECK VALVE ASSEMBLY 2225A (76122)		EA	8	*	*	*	*	159	18

(1) SMR CODE	(2) FEDERAL STOCK NUMBER	(3) DESCRIPTION REF NUMBER & MFR CODE	USABLE ON CODE	(4) UNIT OF MEAS	(5) QTY INC IN UNIT	(6) 15-DAY ORGANIZATIONAL MAINTENANCE ALW (a) 1-5	(b) 6-20	(c) 21-50	(d) 51-100	(7) ILLUSTRATION (a) FIG. NO.	(b) ITEM NO.
XAOZZ		CAP 2226A (76122)		EA	1					159	
XAOZZ		BASE 2121 (76122)		EA	1					159	
PCOZZ	5330-236-3718	SEAL, NEOPRENE: CAP 2103A (76122)		EA	1	•	•	•	•	159	
PAOZZ	4320-922-0226	PLATE: LARGE 2105A (76122)		EA	1	•	•	•	•	159	
PAOZZ	4320-922-0827	PLATE: SMALL 2104A (76122)		EA	1	•	•	•	•	159	
PAOZZ		BUSHING 2223 (76122)		EA	1	•	•	•	•	159	
PACZZ	4730-908-6293	CLAMP, HOSE: 4 1/4 IN. MS35842-15 (96906)	AB	EA	8	•	•	•	•	160	1
HDOZZ		HOSE, RUBBER: 2 7/8 IN., BILGE PIPING 36-10-210 (26571) MANUFACTURE FROM:	AB	EA	1					160	2
PCOZZ	4720-288-9756	HOSE, AS REQUIRED		FT		•	•	•	•	160	
PACZZ	4730-909-8627	CLAMP, HOSE: 2 3/4 IN. MS35842-13 (96906)	AB	EA	8	•	•	•	•	160	3
HDOZZ		HOSE, RUBBER: 1 7/8 IN. ID 37-22-210 (26571) MANUFACTURE FROM:	AB	EA	1					160	4
PCOZZ	4720-235-4126	HOSE, AS REQUIRED		FT		•	•	•	•	160	
PACZZ	4730-908-6292	CLAMP, HOSE: 3 1/2 IN. MS35842-14 (96906)	AB	EA	4	•	•	•	•	160	5
HDOZZ		HOSE, RUBBER 38858-210 (26571) MANUFACTURE FROM:	B	EA	1					160	6
PCOZZ	4720-451-4333	HOSE, AS REQUIRED		FT		•	•	•	•	160	
HDOZZ		HOSE, RUBBER: 2 1/8 IN. 38871-210 (26571) MANUFACTURE FROM:	B	EA	1					160	7
PCOZZ	4720-837-1466	HOSE, AS REQUIRED		FT		•	•	•	•	160	
HDOZZ		GASKET 38C13C210 (26571) MANUFACTURE FROM:	AB	EA	1					160	8
PCOZZ	5330-261-5760	GASKET, AS REQUIRED		FT		•	•	•	•	160	
N PACZZ	4730-909-8627	CLAMP, HOSE: 2 IN. MS35842-13 (96906)	C	EA	8	•	•	•	•	161	1
N HDOZZ		HOSE, WATER, RUBBER: 2 5/8 IN. ID 508-4510948-147 (80009) MANUFACTURE FROM:	C	EA	1					161	2
N PCOZZ	4720-807-4837	HOSE, FLEXIBLE, 2 5/8 IN., AS REQUIRED ZZHA8TYPE3GRADEBCLASS2ORS (81348)		FT		•	•	•	•	161	
N HDOZZ		TUBE, COPPER: TYPE K, 2 1/8 IN. OD 508-4510948-77 (80009) MANUFACTURE FROM:	C	EA	1					161	3
N PAOZZ	4710-278-2222	TUBE, COPPER, 2 1/8 IN. OD, AS REQUIRED WWT799TYPEXCLASS2 (81348)		FT		•	•	•	•	161	
N PAOZZ	4820-287-3098	VALVE, CHECK: 2 IN. 34-2 (14959)	C	EA	1	•	•	•	•	161	4
N XDOZZ		ELBOW: COPPER, 45 DEG, 2 IN. 606-2 (14959)	C	EA	2					161	5

(1) SMR CODE	(2) FEDERAL STOCK NUMBER	(3) DESCRIPTION REF NUMBER & MFR CODE	USABLE ON CODE	(4) UNIT OF MEAS	(5) QTY INC IN UNIT	(6) 15-DAY ORGANIZATIONAL MAINTENANCE ALW (a) 1-5	(b) 6-20	(c) 21-50	(d) 51-100	(7) ILLUSTRATION (a) FIG. NO.	(b) ITEM NO.
N PAOZZ	5310-761-6882	NUT, PLAIN, HEXAGON: BILGE LINE, 1/4-20 THD SIZE MS51967-2 (96906)	C	EA	16	•	•	•	•	161	6
N PAOZZ	5310-582-5965	WASHER, LOCK: BILGE LINE, STEEL, 1/4 IN. SCREW SIZE MS35338-44 (96906)	C	EA	16	•	•	•	•	161	7
N PAOZZ	5306-672-1924	U-BOLT: BILGE LINE, 1/4 IN. 16131 (05748)	C	EA	2	•	•	•	•	161	8
N PAOZZ	4730-794-6797	UNION, COPPER: TUBE A11214 (41967)	C	EA	2	•	•	•	•	161	9
N PAOZZ	4820-822-0651	VALVE, GATE: BILGE LINE, 2 IN. 428-2 (14959)	C	EA	1	•	•	•	•	161	10
N XDOZZ		ELBOW: 2 IN., 90 DEG, L.R. SOLID, TYPE C-C PD15-242 (74163)	C	EA	1					161	11
N PAOZZ	4820-554-8391	DRAIN, COCK, SCREWED: BRONZE, 1/2 IN. 1121 (48422)	C	EA	1	•	•	•	•	161	12
N XDOZZ		TEE, REDUCING, CAST SOLID: TYPE C-C-F PD10-480-2X2X1-2IN (74163)	C	EA	1					161	13
N MOOZZ		TUBE, COPPER: 2 1/8 IN. OD, 4 IN. LG 508-4510548-166 (80064) MANUFACTURE FROM:	C	EA	3					161	14
N PAOZZ	4710-278-2222	TUBE, COPPER: 2 1/8 IN. OD AS REQUIRED WWT799TYPEKCLASS2 (81348)		FT		•	•	•	•	161	
N MOOZZ		HOSE, WATER, RUBBER: 2 1/8 IN. ID, 12 IN. LG 508-4510548M65 (80064) MANUFACTURE FROM:	C	EA	1					161	15
N PCOZZ	4720-235-4122	HOSE, RUBBER, 2 1/8 IN. ID, AS REQUIRED ZZH428TYPE2GRADEBCLASS1 (81348)		FT		•	•	•	•	161	
N PAOZZ	4730-818-5197	ELBOW: 2 IN., 90 DEG SLIP RING PD15-235-2IN (74163)	C	EA	5	•	•	•	•	161	16
N XDOZZ		ADAPTER, CAST SOLID: TYPE C-M, 2 IN. PD10-101 (74163)		EA	1					161	17
N PACZZ	4730-908-3193	CLAMP, HOSE: 1 1/2 IN. MS35842-12 (96906)	C	EA	4	•	•	•	•	161	18
N MOOZZ		HOSE, DISCHARGE, RUBBER: 1 5/8 IN. ID 508-4510548-95 (80064) MANUFACTURE FROM:	C	EA	2					161	19
N PCOZZ	4720-235-4127	HOSE, RUBBER, 1 5/8 IN. OD, AS REQUIRED ZZH428TYPE2GRADEBCLASS10R2 (81348)		FT		•	•	•	•	161	
N MOOZZ		TUBE, COPPER: 1 5/8 IN. OD 508-4510958-154 (80064) MANUFACTURE FROM:	C	EA	1					161	20
N PAOZZ	4710-946-1003	TUBE, COPPER, 1 5/8 IN. OD, AS REQUIRED WWT799TYPEKCLASS1 (81348)		FT		•	•	•	•	161	
N PAOZZ	4730-250-7953	ELBOW, STREET: 90 DEG, LG R FITTING PD15-272-1-1-2IN (74163)	C	EA	2	•	•	•	•	161	21

	(1) SMR CODE	(2) FEDERAL STOCK NUMBER	(3) DESCRIPTION REF NUMBER & MFR CODE	USABLE ON CODE	(4) UNIT OF MEAS	(5) QTY INC IN UNIT	(6) 15-DAY ORGANIZATIONAL MAINTENANCE ALW (a) 1-5	(b) 6-20	(c) 21-50	(d) 51-100	(7) ILLUSTRATION (a) FIG. NO.	(b) ITEM NO.
N	MOOZZ		TUBE, COPPER: TYPE K, 1 5/8 IN. OD 508-4510948-107 (80064) MANUFACTURE FROM:	C	EA	1					161	22
N	PAOZZ	4710-846-1003	TUBE, COPPER, 1 5/8 IN. OD, AS REQUIRED WWT799TYPEKCLASS1 (81348)		FT		•	•	•	•	161	
N	XDOZZ		ADAPTER, MALE: COPPER, 1 1/2 IN. 604-1-1-2 (14959)	C	EA	6					161	23
N	PAOZZ		VALVE, CHECK: BRONZE, 1 1/2 IN. 34-1-1-2 (14959)	C	EA	2	•	•	•	•	161	24
N	MOOZZ		PIPE, SEAMLESS: 1 1/2 X 5 1/2 IN. LG, STEEL, SCHEDULE 80 508-4510948-116 (80064) MANUFACTURE FROM:	C	EA	2					161	25
N	PAOZZ	4710-277-5452	PIPE, 1 1/2 IN. STEEL, SEAMLESS, SCHEDULE 80 AS REQUIRED WWP404GRADEACLASSA53AERWXS (81348)		FT		•	•	•	•	161	
N	PAOZZ	5306-937-1312	U-BOLT: BILGE LINE, 1 1/2 IN. 8724752 (19207)	C	EA	4	•	•	•	•	161	27
N	MOOZZ		TUBE, COPPER: TYPE K, 1 5/8 IN. OD 508-4510948-107 (80064) MANUFACTURE FROM:	C	EA	1					161	28
N	PAOZZ	4710-846-1003	TUBE, COPPER, 1 5/8 IN. OD, AS REQUIRED WWT799TYPECLASS1 (81348)		FT		•	•	•	•	161	
N	PAOZZ		VALVE, GATE: 1 1/2 IN. 428-1-1-2 (14959)		EA	2	•	•	•	•	161	29
N	PAOZZ	4820-554-8391	DRAIN, COCK: 1/2 IN. SCREWED, BRONZE, 1/2 IN. 1121 (48422)	C	EA	2	•	•	•	•	161	30
N	XDOZZ		TEE, REDUCING: CAST SOLID, 1 1/2 X 1 1/2 X 1/2 IN. PD10-480 (74163)	C	EA	2					161	31
N	XDOZZ		PLUG, SQUARE HEAD: PIPE, 2 1/2 IN. 3430 (63686)	C	EA	1					162	1
N	PACZZ	4730-908-3193	CLAMP, HOSE: 1 1/2 IN. MS35842-12 (96906)	C	EA	4	•	•	•	•	162	2
N	HOOZZ		HOSE, WATER, RUBBER: 1 5/8 IN. ID, 5 IN. LG 503-4510948-156 (80064) MANUFACTURE FROM:	C	EA	2					162	3
N	PCOZZ	4720-235-4127	HOSE, RUBBER, 1 5/8 IN. ID, AS REQUIRED		FT		•	•	•	•	162	
N	XDOZZ		CLAMP, PIPE: EXTENSION SPLIT, 1 1/2 IN. 138 (26403)	C	EA	32					162	4
N	MOOZZ		PIPE: SCHEDULE 40, GALVANIZED, 1/4 IN. 508-4510948-25 (80064) MANUFACTURE FROM:	C	EA	1					162	5
N	PAOZZ	4710-277-5475	PIPE, 1/4 IN., SCHEDULE 40, ASIM-A53, AS REQUIRED WWP404GRADEACLASSA53AERW (81348)		FT		•	•	•	•	162	
N	MOOZZ		TUBE, COPPER: 1 5/8 IN. OD 508-4510948-152 (80064) MANUFACTURE FROM:	C	EA	1					162	6
N	PAOZZ	4710-846-1003	TUBE, COPPER, 1 5/8 IN., AS REQUIRED WWT799KCLASS1 (81348)		FT		•	•	•	•	162	

(1) SMR CODE	(2) FEDERAL STOCK NUMBER	(3) DESCRIPTION REF NUMBER & MFR CODE	USABLE ON CODE	(4) UNIT OF MEAS	(5) QTY INC IN UNIT	(6) 15-DAY ORGANIZATIONAL MAINTENANCE ALW (a) 1-5	(b) 6-20	(c) 21-50	(d) 51-100	(7) ILLUSTRATION (a) FIG. NO.	(b) ITEM NO.
N PAOZZ	4730-754-6797	UNION, COPPER TUBE A11214 (41967)	C	EA	2	•	•	•	•	162	7
N XDOZZ		DRAIN, DECK 60-160 (59158)	C	EA	2					162	8
N MOOZZ		TUBE, COPPER: 1 5/8 IN. OD 508-45109A8-154 (80064) MANUFACTURE FROM:	C	EA	1					162	9
N PAOZZ	4710-846-1003	TUBE, COPPER, 1 5/8 IN. OD, AS REQUIRED WWT799TYPEXCLASS1 (81348)		FT		•	•	•	•	162	
N XDOZZ		ADAPTER: 1 1/2 X 2 IN. W117B (41967)	C	EA	2					162	10
N PAOZZ		CROSS: NO. 125, SCREWED, 2 1/2 X 2 1/2 X 2 X 2 IN. 3413 (63686)	C	EA	1	•	•	•	•	162	11
N MOOZZ		TUBE, COPPER: 1 5/8 IN. OD 508-45109A8-153 (80064) MANUFACTURE FROM:	C	EA	1					162	12
N PAOZZ	4710-846-1003	TUBE, COPPER, 1 5/8 IN. OD, AS REQUIRED WWT799TYPEXCLASS1 (81348)		FT		•	•	•	•	162	
N PACZZ	4730-908-3193	CLAMP, HOSE MS35842-12 (96906)	C	EA	4	•	•	•	•	162	13
N MOOZZ		HOSE, FLEX: 7/8 IN ID, 24 IN. LG 245-45109A6F50 (80064) MANUFACTURE FROM:	C	EA	3					162	14
N PAOZZ	4720-230-6526	HOSE, FLEX, 7/8 IN. ID, AS REQUIRED ZZHA28TYPE1GRADE (81348)		FT		•	•	•	•	162	
N MOOZZ		PIPE, COPPER 245-45109A6P9 (80064) MANUFACTURE FROM:	C	EA	1					162	15
N PAOZZ	4710-277-6101	PIPE, COPPER, AS REQUIRED		FT		•	•	•	•	162	
N PAOZZ	4730-943-0458	ELBOW: 90 DEG, 1/2 IN. 3651 (63686)	C	EA	1	•	•	•	•	162	16
N MOOZZ		PIPE, BRASS 245-45109A6P14 (80064) MANUFACTURE FROM:	C	EA	1					162	17
N PAOZZ	4710-289-2851	PIPE, BRASS, 1/2 IN., AS REQUIRED		FT		•	•	•	•	162	
N MOOZZ		PIPE, RED, BRASS: 2 3/8 IN. OD, 3 FT LG 508-45109A8-104 (80064) MANUFACTURE FROM:	C	EA	1					162	18
N PAOZZ		PIPE, RED, BRASS, 2 3/8 IN. OD, AS REQUIRED WWP351SPECCLASS1 (81348)		FT		•	•	•	•	162	
N PAOZZ		ELBOW: 90 DEG, SCREWED, NO. 125 3405-2-1-21N (63686)	C	EA	1	•	•	•	•	162	19
N XDOZZ		NIPPLE, CLOSE PIPE: IPS, SCHEDULE 40 21NCLOSE (63686)	C	EA	4					162	20
N XDOZZ		TEE, REDUCING: SCREWED 3411-2X1-2X21N (63686)	C	EA	2					162	21
N PACZZ	4820-822-0651	VALVE, GATE: SCREWED, NO. 125 428-2 (14959)	C	EA	2	•	•	•	•	162	22
N PAOZZ	4730-845-4100	ADAPTER: COPPER TUBE PD15-101-21N (74163)	C	EA	1	•	•	•	•	162	23

(1) SMR CODE	(2) FEDERAL STOCK NUMBER	(3) DESCRIPTION REF NUMBER & MFR CODE	USABLE ON CODE	(4) UNIT OF MEAS	(5) QTY INC IN UNIT	(6) 15-DAY ORGANIZATIONAL MAINTENANCE ALW (a) 1-5	(b) 6-20	(c) 21-50	(d) 51-100	(7) ILLUSTRATION (a) FIG. NO.	(b) ITEM NO.
N MOOZZ		TUBE, COPPER 508-4510948-166 (80064) MANUFACTURE FROM:	C	EA	3					162	24
N PAOZZ	4710-278-2222	TUBE, COPPER, 2 1/8 IN. OD, AS REQUIRED		FT		•	•	•	•	162	
N PAOZZ		ELBOW: 90 DEG, SLIP RING, COPPER PD15-235-2-1-2IN (74163)	C	EA	3	•	•	•	•	162	25
N PACZZ	4730-908-3193	CLAMP, HOSE: 1 1/2 IN. MS35842-12 (96906)	C	EA	2	•	•	•	•	162	26
N MOOZZ		HOSE, WATER, RUBBER 508-4510948-165 (80064) MANUFACTURE FROM:	C	EA	1					162	27
N PCOZZ	4720-235-4122	HOSE, RUBBER, 2 1/8 IN. ID, AS REQUIRED ZZH428TYPE2GRADEBCLASS1 (81348)		FT		•	•	•	•	162	
N MOOZZ		TUBE, COPPER: 2 1/8 IN. OD 508-4510948-159 (80064) MANUFACTURE FROM:	C	EA	2					162	28
N PAOZZ	4710-278-2222	TUBE, COPPER, 2 1/8 IN. OD, AS REQUIRED		FT		•	•	•	•	162	
N PAOZZ	4730-722-3591	ADAPTER, COPPER: TUBE PD15101-2-1-2IN (74163)	C	EA	7	•	•	•	•	162	29
N PACZZ	4730-134-4222	CLAMP, HOSE: 2 1/2 IN. 52HS (66295)	C	EA	110	•	•	•	•	162	30
N MOOZZ		HOSE, WATER, RUBBER: 2 5/8 IN. ID 508-4510948-147 (80064) MANUFACTURE FROM:	C	EA	1					162	31
N PAOZZ	4720-287-4837	HOSE, FLEXIBLE: 2 5/8 IN. ID, AS REQUIRED ZZH428TYPE3GRADEBCLASS2ORS (81348)		FT		•	•	•	•	162	
N PAOZZ		COUPLING, COMPRESSION: 2 7/8 IN. 250-2-7-8IN (34749)	C	EA	1	•	•	•	•	162	32
N MOOZZ		TUBE, COPPER: 2 5/8 IN. OD, 10 IN. LG 508-4510948-173 (80064) MANUFACTURE FROM:	C	EA	1					162	33
N PAOZZ	4710-278-2223	TUBE, COPPER, 2 5/8 IN. OD, AS REQUIRED WWT799TYPEKFORM1 (81348)		FT		•	•	•	•	162	
N MOOZZ		TUBE, COPPER: 2 5/8 IN. OD, 12 IN. LG 508-4510948-174 (80064) MANUFACTURE FROM:	C	EA	1					162	34
N PAOZZ	4710-278-2223	TUBE, COPPER, 2 5/8 IN. OD, AS REQUIRED WWP799TYPEKFORM1 (81348)		FT		•	•	•	•	162	
N MOOZZ		TUBE, COPPER: 2 5/8 IN. OD 508-4510948-144 (80064) MANUFACTURE FROM:	C	EA	2					162	35
N PAOZZ	4710-278-2223	TUBE, COPPER, 2 5/8 IN. OD, AS REQUIRED WWT799TYPEKFORM1 (81348)		FT		•	•	•	•	162	
N PAOZZ	4820-899-5730	VALVE, GLOBE: NO. 125, 2 1/2 IN. 1 (14959)	C	EA	8	•	•	•	•	162	36
N MOOZZ		TUBE, COPPER: 2 5/8 IN. OD 508-4510948-158 (80064) MANUFACTURE FROM:	C	EA	9					162	37
N PAOZZ	4710-278-2223	TUBE, COPPER, 2 5/8 IN. OD, AS REQUIRED		FT		•	•	•	•	162	

	(1) SMR CODE	(2) FEDERAL STOCK NUMBER	(3) DESCRIPTION REF NUMBER & MFR CODE	USABLE ON CODE	(4) UNIT OF MEAS	(5) QTY INC IN UNIT	(6) 15-DAY ORGANIZATIONAL MAINTENANCE ALW (a) 1-5	(b) 6-20	(c) 21-50	(d) 51-100	(7) ILLUSTRATION (a) FIG. NO.	(b) ITEM NO.
N	PAOZZ	4730-957-5336	TEE, REDUCING: SCREWED, NO. 125, 2 1/2 X 2 1/2 X 3/4 IN. 3411 (63686)	C	EA	1	•	•	•	•	162	38
N	MOOZZ		HOSE, WATER, RUBBER: 2 1/8 IN. ID 508-4510948-169 (80064) MANUFACTURE FROM:	C	EA	1					162	39
N	PCOZZ	4720-235-4122	HOSE, RUBBER, 2 1/8 IN. ID, AS REQUIRED ZZH28TYPE2GRADEBCLASS1 (81348)		FT		•	•	•	•	162	
N	MOOZZ		TUBE, COPPER: 2 1/8 IN. OD 508-4510948-162 (80064) MANUFACTURE FROM:	C	EA	1					162	40
N	PAOZZ	4710-278-2222	TUBE, COPPER, 2 1/8 IN. OD, AS REQUIRED WWT795TYPEXCLASS2 (81348)		FT		•	•	•	•	162	
N	MOOZZ		TUBE, COPPER: 2 1/8 IN. OD, 1 FT, 5 IN. LG 508-4510948-167 (80064) MANUFACTURE FROM:	C	EA -	1					162	41
N	PAOZZ	4710-278-2222	TUBE, COPPER, 2 1/8 IN. OD, AS REQUIRED WWT799TYPEXCLASS2 (81348)		FT		•	•	•	•	162	
N	MOOZZ		TUBE, COPPER: 2 5/8 IN. OD 508-4510948-160 (80064) MANUFACTURE FROM:	C	EA	1					162	42
N	PAOZZ	4710-278-2223	TUBE, COPPER, 2 5/8 IN. OD. AS REQUIRED		FT		•	•	•	•	162	
N	MOOZZ		TUBE, COPPER: SUCTION MANIFOLD, 4 1/8 IN. OD 508-4510948-148 (80064) MANUFACTURE FROM:	C	EA	1					162	43
N	PAOZZ	4710-822-9538	TUBE, COPPER, 4 1/8 IN., AS REQUIRED 74877A (00742)		FT		•	•	•	•	162	
N	XDOZZ		CAP, TUBE: 4 1/8 IN. PD15-154 (74163)	C	EA	2					162	44
N	XDOZZ		PETCOCK, SCREWED 757 (48422)	C	EA	8					163	1
N	XDOZZ		NIPPLE, THREADED: BOTH ENDS 1-8INX1INLG (14959)	C	EA	8					163	2
N	XDOZZ		CLAMP, EXTENSION: SPLIT PIPE, 2 1/2 IN. 138-2-1-21N (26403)	C	EA	32					163	3
N	MOOZZ		LINER, RUBBER: 50-60 DUR, 1/16 IN. THK 508-4510948-89 (80064) MANUFACTURE FROM:	C	EA	1					163	4
N	PCOZZ	5330-505-6611	GASKET, 1/16 IN. THK, AS REQUIRED MILR3065GRADESC614-HABEF (81349)		SH		•	•	•	•	163	
N	MOOZZ		PIPE: GALVANIZED, SCHEDULE 40, 1/2 IN. 508-4510948-13 (80064) MANUFACTURE FROM:	C	EA	1					163	5
N	PAOZZ	4710-277-8703	PIPE, 1/2 IN., SCHEDULE 40, GALVANIZED, AS REQUIRED WWP404GRADEBCLASSA53BS (81348)		FT		•	•	•	•	163	
N	XDOZZ		ELBOW: 90 DEG, SLIP RING, COPPER PD15-235-2-1-21N (74163)	C	EA	3					163	6

	(1) SMR CODE	(2) FEDERAL STOCK NUMBER	(3) DESCRIPTION REF NUMBER & MFR CODE	USABLE ON CODE	(4) UNIT OF MEAS	(5) QTY INC IN UNIT	(6) 15-DAY ORGANIZATIONAL MAINTENANCE ALW (a) 1-5	(b) 6-20	(c) 21-50	(d) 51-100	(7) ILLUSTRATION (a) FIG. NO.	(b) ITEM NO.
N	MOOZZ		TUBE, COPPER: 2 5/8 IN. OD 508-4510948-141 (80064) MANUFACTURE FROM:	C	EA	5					163	7
N	PAOZZ	4710-278-2223	TUBE, COPPER, 2 5/8 IN. OD, AS REQUIRED WWT799TYPEXFORM1 (81348)		FT		•	•	•	•	163	
N	PAOZZ		COUPLING, COMPRESSION: 3/4-14 THD SIZE, 5 IN. LG 210 (34749)	C	EA	5	•	•	•	•	163	8
N	PACZZ	4730-134-4222	CLAMP, HOSE: 2 1/2 IN. 52MS (66295)		EA	70	•	•	•	•	163	9
N	MOOZZ		HOSE, WATER, RUBBER: 2 5/8 IN. ID 508-4510948-147 (80064) MANUFACTURE FROM:	C	EA	35					163	10
N	PCOZZ	4720-287-4837	HOSE, FLEXIBLE, 2 5/8 IN. ID, AS REQUIRED ZZN28TYPE3GRADEBCLASS2ORS (81348)		FT		•	•	•	•	163	
N	MOOZZ		TUBE, COPPER: 2 5/8 IN. OD 508-4510948-140 (80064) MANUFACTURE FROM:	C	EA	1					163	11
N	PAOZZ	4710-278-2223	TUBE, COPPER, 2 5/8 IN. OD, AS REQUIRED WWT799TYPEXFORM1 (81438)		FT		•	•	•	•	163	
N	MOOZZ		TUBE, STEEL: 2 5/8 IN. OD 508-4510948-146 (80064) MANUFACTURE FROM:	C	EA	16					163	12
N	PAOZZ	4710-006-1647	TUBE, STEEL, 2 5/8 IN. OD, AS REQUIRED QQT830ASEAMLESSCOSR (81348)		FT		•	•	•	•	163	
N	MOOZZ		TUBE, COPPER: 2 5/8 IN. OD 508-4510948-138 (80064) MANUFACTURE FROM:	C	EA	1					163	13
N	PAOZZ	4710-278-2223	TUBE, COPPER, 2 5/8 IN. OD, AS REQUIRED WWT799TYPEXFORM1 (81348)		FT		•	•	•	•	163	
N	MOOZZ		TUBE, COPPER: 2 5/8 IN. OD 508-4510948-132 (80064) MANUFACTURE FROM:	C	EA	5					163	14
N	PAOZZ	4710-278-2223	TUBE, COPPER, 3 5/8 IN., AS REQUIRED WWT799TYPEXFORM1 (81348)		FT		•	•	•	•	163	
N	MOOZZ		TUBE, COPPER: 2 5/8 IN. OD 508-4510948-130 (80064) MANUFACTURE FROM:	C	EA	4					163	15
N	PAOZZ	4710-278-2223	TUBE, COPPER, 2 5/8 IN. OD, AS REQUIRED WWT799TYPEXFORM1 (81348)		FT		•	•	•	•	163	
N	PAOZZ		ADAPTER, SLEEVE: NEOPRENE, 2 1/2 IN. 2114 (34749)	C	EA	13	•	•	•	•	163	16
N	PAOZZ		COUPLING, COMPRESSION 210-2-7-8IN (34749)	C	EA	7	•	•	•	•	163	17
N	MOOZZ		TUBE, COPPER: 2 5/8 IN. OD 508-4510948-142 (80064) MANUFACTURE FROM:	C	EA	7					163	18
N	PAOZZ	4710-278-2223	TUBE, COPPER, 2 5/8 IN. OD, AS REQUIRED WWT799TYPEXFORM1 (81348)		FT		•	•	•	•	163	
N	PAOZZ	4730-722-3591	ADAPTER, COPPER: TUBE PD15101-2-1-21N (74163)	C	EA	19	•	•	•	•	163	19
N	PAOZZ	4820-899-5730	VALVE, GLOBE: 125 NO., 2 1/2 IN. 1 (14959)	C	EA	7	•	•	•	•	163	20

	(1) SMR CODE	(2) FEDERAL STOCK NUMBER	(3) DESCRIPTION REF NUMBER & MFR CODE	USABLE ON CODE	(4) UNIT OF MEAS	(5) QTY INC IN UNIT	(6) 15-DAY ORGANIZATIONAL MAINTENANCE ALW (a) 1-5	(b) 6-20	(c) 21-50	(d) 51-100	(7) ILLUSTRATION (a) FIG. NO.	(b) ITEM NO.
N	PAOZZ	4730-821-9812	ADAPTER: FITTING TO MALE THREADS, 2 IN. WCA04-2IN (41947)	C	EA	1	*	*	*	*		
N	PACZZ	4730-909-8627	CLAMP, HOSE: HI TORQUE, 2 5/8 IN. 36HS (66295)	C	EA	8	*	*	*	*		
N	PAOZZ		VALVE, GLOBE: ANGLE, NO. 125, 2 1/2 IN. 2-2-1-2IN (14959)	C	EA	1	*	*	*	*		
N	PAOZZ		COUPLING, HALF: SCREWED 2119-2-1-2IN (26403)	C	EA	1	*	*	*	*		
N	PAOZZ		NIPPLE, PIPE: 2 1/2 X 3 IN. LG 2-1-2INX3INLG (26403)	C	EA	2	*	*	*	*		
N	PAOZZ	4730-880-7377	UNION, SCREWED: 150 NO., 2 1/2 IN. 3477 (63686)	C	EA	1	*	*	*	*		
N	XDOZZ		CLAMP, PIPE: 4 IN. 216 (26403)	C	EA	2						
N	MOOZZ		GASKET, NEOPRENE: 1/16 IN. THK 508-45109A8-52A (80064) MANUFACTURE FROM:	C	EA							
N	PCOZZ	5330-505-6611	GASKET, 1/16 IN. THK, AS REQUIRED MILR3065GRADESC614-4ABEF (81349)		SH		*	*	*	*		
N	PAOZZ	4730-797-7983	UNION, COPPER: TUBE A11240 (41967)	C	EA	2	*	*	*	*		
N	PACZZ	4730-908-6292	CLAMP, HOSE 48SH2-1-2IN (66295)	C	EA	4	*	*	*	*		
N	XDOZZ		NIPPLE, PIPE: IPS STD, THREADED 2-1-2INX5INLG (63686)	C	EA	1						
N	PAOZZ		VALVE, GATE: SCREWED, NO. 125 428-2-1-2IN (14959)	C	EA	1	*	*	*	*		
N	XTOZZ		BUSHING, REDUCING: SCREWED, NO. 125 3428-3-4X1-2IN (63686)	C	EA	1						
N	XDOZZ		NIPPLE, CLOSE PIPE 2-1-2INIPSSTD (63686)	C	EA	1						
N	XDOZZ		NIPPLE, PIPE: LONG 2-1-2INX6INLG (63686)	C	EA	1						
N	PAOZZ	4730-375-7861	ELBOW: STREET: 90 DEG, TYPE F-C L.R, 2 IN. PD15-272-2IN (74163)	C	EA	1	*	*	*	*		
N	XDOZZ		ELBOW, STREET: 90 DEG 3409-1-2IN (63686)	C	EA	1						
N	PAOZZ	4730-982-9583	UNION: C-C C107-2IN (41947)	C	EA	1	*	*	*	*		
N	PAOZZ	4730-900-2663	ELBOW, STREET: 90 DEG PD15-254-2IN (74163)	C	EA	1	*	*	*	*		
N	PAOZZ	4820-922-0192	VALVE, ANGLE: STOP CHECK, SCREWED 135-2IN (48422)	C	EA	1	*	*	*	*		
N	PAOZZ	4730-838-9762	ELBOW, STREET: 90 DEG, SEAMLESS, COPPER PD15-254-1-1-2IN (74163)	C	EA	2	*	*	*	*		
N	XDOZZ		ELBOW, STREET: 1/2 IN., 90 DEG, SCREWED, NO. 125 3409 (63686)	C	EA	2						
N	XDOZZ		ELBOW: 1 1/2 IN., 90 DEG, L.R SOLID, TYPE C-C PD15-242 (74163)	C	EA	2						

(1) SMR CODE	(2) FEDERAL STOCK NUMBER	(3) DESCRIPTION REF NUMBER & MFR CODE	USABLE ON CODE	(4) UNIT OF MEAS	(5) QTY INC IN UNIT	(6) 15-DAY ORGANIZATIONAL MAINTENANCE ALW (a) 1-5	(b) 6-20	(c) 21-50	(d) 51-100	(7) ILLUSTRATION (a) FIG. NO.	(b) ITEM NO.
MOOZZ		HOSE, RUBBER: 2 3/8 IN. 38093-210 (26571) MANUFACTURE FROM:	AB	EA	1						
PCOZZ	4720-235-4121	HOSE, AS REQUIRED		FT		•	•	•	•		
MOOZZ		HOSE, RUBBER: 2 3/8 IN. 38094-210 (26571) MANUFACTURE FROM:	AB	EA	1						
PCOZZ	4720-235-4121	HOSE, AS REQUIRED		FT		•	•	•	•		
MOOZZ		HOSE, RUBBER: 1 5/8 IN. 38095-210 (26571) MANUFACTURE FROM:	B	EA	1						
PCOZZ	4720-235-4127	HOSE, AS REQUIRED		FT		•	•	•	•		
		GROUP 86 - PUMP, BILGE									
PBOHH	4320-595-3333	PUMP, BILGE: MONEL IMPELLER SHAFT 23127 (76122) (INCLUDES SAME COMPONENTS AS PUMP, FSN 4320-116-9719, EXCEPT WHERE ANNOTATED)	AB	EA	1	•	•	•	•	16A	
PBOHH	4320-116-9719	PUMP, BILGE: MONEL IMPELLER SHAFT 23173 (76122)	AB	EA	1	•	•	•	•	16A	
XDOZZ		NUT, PLAIN, HEXAGON: SHAFT END 21176 (76122)	AB	EA	2					16A	1
XDOZZ		PULLEY ASSEMBLY: SHAFT 21194 (76122)	AB	EA	2					16A	2
PAOZZ	5305-591-2692	SCREW, CAP, FILLISTER HEAD: PULLEY 154 (76122)	AB	EA	4	•	•	•	•	16A	3
XDOZZ		NUT, LOCK: PULLEY 21191 (76122)	AB	EA	4					16A	4
PAOZZ	5310-367-1812	WASHER, LOCK: PULLEY 21192 (76122)	AB	EA	4	•	•	•	•	16A	5
XAOZZ		FLANGE 158 (76122)	AB	EA	2					16A	6
XAOZZ		PULLEY 157 (76122)	AB	EA	2					16A	7
XDOZZ		SCREW, MACHINE: RH, BEARING RETAINER 136 (76122)	AB	EA	8					16A	8
XDOZZ		WASHER, LOCK: BEARING RETAINER 2157 (76122)	AB	EA	8					16A	9
XDOZZ		RETAINER, BEARING 21142 (76122)	AB	EA	2					16A	10
PAOZZ	3110-004-3439	BEARING, BALL: SHAFT 21159 (76122)	AB	EA	2	•	•	•	•	16A	11
PAOZZ	4320-363-7364	SHIM: HOUSING 119 (76122)	AB	EA	2	•	•	•	•	16A	12
PAOZZ	4320-591-2684	SLINGER: PUMP SHAFT 187 (76122)	AB	EA	2	•	•	•	•	16A	13
XDOZZ		CUP, GREASE MS35758-8 (96906)	AB	EA	2					16A	14
XDOZZ		NUT, PLAIN, HEXAGON: PACKING GLAND 21244 (76122)	AB	EA	4					16A	15
XDOZZ		LOCK, SPRING: PACKING GLAND NUT 21189 (76122)	AB	EA	2					16A	16

(1) SMR CODE	(2) FEDERAL STOCK NUMBER	(3) DESCRIPTION REF NUMBER & MFR CODE	USABLE ON CODE	(4) UNIT OF MEAS	(5) QTY INC IN UNIT	(6) 15-DAY ORGANIZATIONAL MAINTENANCE ALW (a) 1-5	(b) 6-20	(c) 21-50	(d) 51-100	(7) ILLUSTRATION (a) FIG. NO.	(b) ITEM NO.
XDOZZ		RETAINER, PACKING 21140 (76122)	AB	EA	2					164	17
PCOZZ		PACKING SET: SERVICE 21153 (76122)	AB	EA	2	•	•	•	•	164	18
PCOZZ	5330-591-2710	PACKING SET: OVERHAUL 152 (76122)	AB	EA	2	•	•	•	•	164	19
PAOZZ	5307-248-7333	STUD, PLAIN: PACKING GLAND 112 (76122)	AB	EA	4	•	•	•	•	164	20
PAOZZ	5310-591-2696	NUT, PLAIN, HEXAGON: HOUSING 21284 (76122)	AB	EA	12	•	•	•	•	164	20
PAOZZ	5310-591-2694	WASHER, FLAT: HOUSING 21184 (76122)	AB	EA	12	•	•	•	•	164	21
XAOZZ		HOUSING ASSEMBLY A133 (76122) (U/O PUMP, FSN 4320-595-3333, ONLY)	AB	EA	1					164	22
XAOZZ		HOUSING ASSEMBLY A132 (76122) (U/O PUMP, FSN 4320-116-9719, ONLY)	AB	EA	1					164	22
XAOZZ		HOUSING 22929 (76122) (U/O PUMP, FSN 4320-116-9719, ONLY)	AB	EA	1					164	23
XAOZZ		HOUSING 22931 (76122) (U/O PUMP, FSN 4320-595-3333, ONLY)	AB	EA	1					164	23
PAOZZ	5307-206-1459	STUD, PLAIN: HOUSING 21150 (76122)	AB	EA	12	•	•	•	•	164	24
PAOZZ	4730-287-2889	PLUG, DRAIN: HOUSING 146 (76122)	AB	EA	2	•	•	•	•	164	25
PCOZZ	4320-034-3868	GASKET SET: PUMP 109A (76122)	AB	EA	2	•	•	•	•	164	26
PAOZZ	4320-168-0892	SHAFT AND IMPELLER ASSEMBLY 23071 (76122) (U/O PUMP, FSN 4320-116-9719, ONLY)	AB	EA	1	•	•	•	•	164	27
PAOZZ	4320-063-7471	SHAFT AND IMPELLER ASSEMBLY 23072 (76122) (U/O PUMP, FSN 4320-595-3333, ONLY)	AB	EA	1	•	•	•	•	164	27
PAOZZ	5315-221-7229	PIN, STRAIGHT 128 (76122)	AB	EA	2	•	•	•	•	164	28
XAOZZ		IMPELLER, SHAFT 21174 (76122) (U/O PUMP, FSN 4320-116-9719, ONLY)	AB	EA	1					164	29
XAOZZ		IMPELLER, SHAFT 21180 (76122) (U/O PUMP, FSN 4320-595-3333, ONLY)	AB	EA	1					164	29
XAOZZ		SHAFT, DRIVE M108 (76122)	AB	EA	2					164	30
XDOZZ		KEY, WOODRUFF: SHAFT 129 (76122)	AB	EA	2					164	31
XAOZZ		BODY ASSEMBLY A101 (76122)	AB	EA	2					164	32
PAOZZ	3120-661-5787	BEARING, SLEEVE SHAFT 115 (76122)	AB	EA	2	•	•	•	•	164	33
XAOZZ		BODY 22920 (76122)	AB	EA	2					164	34
PCCZZ	3030-460-2502	BELT, V: PUMP DRIVE MB39256858 (96906)	B	EA	2	•	•	•	•	165	1

(1) SMR CODE	(2) FEDERAL STOCK NUMBER	(3) DESCRIPTION REF NUMBER & MFR CODE	USABLE ON CODE	(4) UNIT OF MEAS	(5) QTY INC IN UNIT	(6) 15-DAY ORGANIZATIONAL MAINTENANCE ALW (a) 1-5	(b) 6-20	(c) 21-50	(d) 51-100	(7) ILLUSTRATION (a) FIG. NO.	(b) ITEM NO.
PBOHH	4320-116-9720	PUMP, BILGE 23129 (76122) (INCLUDES SAME COMPONENTS AS PUMP, FSN 4320-391-9524, EXCEPT WHERE ANNOTATED)	A	EA	1		•	•	•	165	
PBOHH	4320-391-9524	PUMP, BILGE 23178 (76122)	B	EA	1	•	•	•	•	165	
XDOZZ		NUT, PLAIN, HEXAGON: SHAFT 21228 (76122)	AB	EA	2					165	2
XDOZZ		PULLEY, DRIVE 2170 (76122)	AB	EA	2					165	3
PAOZZ	5305-367-1806	SCREW, CAP, ROUNDHEAD: BEARING RETAINER 236 (76122)	AB	EA	8	•	•	•	•	165	4
PAOZZ	5310-367-1812	WASHER, LOCK: BEARING RETAINER 21192 (76122)	AB	EA	8	•	•	•	•	165	5
XDOZZ		RETAINER, BEARING 21210 (76122)	AB	EA	2					165	6
PAOZZ	3110-156-3521	BEARING, BALL: SHAFT 21225 (76122)	AB	EA	2	•	•	•	•	165	7
PAOZZ	5310-367-1799	NUT, PLAIN, HEXAGON: PACKING GLAND 239 (76122)	AB	EA	16	•	•	•	•	165	8
PAOZZ	5310-262-3608	WASHER, SPRING: PACKING GLAND 21219 (76122)	AB	EA	4	•	•	•	•	165	9
XDOZZ		GLAND, PACKING 21208 (76122)	AB	EA	2					165	10
PAOZZ	5340-367-1808	SHIM, HOUSING 219 (76122)	AB	EA	2	•	•	•	•	165	11
PAOZZ	4320-591-2679	SLINGER, PACKING GLAND 21236 (76122)	AB	EA	2	•	•	•	•	165	12
PCOZZ	4320-367-1801	PACKING SET: SERVICE, 4 PER SET 21220 (76122)	AB	EA	2	•	•	•	•	165	13
PCOZZ	5330-591-2709	PACKING, SOLID 252 (76122)	AB	EA	2	•	•	•	•	165	14
PAOZZ	5305-591-2690	STUD, PLAIN: PACKING GLAND 4512 (76122)	AB	EA	4	•	•	•	•	165	15
PAOZZ	5310-558-6882	WASHER, FLAT: HOUSING 21233 (76122)	AB	EA	12	•	•	•	•	165	16
XDOZZ		CUP, GREASE MS35758-8 (96906)	AB	EA	2					165	17
XAOZZ		BODY ASSEMBLY A201 (76122)	AB	EA	2					165	18
PAOZZ	2040-367-1793	BEARING, SLEEVE: SHAFT 21221 (76122)	AB	EA	1	•	•	•	•	165	19
XAOZZ		BODY 22934 (76122)	AB	EA	2					165	20
MAOZZ	5315-591-2697	KEY, PULLEY 6111 (76122)	AB	EA	2	•	•	•	•	165	21
PAOZZ	4320-235-1663	SHAFT AND IMPELLER ASSEMBLY 23074 (76122) (U/O PUMP, FSN 4320-116-9720, ONLY)	A	EA	1	•	•	•	•	165	22
PAOZZ	4320-073-1843	SHAFT AND IMPELLER 23073 (76122) (U/O PUMP, FSN 4320-319-9524, ONLY)	B	EA	1	•	•	•	•	165	22
PAOZZ	5315-367-1802	PIN 226 (76122)	AB	EA	2	•	•	•	•	165	23

(1) SMR CODE	(2) FEDERAL STOCK NUMBER	(3) DESCRIPTION REF NUMBER & MFR CODE	USABLE ON CODE	(4) UNIT OF MEAS	(5) QTY INC IN UNIT	(6) 15-DAY ORGANIZATIONAL MAINTENANCE ALW (a) 1-5	(b) 6-20	(c) 21-50	(d) 51-100	(7) ILLUSTRATION (a) FIG. NO.	(b) ITEM NO.
XAOZZ		IMPELLER 240 (76122) (U/O PUMP, FSN 4320-116-9720, ONLY)	A	EA	1					165	24
XAOZZ		IMPELLER 204 (76122) (U/O PUMP, FSN 4320-319-9524, ONLY)	B	EA	1					165	24
XAOZZ		SHAFT 208 (76122) (U/O PUMP, FSN 4320-116-9720, ONLY)	A	EA	1					165	25
XAOZZ		SHAFT 208N (76122) (U/O PUMP, FSN 4320-391-9524, ONLY)	B	EA	1					165	25
PCOZZ	5330-202-1981	GASKET: HOUSING 209A (76122)	AB	EA	4	*	*	*	*	165	26
XAOZZ		HOUSING ASSEMBLY 22838 (76122) (U/O PUMP, FSN 4320-116-9720, ONLY)	A	EA	1					165	27
XAOZZ		HOUSING ASSEMBLY A202 (76122) (U/O PUMP, FSN 4320-391-9524, ONLY)	B	EA	1					165	27
PAOZZ	5307-367-1809	STUD, PLAIN: HOUSING 21260 (76122)	C	EA	6	*	*	*	*	165	28
XAOZZ		HOUSING 203 (76122) (U/O PUMP, FSN 4320-116-9720, ONLY)	A	EA	1					165	29
XAOZZ		HOUSING 22936 (76122) (U/O PUMP, FSN 4320-391-9524, ONLY)	B	EA	1					165	29
PAOZZ	4730-278-3001	PLUG, PIPE: HOUSING DRAIN 21267 (76122)	AB	EA	2	*	*	*	*	165	30
N PBOHH	4320-937-1115	PUMP, BILGE: RH 24571 (76122)	C	EA	1	*	*	*	*	166	
N PAOZZ	4730-278-3001	PLUG, DRAIN 21267 (76122)	C	EA	1	*	*	*	*	166	1
N PAOZZ	5310-367-1799	NUT, PLAIN, HEXAGON: HOUSING TO BODY 21268 (76122)	C	EA	6	*	*	*	*	166	2
N PAOZZ	5310-558-6882	WASHER, FLAT: HOUSING TO BODY 21233 (76122)	C	EA	6	*	*	*	*	166	3
N PAOZZ	5315-982-1988	PIN, COTTER: CLUTCH LEVER HANDLE 21507 (76122)	C	EA	1	*	*	*	*	166	4
N PAOZZ	4320-922-0198	SHAFT, CLUTCH HANDLE 21679 (76122)	C	EA	1	*	*	*	*	166	5
N PAOZZ	3040-922-0277	LEVER, CLUTCH 21673 (76122)	C	EA	1	*	*	*	*	166	6
N XDOZZ		NUT, HEXAGON: SHAFT 21125 (76122)	C	EA	1					166	7
N XDOZZ		CLAMP, WASHER: REAR BEARING 21697 (76122)	C	EA	1					166	8
N XDOZZ		SNAP RING: FRONT BEARING 21695 (76122)	C	EA	2					166	9
N PAOZZ	3110-193-0632	BALL, BEARING 21225 (76122)	C	EA	2	*	*	*	*	166	10
N PAOZZ	5365-003-4161	SPACER, REAR BEARING 21696 (76122)	C	EA	1	*	*	*	*	166	11
N PAOZZ	5360-926-0118	LOCK, SPRING 22945 (76122)	C	EA	1	*	*	*	*	166	12

(1) SMR CODE	(2) FEDERAL STOCK NUMBER	(3) DESCRIPTION REF NUMBER & MFR CODE	USABLE ON CODE	(4) UNIT OF MEAS	(5) QTY INC IN UNIT	(6) 15-DAY ORGANIZATIONAL MAINTENANCE ALW (a) 1-5	(b) 6-20	(c) 21-50	(d) 51-100	(7) ILLUSTRATION (a) FIG. NO.	(b) ITEM NO.
N PAOZZ	4320-922-0194	CLUTCH ASSEMBLY 21691 (76122)	C	EA	1	•	•	•	•	166	
N XDOZZ		ADJUSTING NUT 22942 (76122)	C	EA	1					166	13
PAOZZ	5310-558-6882	WASHER, FLAT: CLUTCH 21233 (76122)	C	EA	1	•	•	•	•	166	14
N PAOZZ	4320-922-0195	CLUTCH ASSEMBLY 21668 (76122)	C	EA	1	•	•	•	•	166	
N XAOZZ		COLLAR ASSEMBLY 22968 (76122)	C	EA	1					166	15
N PAOZZ	3040-922-0276	LEVER 21723 (76122)	C	EA	6	•	•	•	•	166	16
N PAOZZ	4320-937-1136	ROLLERS, LEVER 22940 (76122)	C	EA	9	•	•	•	•	166	17
N PAOZZ	5315-926-0119	KEY 23075 (76122)	C	EA	1	•	•	•	•	166	18
N PAOZZ	4320-922-0197	PRESSURE, PLATE ASSEMBLY: HARDENED 22944 (76122)	C	EA	1	•	•	•	•	166	19
N PAOZZ	3110-156-3576	BEARING 21662 (76122)	C	EA	1	•	•	•	•	166	20
N XDOZZ		PULLEY 21694 (76122)	C	EA	1					166	21
N PAOZZ	4320-922-0196	PRESSURE PLATE ASSEMBLY 22943 (76122)	C	EA	1	•	•	•	•	166	22
N XDOZZ		HUB: SHORT 21693 (76122)	C	EA	1					166	23
N XDOZZ		HUB: LONG 21692 (76122)	C	EA	1					166	24
N XDOZZ		ADJUSTING NUT SCREW 22941 (76122)	C	EA	1						
PAOZZ	5310-367-1799	NUT, PLAIN, HEXAGON: PACKING GLAND 21268 (76122)		EA	2	•	•	•	•	166	
N PAOZZ	5310-262-3608	WASHER, LOCK: PACKING GLAND 21219 (76122)	C	EA	2	•	•	•	•	166	26
N PAOZZ	5340-367-1808	SHIM 21224 (76122)	C	EA	1	•	•	•	•	166	27
N PAOZZ	4320-591-2679	SLINGER 21236 (76122)	C	EA	1	•	•	•	•	166	28
N XDOZZ		PACKING, GLAND 21208 (76122)	C	EA	1					166	29
N PCOZZ	5330-367-1801	PACKING, SERVICE 21220 (76122)	C	EA	1	•	•	•	•	166	30
N PAOZZ	5330-591-2709	PACKING, SOLID 21234 (76122)	C	EA	2	•	•	•	•	166	31
N PAOZZ	5307-206-4044	STUD, PACKING GLAND 21261 (76122)	C	EA	2	•	•	•	•	166	32
N XDOZZ		KEY 21678 (76122)	C	EA	1					166	33
N XDOZZ		BODY, PUMP BASE 21685 (76122)	C	EA	1					166	34
N PAOZZ	4320-937-0986	SHAFT AND IMPELLER ASSEMBLY 24572 (76122)	C	EA	1	•	•	•	•	166	
N PAOZZ	5315-367-1802	PIN 21226 (76122)	C	EA	1	•	•	•	•	166	35

	(1) SMR CODE	(2) FEDERAL STOCK NUMBER	(3) DESCRIPTION REF NUMBER & MFR CODE	USABLE ON CODE	(4) UNIT OF MEAS	(5) QTY INC IN UNIT	(6) 15-DAY ORGANIZATIONAL MAINTENANCE ALW (a) 1-5	(b) 6-20	(c) 21-50	(d) 51-100	(7) ILLUSTRATION (a) FIG. NO.	(b) ITEM NO.
N	XAOZZ		IMPELLER 21207 (76122)	C	EA	1					166	36
N	XAOZZ		SHAFT, MONEL 26187 (76122)	C	EA	1					166	37
N	PCOZZ	4320-218-2311	GASKET: BODY TO HOUSING 21216 (76122)	C	EA	1	•	•	•	•	166	38
N	XAOZZ		HOUSING ASSEMBLY: RH 22936 (76122)	C	EA	1					166	39
N	PAOZZ	5307-367-1809	STUD 21260 (76122)	C	EA	6	•	•	•	•	166	40
N	XAOZZ		HOUSING M28224 (76122)	C	EA	1					166	
N	PBOHH	4320-922-0199	PUMP, BILGE: LH 24213 (76122) (COMPONENTS SAME AS PUMP, P/N 24214 (76122), EXCEPT WHERE INDIVIDUAL COMPONENTS ARE ANNOTATED)	C	EA	1	•	•	•	•	167	
N	PBOHH	4320-922-0200	PUMP, BILGE: RH 24214 (76122)	C	EA	1	•	•	•	•	167	
N	PAOZZ	4730-287-2889	PLUG, PIPE: HOUSING DRAIN 21185 (76122)	C	EA	1	•	•	•	•	167	1
N	PAOZZ	5310-591-2696	NUT, PLAIN, HEXAGON: BODY TO HOUSING 139 (76122)	C	EA	6	•	•	•	•	167	2
N	PAOZZ	5310-591-2694	WASHER, LOCK: BODY TO HOUSING 21184 (76122)	C	EA	6	•	•	•	•	167	3
N	XBOZZ		PIN, COTTER: CLUTCH LEVER 21507 (76122)	C	EA	1					167	4
N	XDOZZ		SHAFT: CLUTCH LEVER 21679 (76122)	C	EA	1					167	5
N	XDOZZ		LEVER, CLUTCH 21673 (76122)	C	EA	1					167	6
N	XDOZZ		NUT, HEXAGON: SHAFT 21125 (76122)	C	EA	1					167	7
N	XDOZZ		CLAMP, WASHER: REAR BEARING 21677 (76122)	C	EA	1					167	8
N	PAOZZ	5365-003-4145	SNAP RING: FRONT BEARING 21675 (76122)	C	EA	2	•	•	•	•	167	9
N	PAOZZ	3110-156-3502	BALL BEARING 21159 (76122)	C	EA	2	•	•	•	•	167	10
N	PAOZZ	5365-003-4160	SPACER: REAR BEARING 21676 (76122)	C	EA	1	•	•	•	•	167	11
N	PAOZZ	4320-936-3985	CLUTCH ASSEMBLY 21669 (76122)	C	EA	1	•	•	•	•	167	
N	XDOZZ		LOCK, SPRING 22945 (76122)	C	EA	1					167	12
N	XDOZZ		ADJUSTING NUT 22942 (76122)	C	EA	1					167	13
N	PAOZZ	5310-558-6882	WASHER, PLAIN 21233 (76122)	C	EA	2	•	•	•	•	167	14
N	PAOZZ	4320-922-0195	CLUTCH ASSEMBLY 21668 (76122)	C	EA	1	•	•	•	•	167	
N	XAOZZ		COLLAR ASSEMBLY 22968 (76122)	C	EA	1					167	15
N	XDOZZ		LEVERS 21723 (76122)	C	EA	6					167	16

(1) SMR CODE	(2) FEDERAL STOCK NUMBER	(3) DESCRIPTION REF NUMBER & MFR CODE	USABLE ON CODE	(4) UNIT OF MEAS	(5) QTY INC IN UNIT	(6) 15-DAY ORGANIZATIONAL MAINTENANCE ALW (a) 1-5	(b) 6-20	(c) 21-50	(d) 51-100	(7) ILLUSTRATION (a) FIG. NO.	(b) ITEM NO.
N XDOZZ		ROLLERS 22940 (76122)	C	EA	9					167	17
N XDOZZ		KEY 23075 (76122)	C	EA	1					167	18
N PAOZZ		PRESSURE PLATE ASSEMBLY: HARDENED 22944 (76122)	C	EA	1	•	•	•	•	167	19
N PAOZZ	3110-156-3576	BEARING 21662 (76122)	C	EA	1	•	•	•	•	167	20
N XDOZZ		PULLEY 21670 (76122)	C	EA	1					167	21
N PAOZZ	4320-922-0196	PRESSURE PLATE ASSEMBLY 22943 (76122)	C	EA	1	•	•	•	•	167	22
N XDOZZ		HUB: SHORT 21672 (76122)	C	EA	1					167	23
N XDOZZ		HUB: LONG 21671 (76122)	C	EA	1					167	24
N XDOZZ		ADJUSTING NUT SCREW 22941 (76122)	C	EA	1					167	
N PAOZZ	4320-363-7364	SHIM 21157 (76122)	C	EA	1	•	•	•	•	167	25
N PAOZZ	5310-591-2695	NUT, PLAIN, HEXAGON: PACKING GLAND 21244 (76122)	C	EA	2	•	•	•	•	167	26
N PAOZZ	4320-168-0894	NUT, LOCK: PACKING GLAND 21189 (76122)	C	EA	1	•	•	•	•	167	27
N PAOZZ	4310-591-2684	SLINGER 21198 (76122)	C	EA	1	•	•	•	•	167	28
N XDOZZ		PACKING, GLAND 21140 (76122)	C	EA	1					167	29
N PCOZZ	5330-916-4304	PACKING, SERVICE 21153 (76122)	C	EA	1	•	•	•	•	167	30
N PCOZZ	5330-591-2710	PACKING, SET, OVERHAUL 21188 (76122)	C	EA	1	•	•	•	•	167	31
N PAOZZ	5307-003-0709	STUD, PACKING GLAND 21751 (76122)	C	EA	2	•	•	•	•	167	32
N XDOZZ		BODY 21661 (76122)	C	EA	1					167	33
N XDOZZ		KEY 21678 (76122)	C	EA	1					167	34
N PAOZZ	4320-071-1982	SHAFT AND IMPELLER ASSEMBLY 24217 (76122) (U/O PUMP, P/N 24213 (76122), ONLY)	C	EA	1	•	•	•	•	167	
N PAOZZ	4320-078-8501	SHAFT AND IMPELLER ASSEMBLY 24216 (76122) (U/O PUMP, P/N 24214 (76122), ONLY)	C	EA	1	•	•	•	•	167	
N PAOZZ	5315-221-7229	PIN 21161 (76122)	C	EA	1	•	•	•	•	167	35
N XAOZZ		IMPELLER 21180 (76122) (U/W SHAFT, FSN 4320-071-1982, ONLY)	C	EA	1					167	36
N XAOZZ		IMPELLER 21179 (76122) (U/O SHAFT, FSN 4320-078-8501, ONLY)	C	EA	1					167	36
N XAOZZ		SHAFT, MODEL 21664 (76122)	C	EA	1					167	37

(1) SMR CODE	(2) FEDERAL STOCK NUMBER	(3) DESCRIPTION REF NUMBER & MFR CODE	USABLE ON CODE	(4) UNIT OF MEAS	(5) QTY INC IN UNIT	(6) 15-DAY ORGANIZATIONAL MAINTENANCE ALW (a) 1-5	(b) 6-20	(c) 21-50	(d) 51-100	(7) ILLUSTRATION (a) FIG. NO.	(b) ITEM NO.
N PCOZZ	5330-034-3868	GASKET 21149 (76122)	C	EA	1	*	*	*	*	167	38
N XDOZZ		HOUSING ASSEMBLY 22929 (76122) (U/O PUMP, P/N 24214 (76122), ONLY)	C	EA	1					167	39
N XAOZZ		HOUSING 132 (76122) (U/O HOUSING, P/N 22929 (76122), ONLY)	C	EA	1					167	
N PAOZZ	5307-206-1459	STUD 21150 (76122)	C	EA	6	*	*	*	*	167	40
N XDOZZ		HOUSING ASSEMBLY 22931 (76122) (U/O PUMP, P/N 24213 (76122), ONLY)	C	EA	1					167	41
N XAOZZ		HOUSING 133 (76122) (U/W HOUSING, P/N 22931 (76122), ONLY)	C	EA	1						
PCOZZ	3030-529-0482	BELT, V: PUMP DRIVE MS39256042 (96906)	B	EA	1	*	*	*	*		
N PCOZZ	3030-180-2100	BELT, MATCHED SET: BILGE PUMP BASESET2 (24161)	C	EA	1	*	*	*	*		
		GROUP 87 - PUMP, HAND, BILGE									
PAOZZ	4320-244-9865	PUMP, HAND: BILGE MG1-4-12 (20252)		EA	1	*	*	*	*	168	1
XAOZZ		VALVE, HAND PUMP MG1-5 (20252)		EA	1					168	2
XDOZZ		PLUNGER, HAND PUMP MG1-7 (20252)		EA	1					168	3
		GROUP 88 - COMPASS SYSTEM									
N PACZZ	5920-296-0445	FUSE, CARTRIDGE F60C500V5A (81349)	C	EA	2	*	*	*	*		

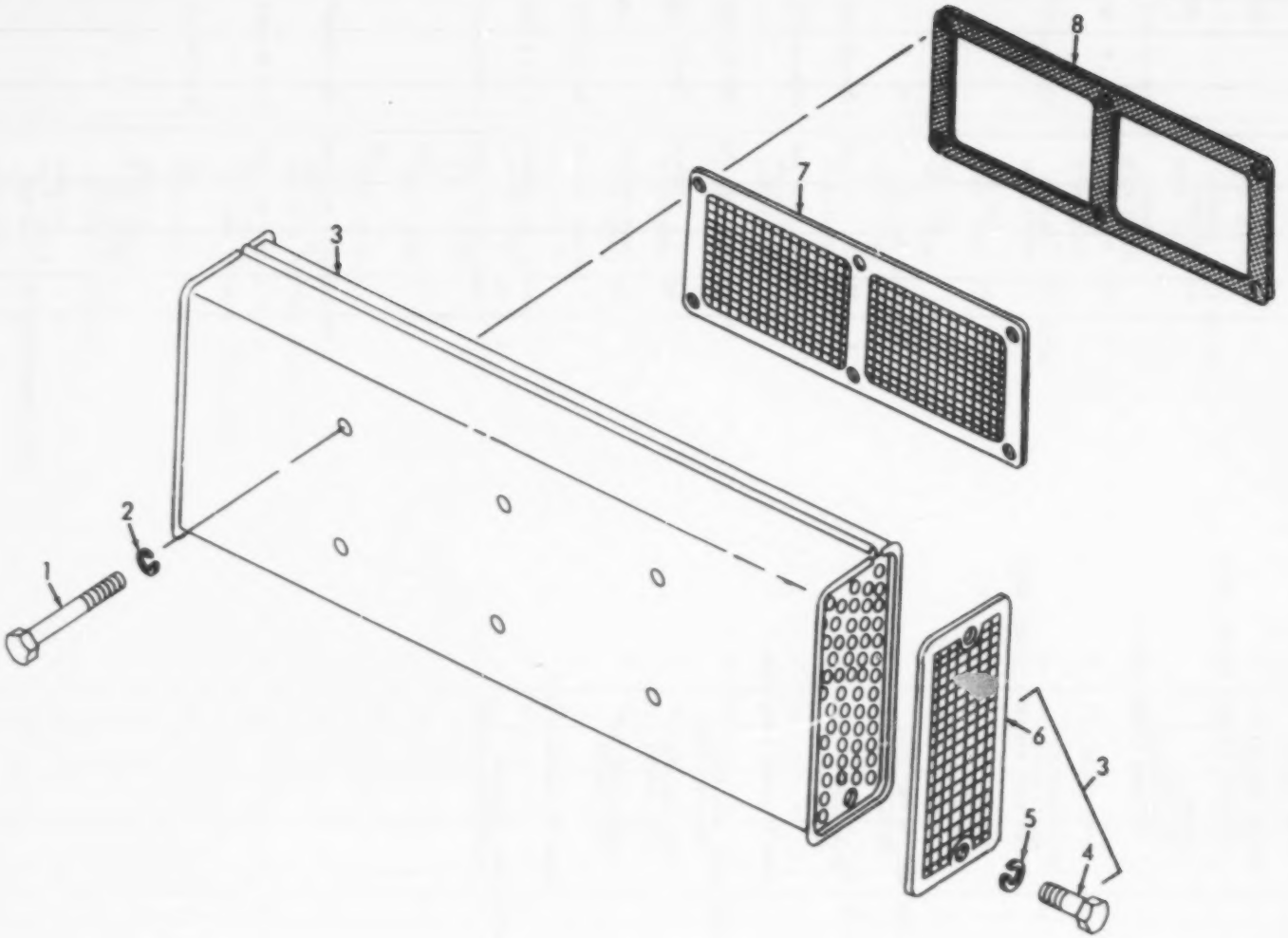

Figure 1. Air Inlet Silencer

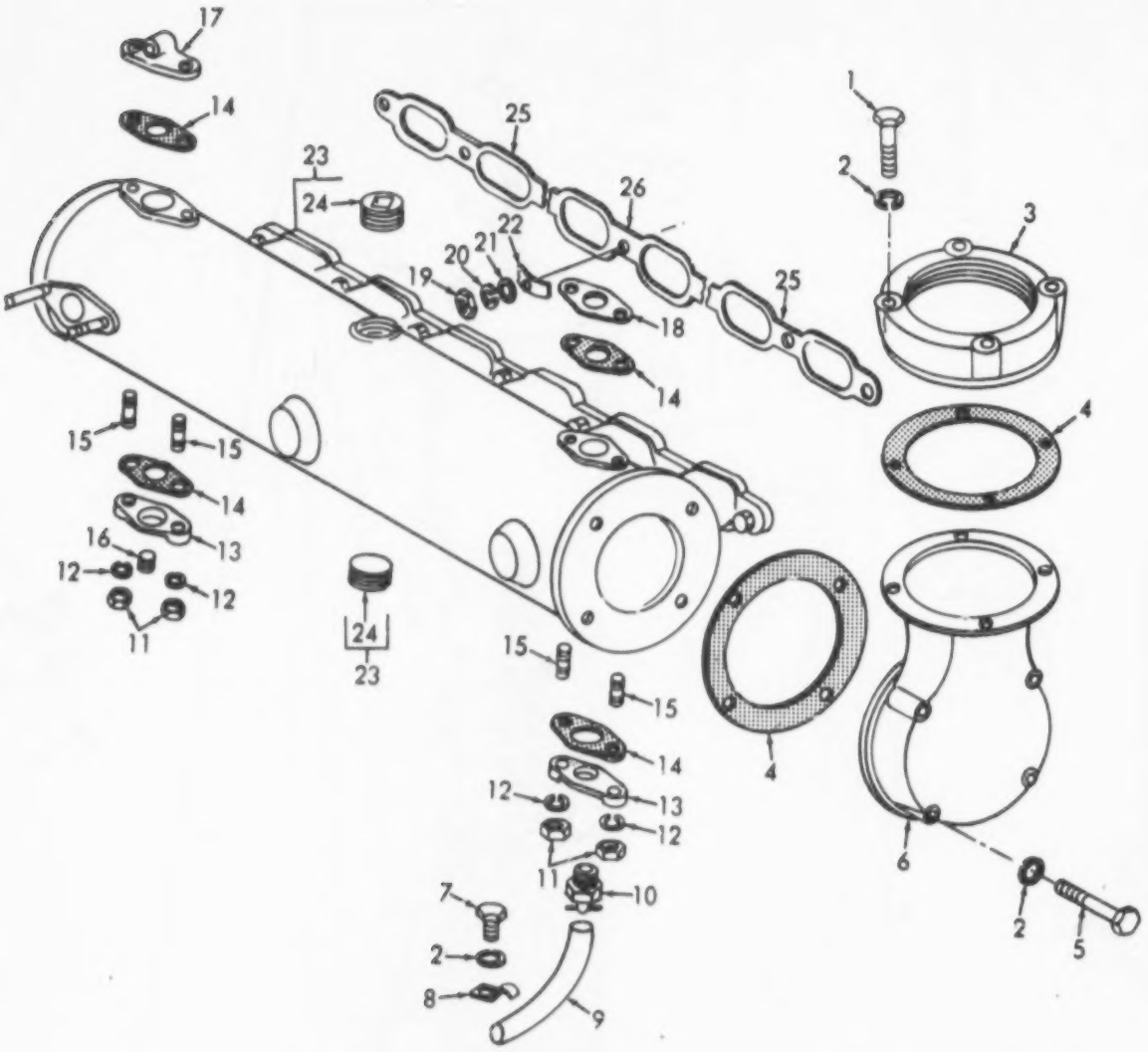

ME 1905-217-34P/2

Figure 2. Exhaust Manifold

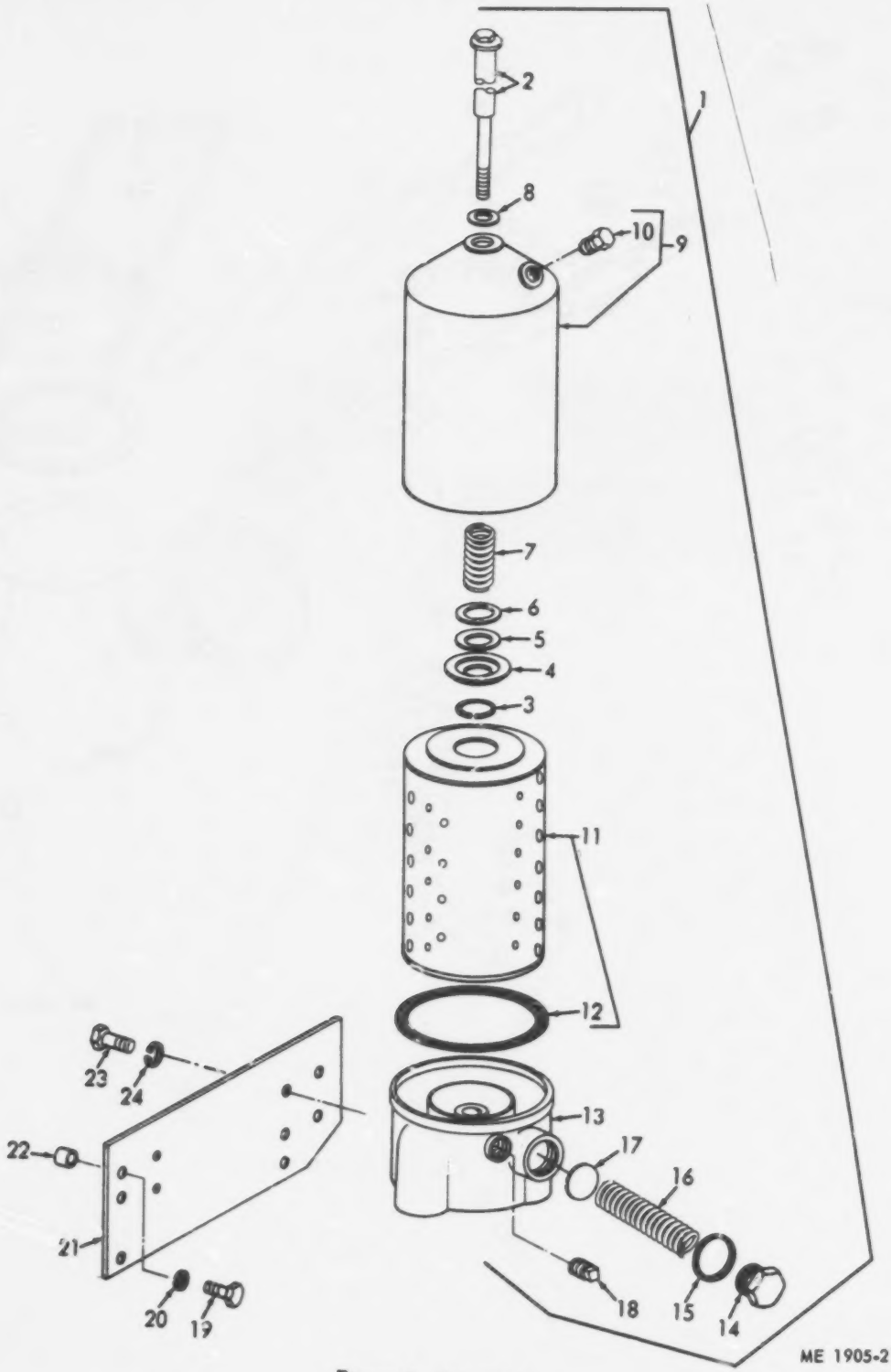

ME 1905-217-34P/3

Figure 3. Filter Oil

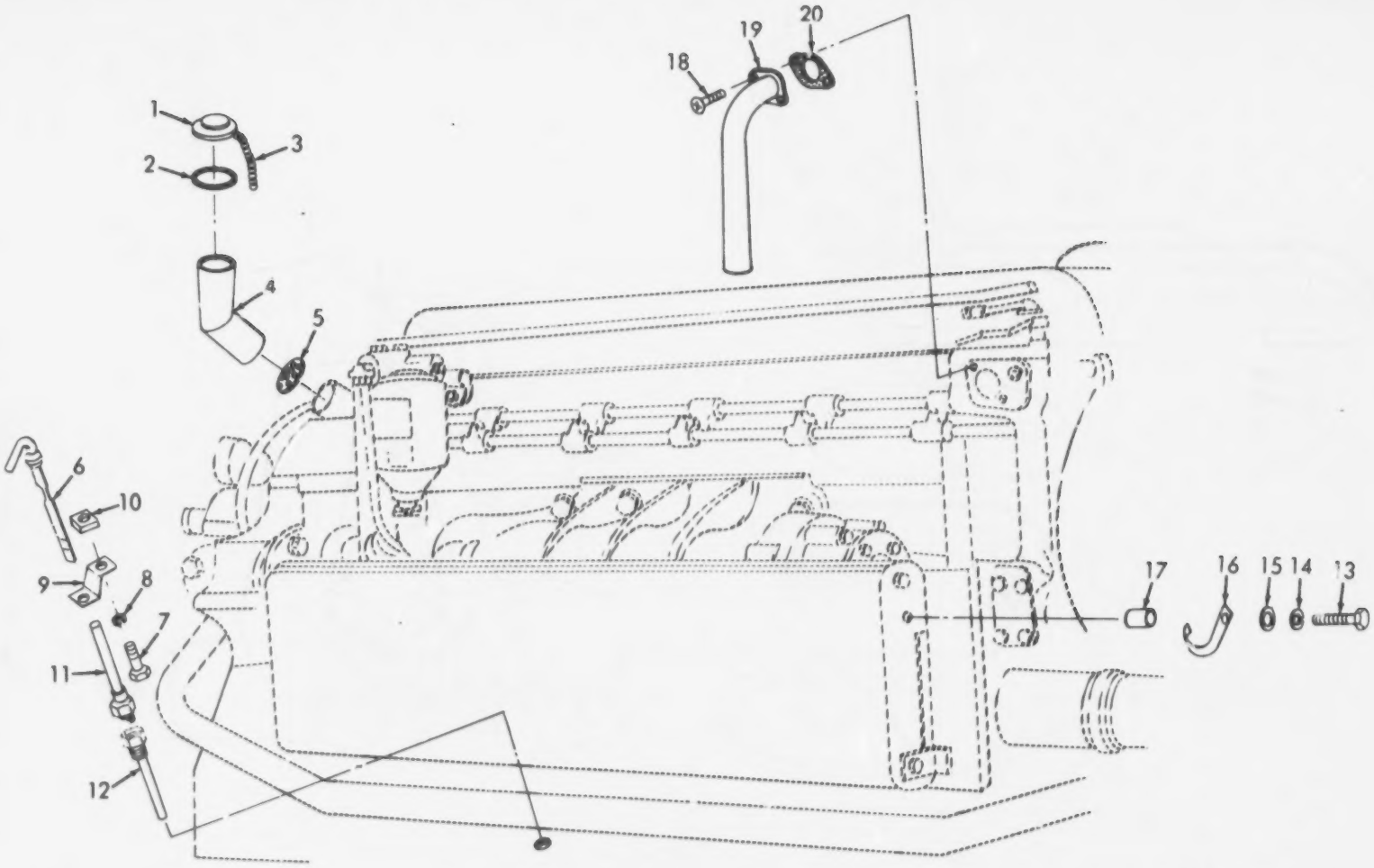

Figure 4. Oil Filter, Dipstick and Breather

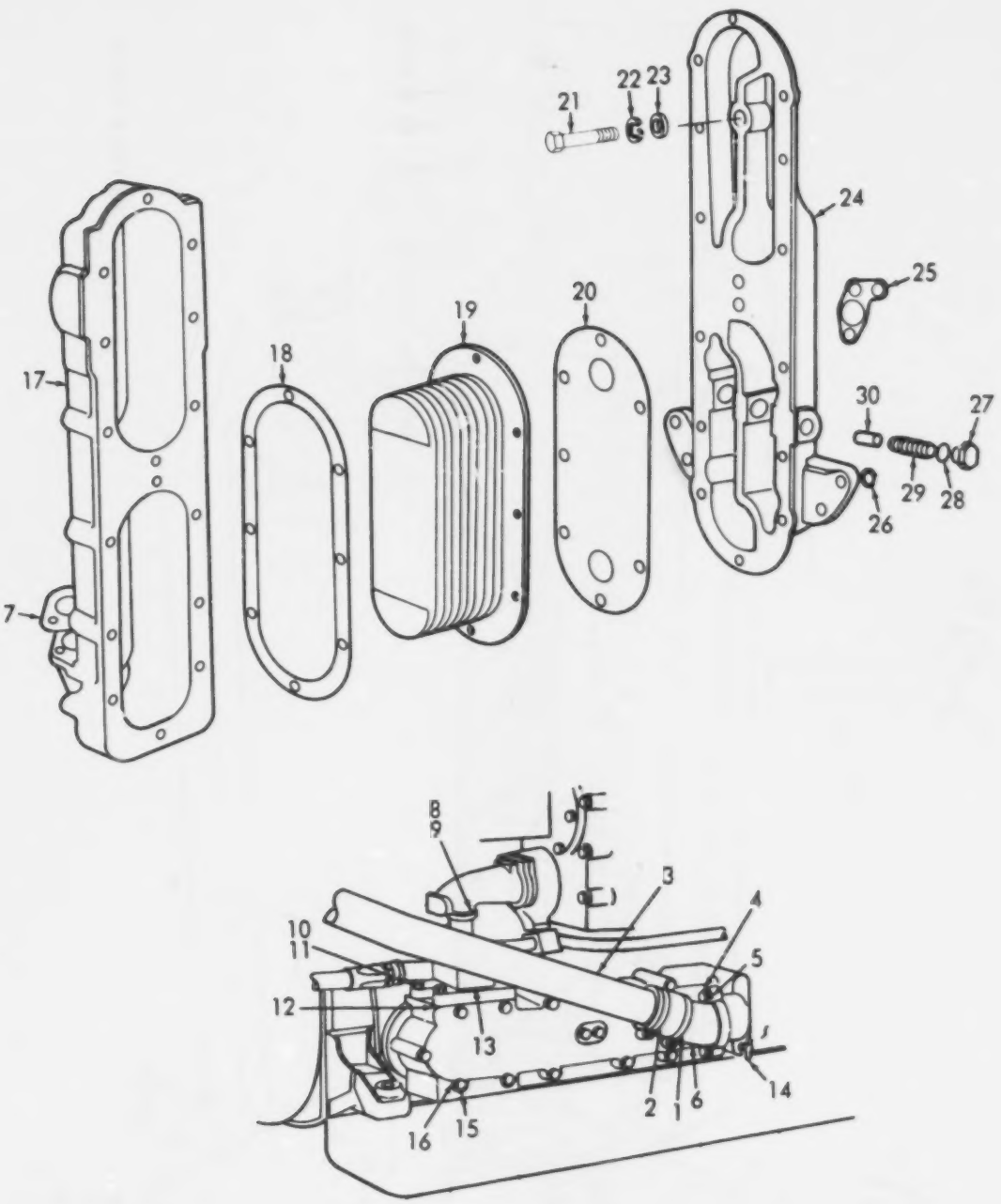

ME 1905-217-34P/5

Figure 5. Oil Cooler (Engine)

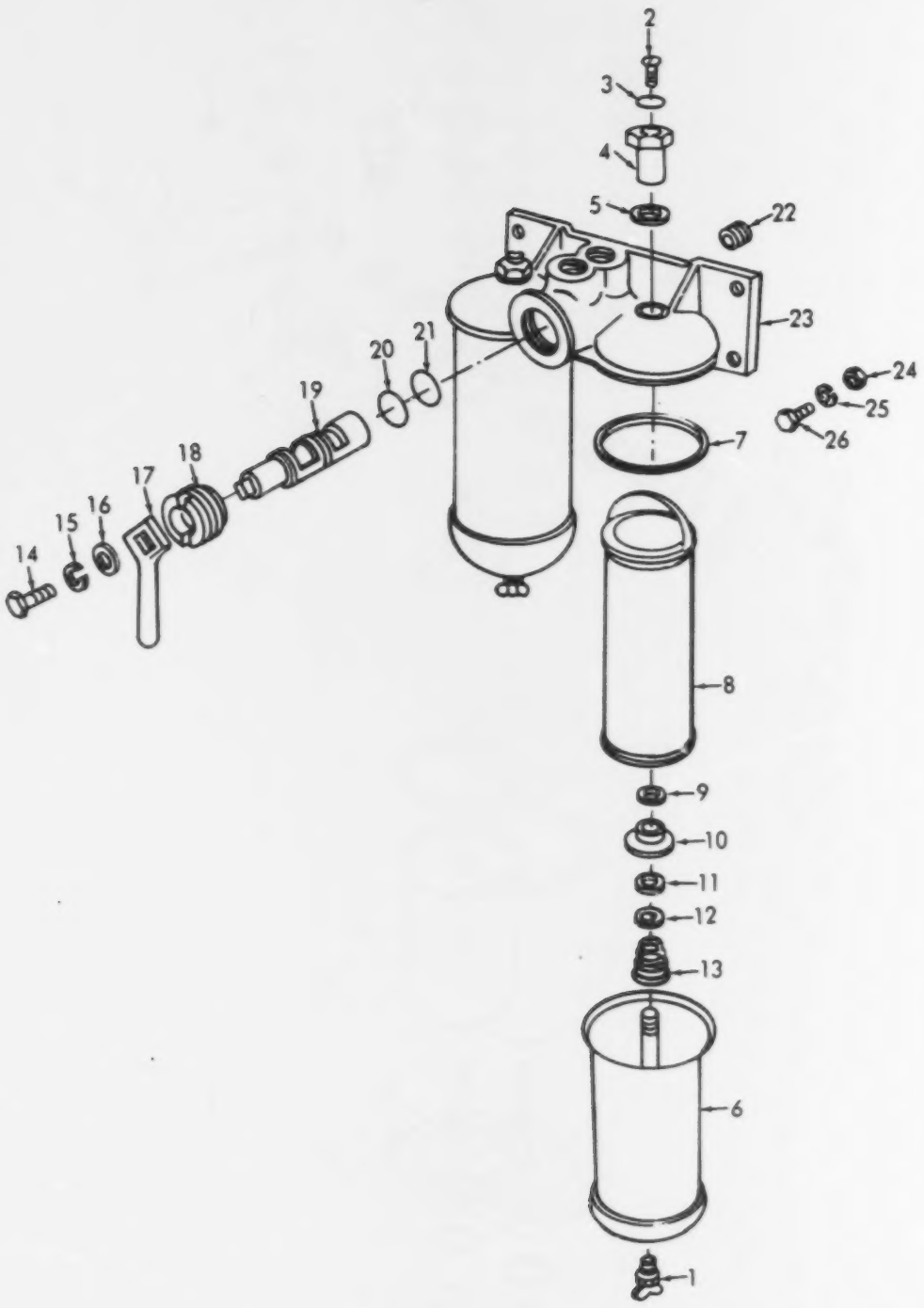

ME 1905-217-34P/6

Figure 6. Fuel Filter

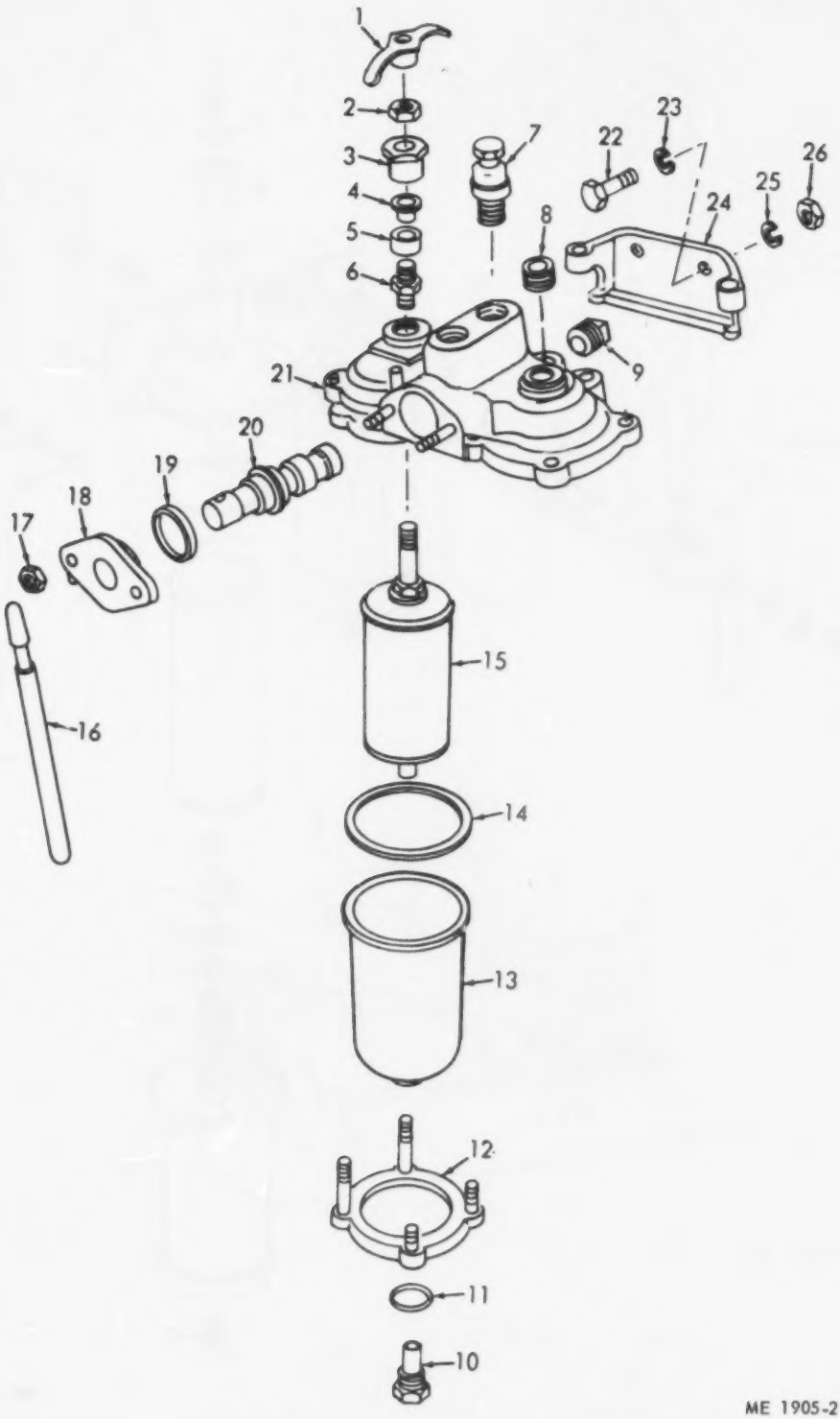

ME 1905-217-34P/7

Figure 7. Fuel Strainer (Engine Mounting)

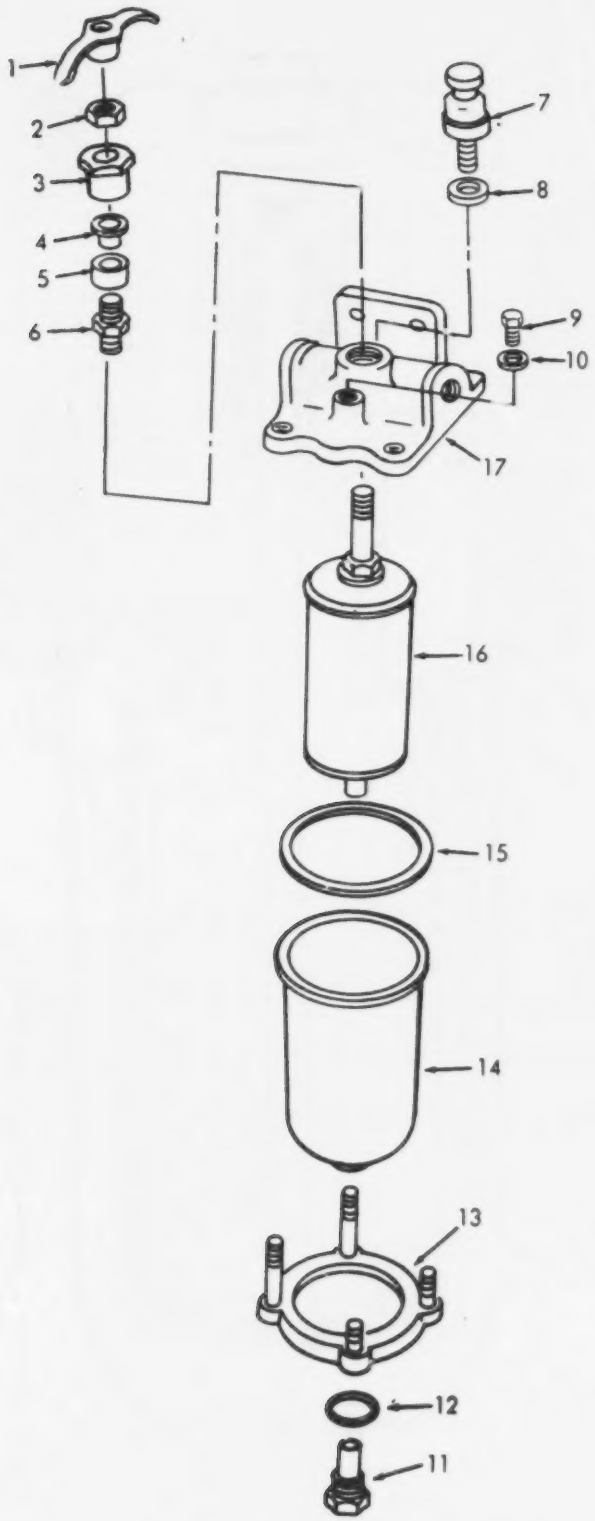

ME 1905-217-34P/8

Figure 8. Fuel Strainer (Line)

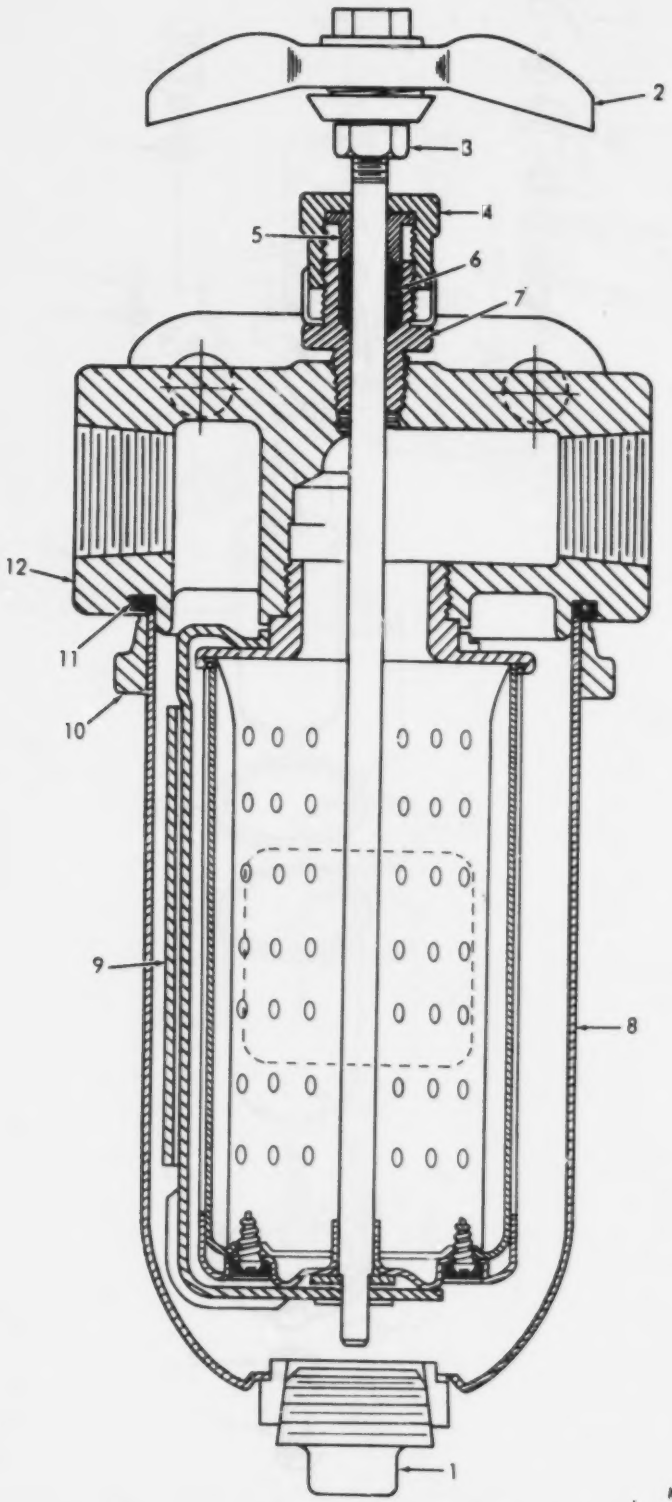

ME 1905-217-34P/9

Figure 9. Fuel Strainer (Line)

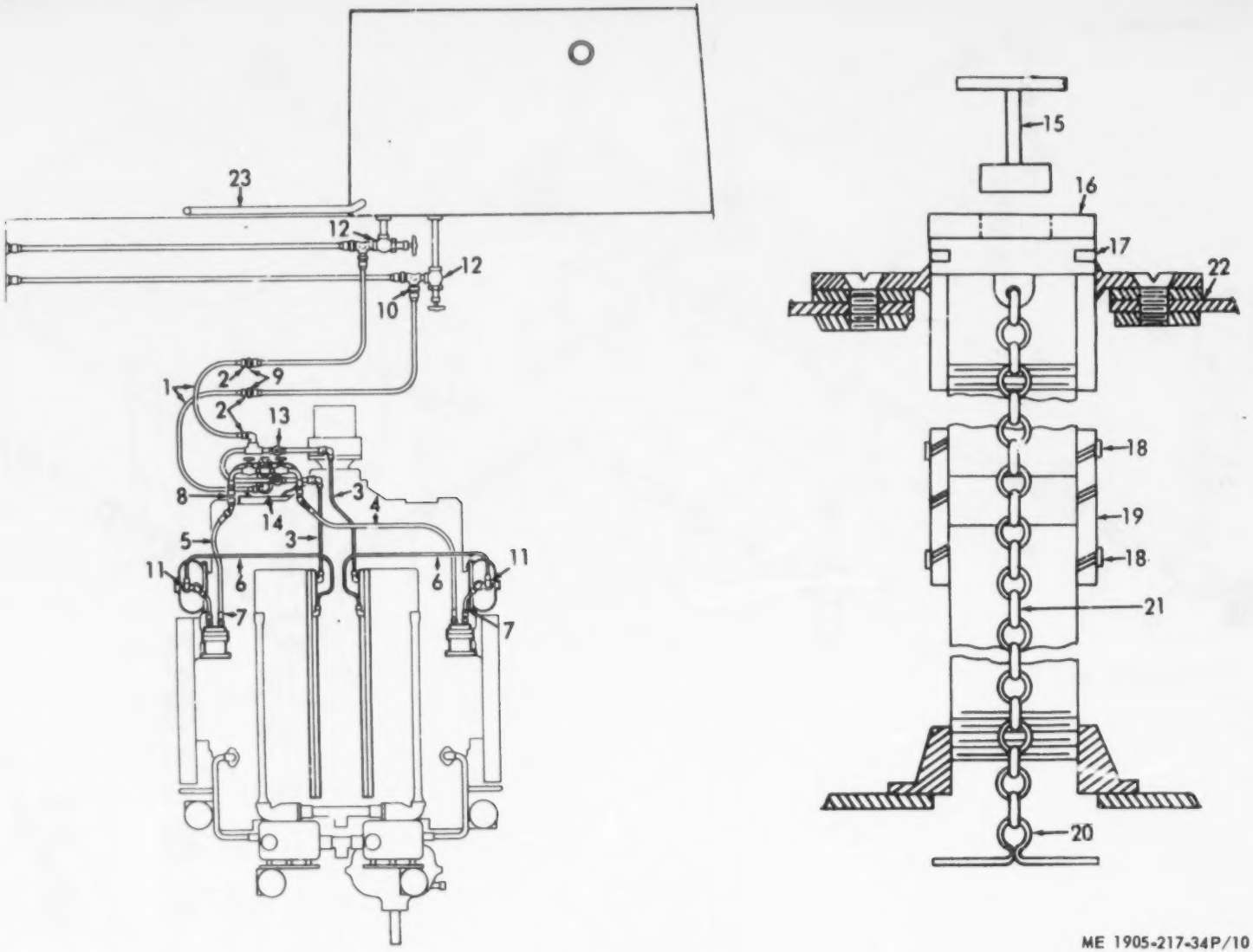

ME 1905-217-34P/10

Figure 10. Fuel Piping

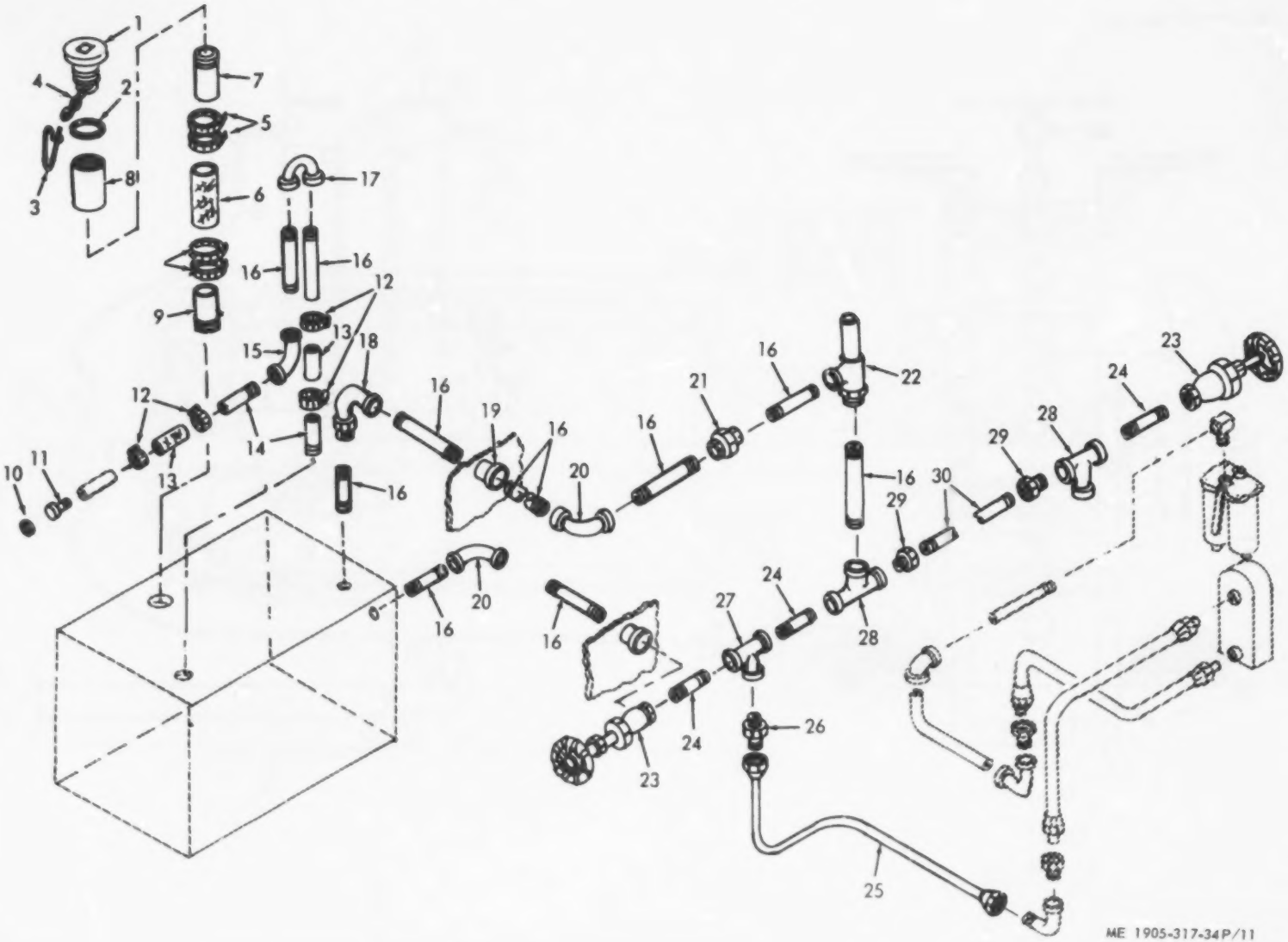

ME 1905-317-34P/11

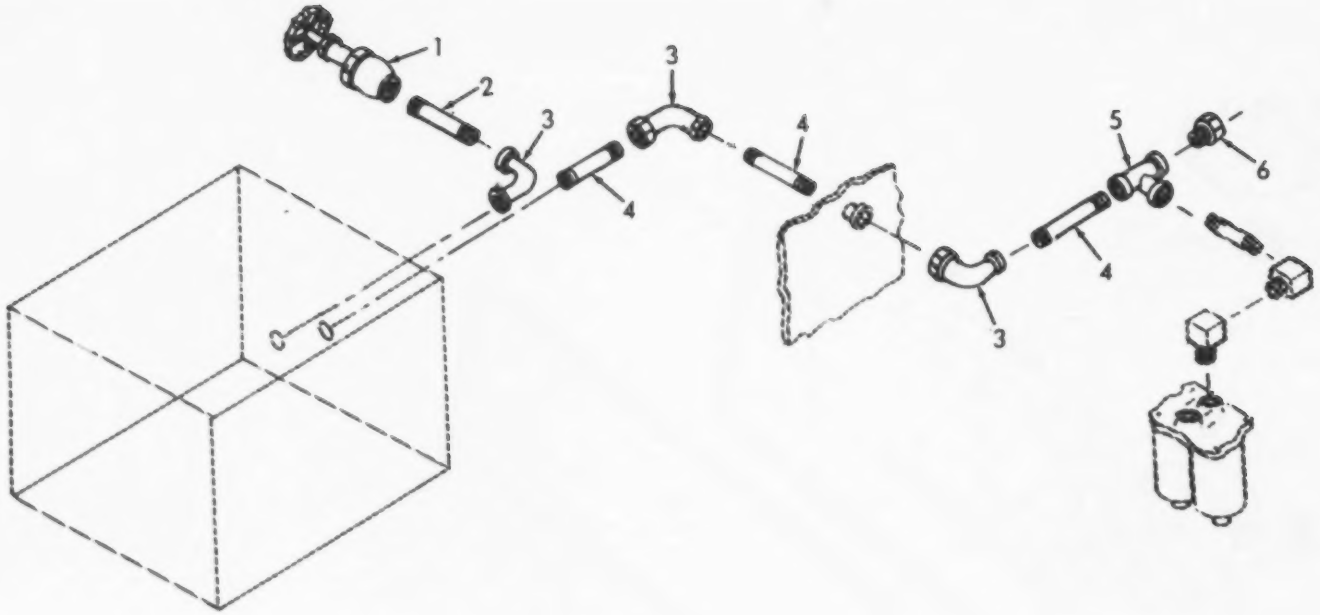

ME 1905-317-34P/12

Figure 12. Fuel Piping

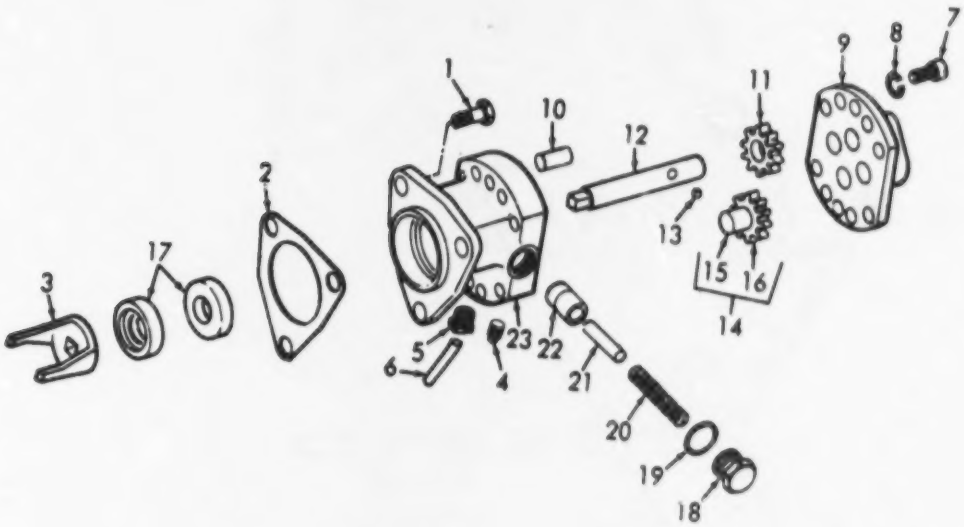

ME 1905-217-34P/13

Figure 13. Fuel Pump

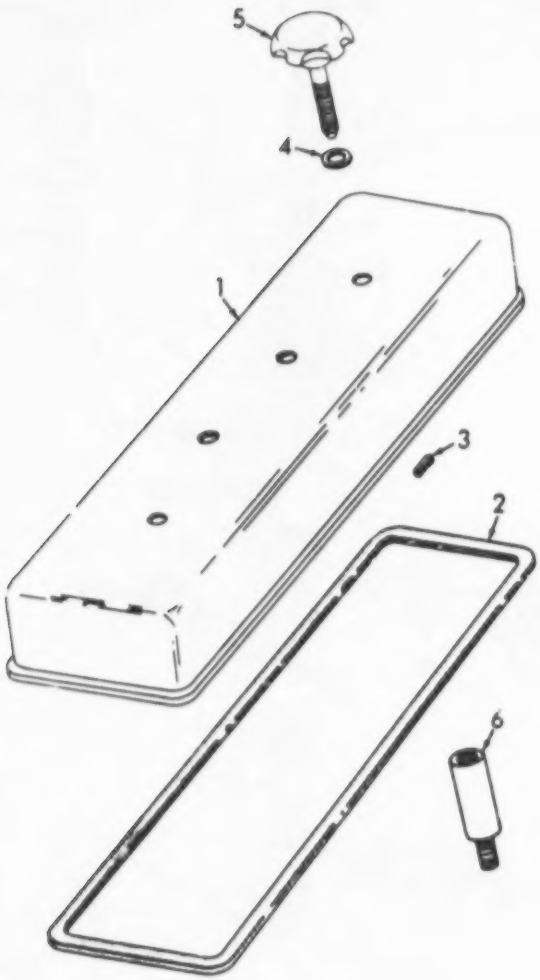

ME 1905-217-34P/14

Figure 14. Rocker Arm Cover

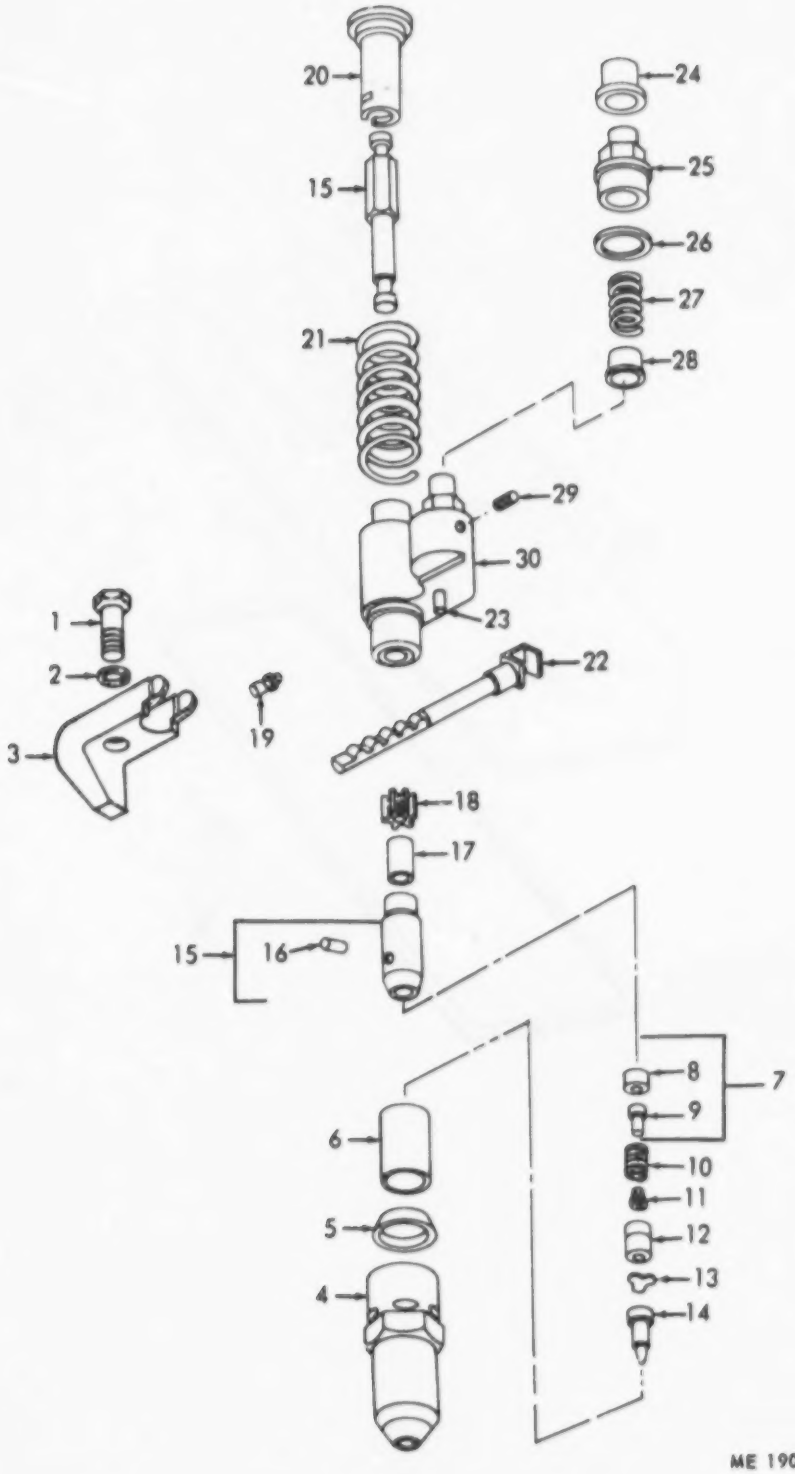

Figure 15. Fuel Injectors

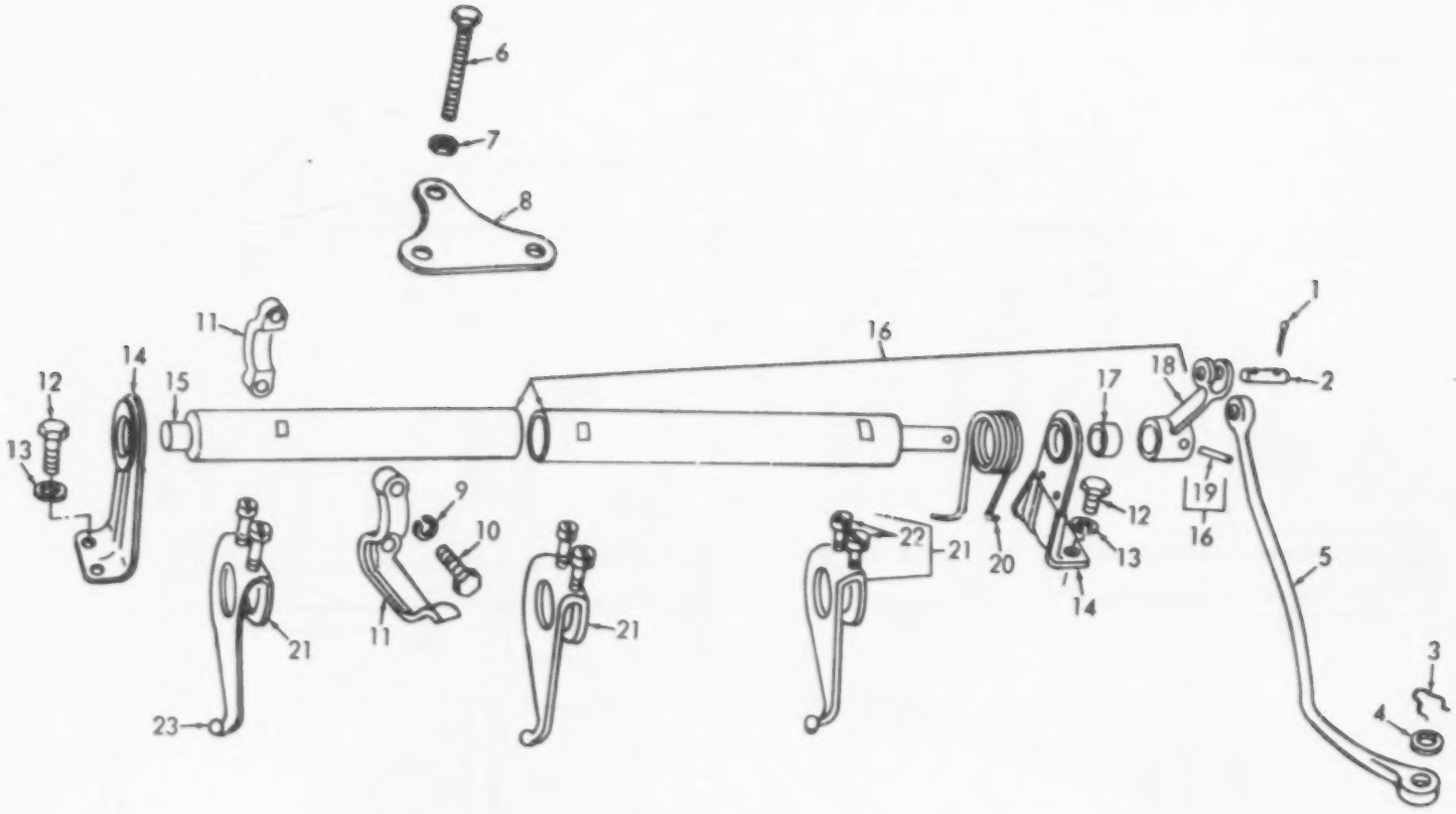

ME 1905-217-34P/16

Figure 16. Injector Control Tube

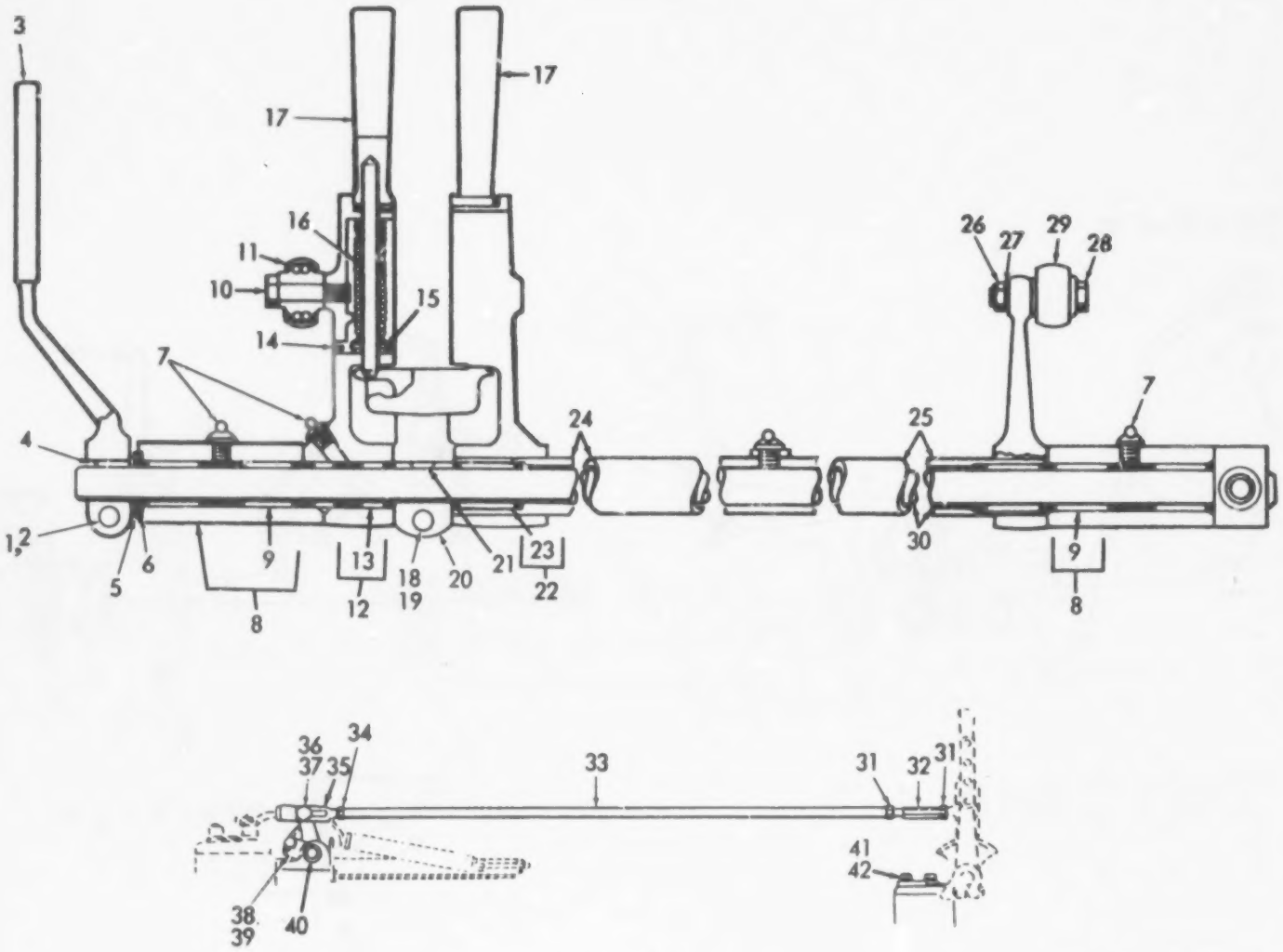

Figure 17. Throttle Controls

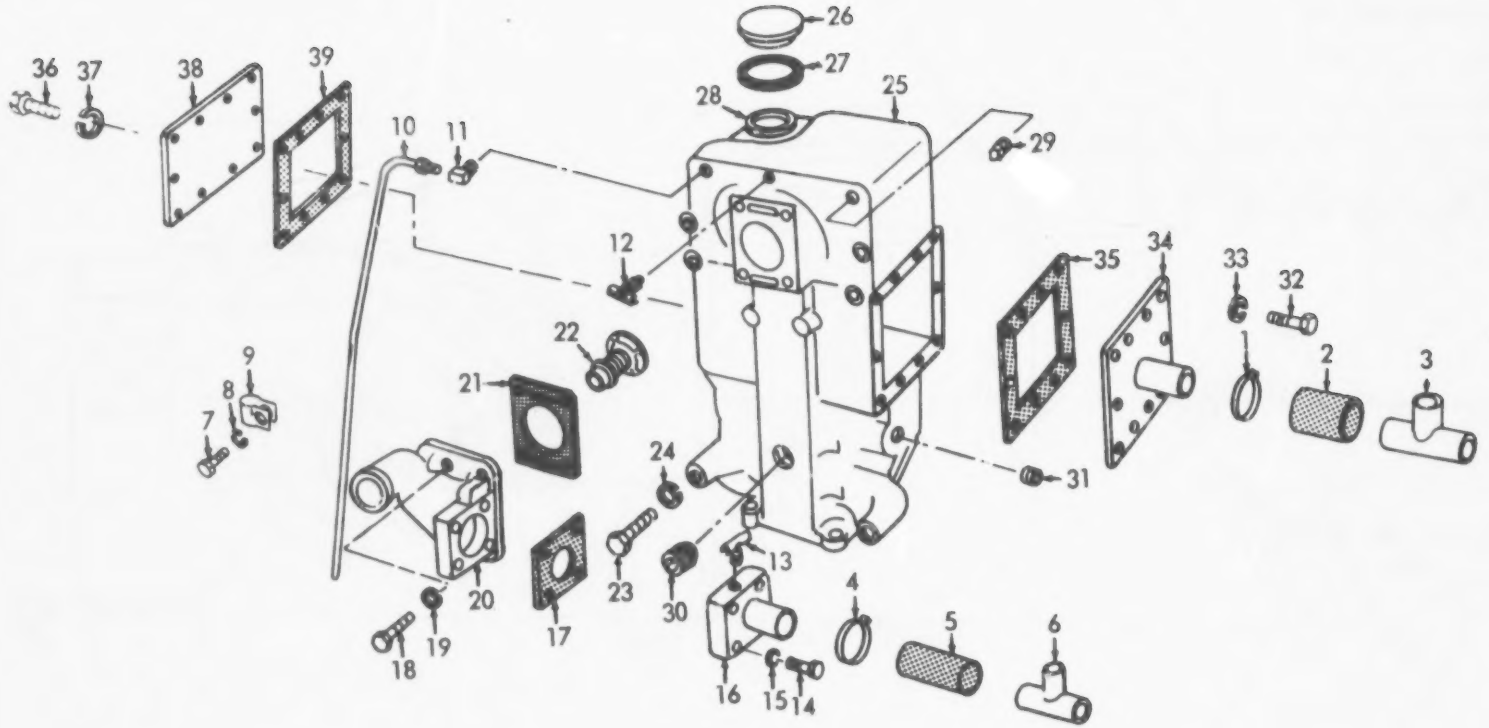

ME 1905-217-34P/18

Figure 18. Heat Exchanger (Engine)

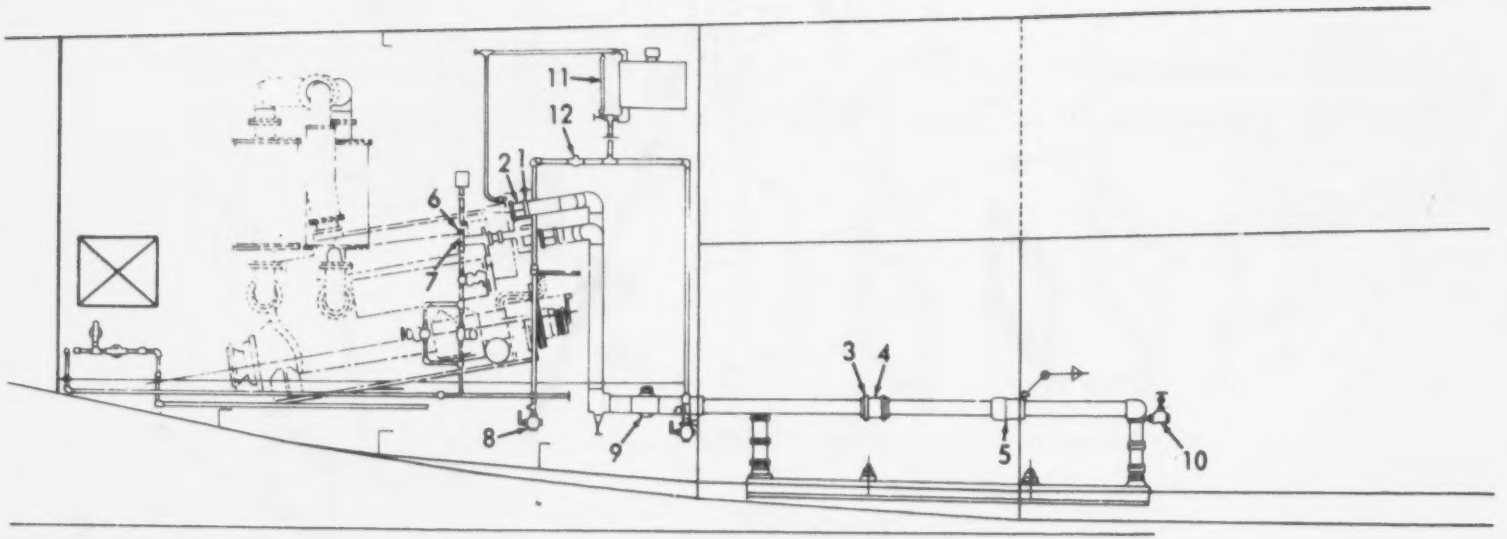

ME 1905-217-34P/19

Figure 19. Engine Cooling Piping

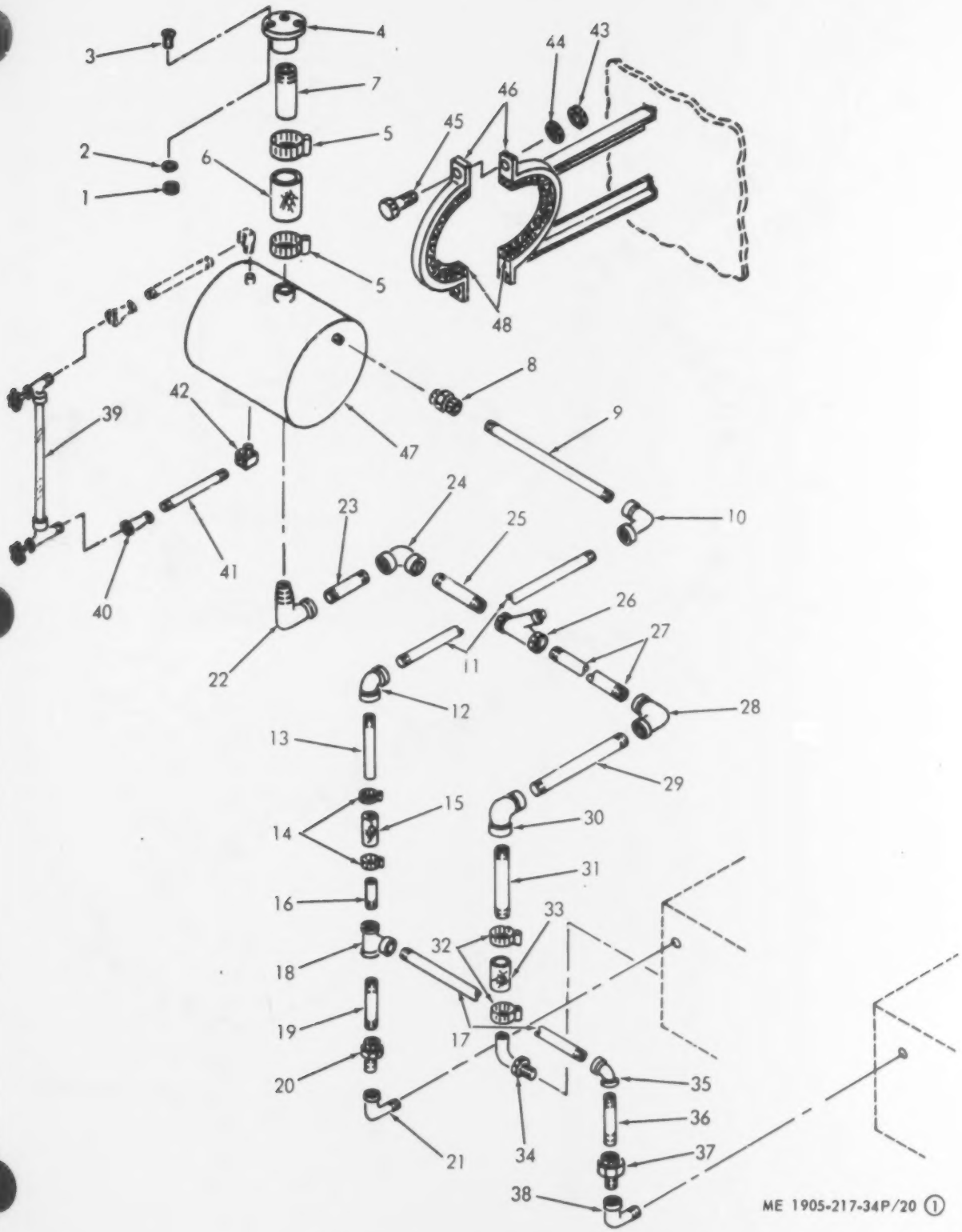

Figure 20. Engine Cooling Piping (Sheet 1 of 2)

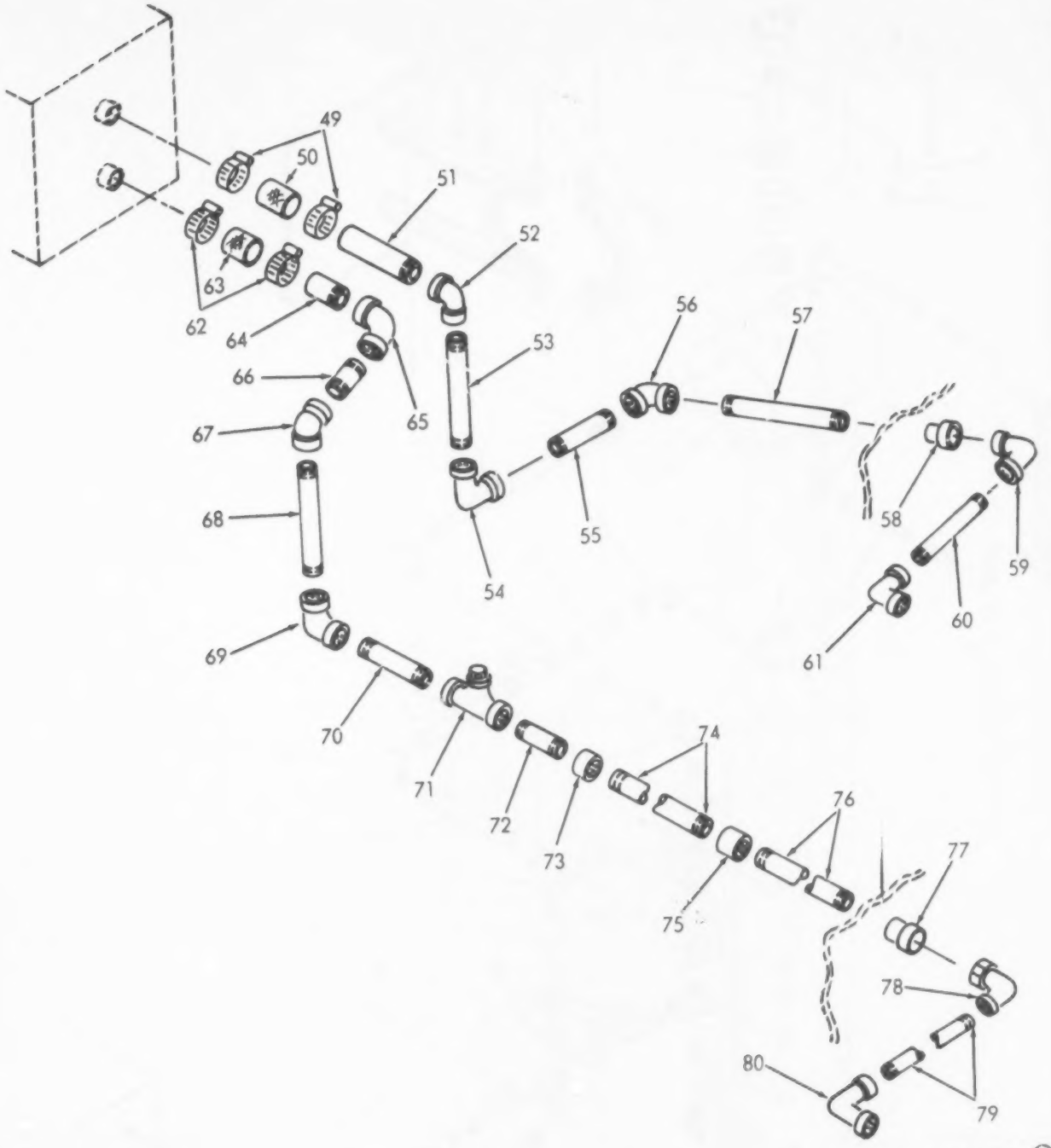

Figure 20. Engine Cooling Piping (Sheet 2 of 2)

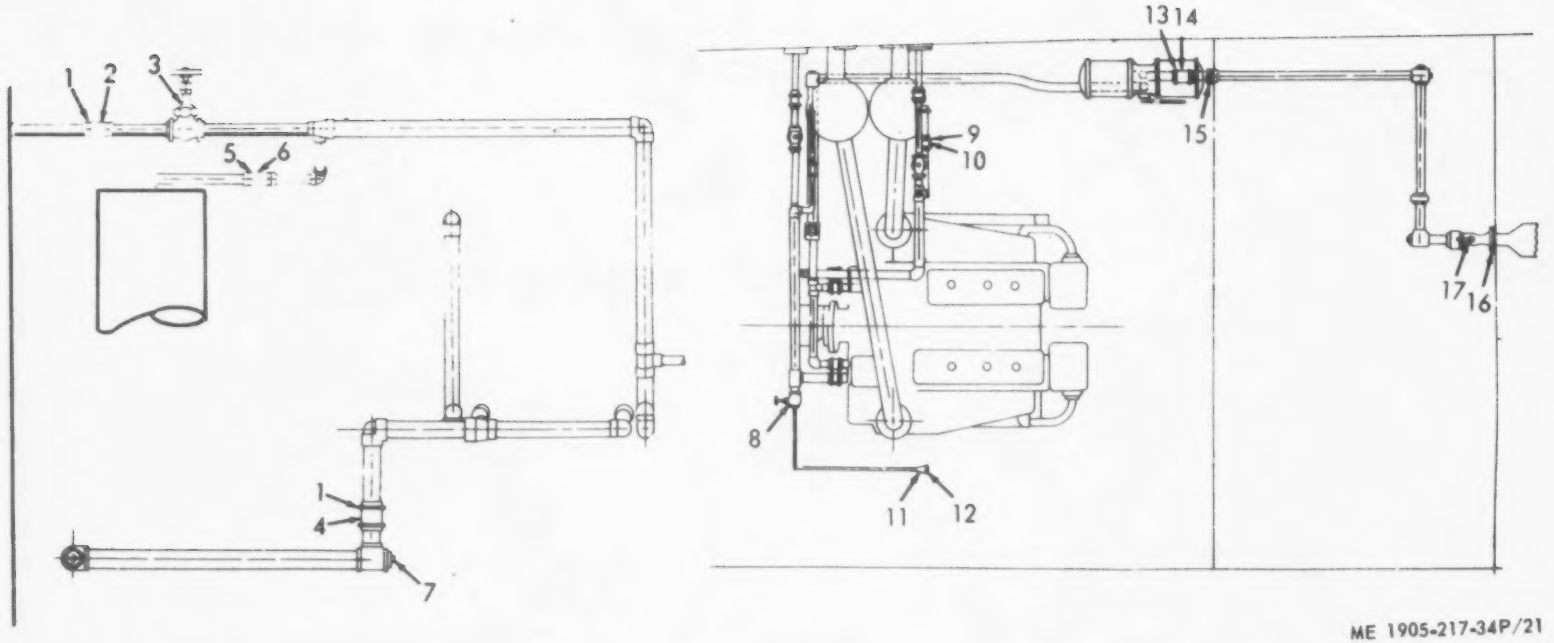

ME 1905-217-34P/21

Figure 21. Sea Water Piping (Sheet 1 of 4)

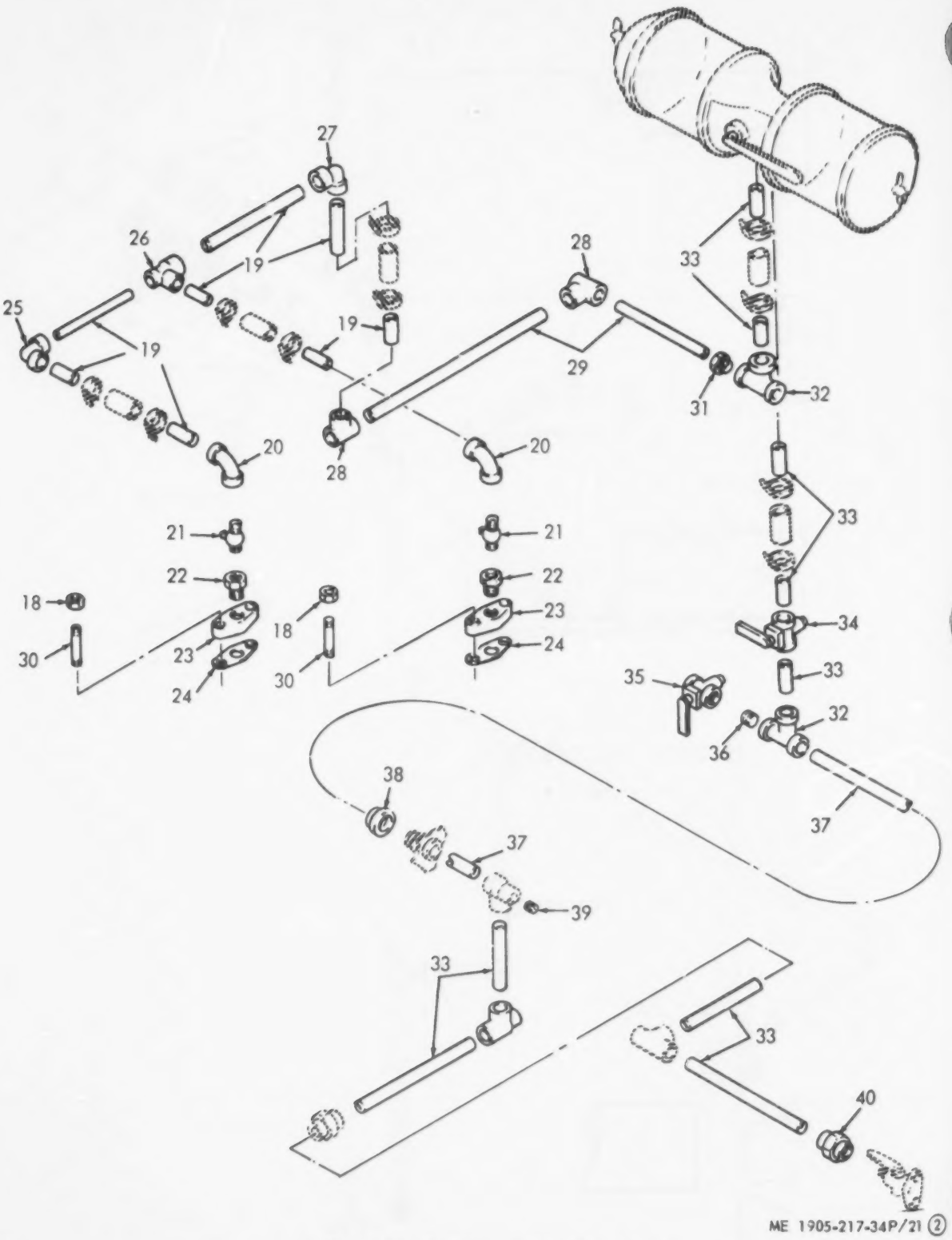

ME 1905-217-34P/21 ②

Figure 21. Sea Water Piping (Sheet 2 of 4)

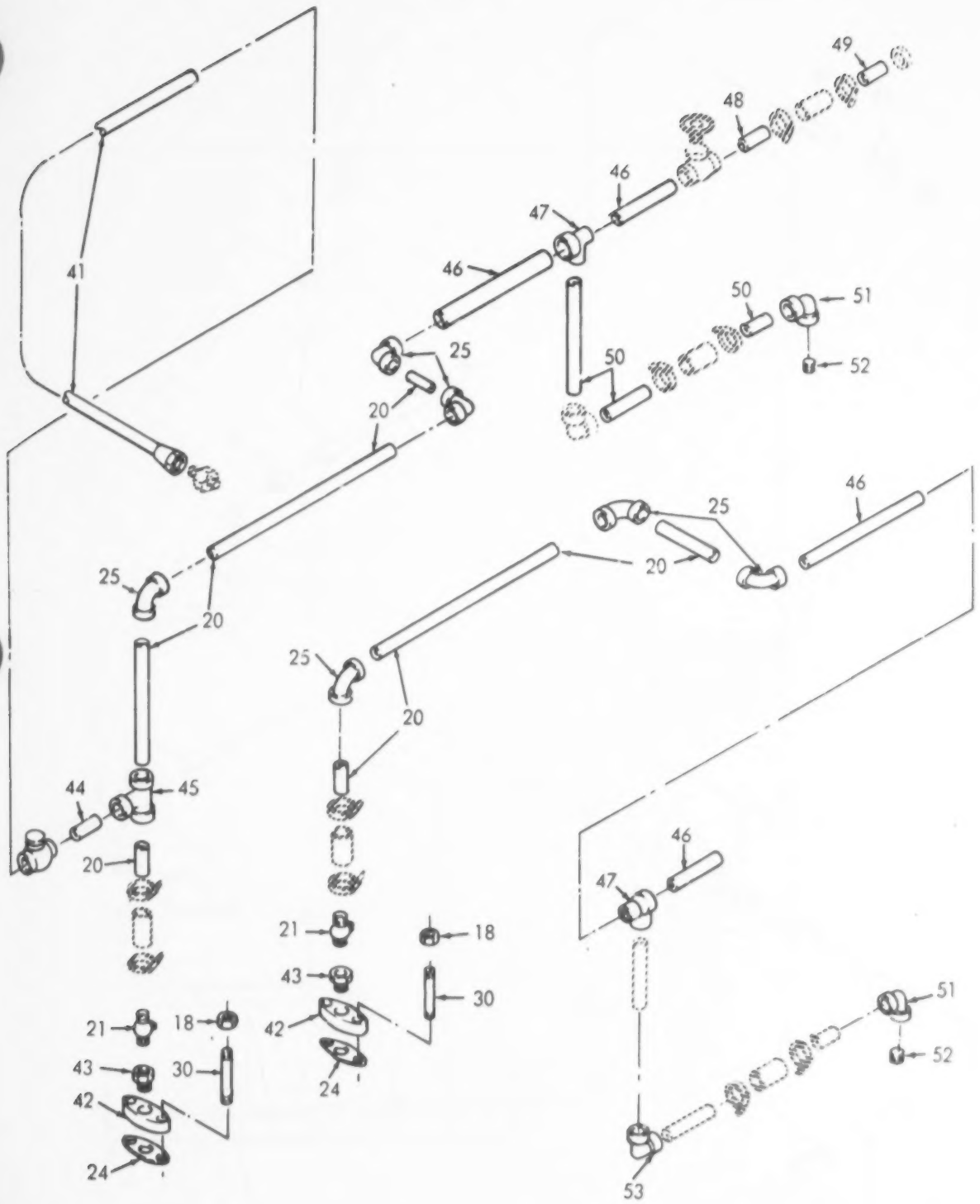

ME 1905-217-34P/21 (3)

163

Figure 21. Sea Water Piping (Sheet 3 of 4)

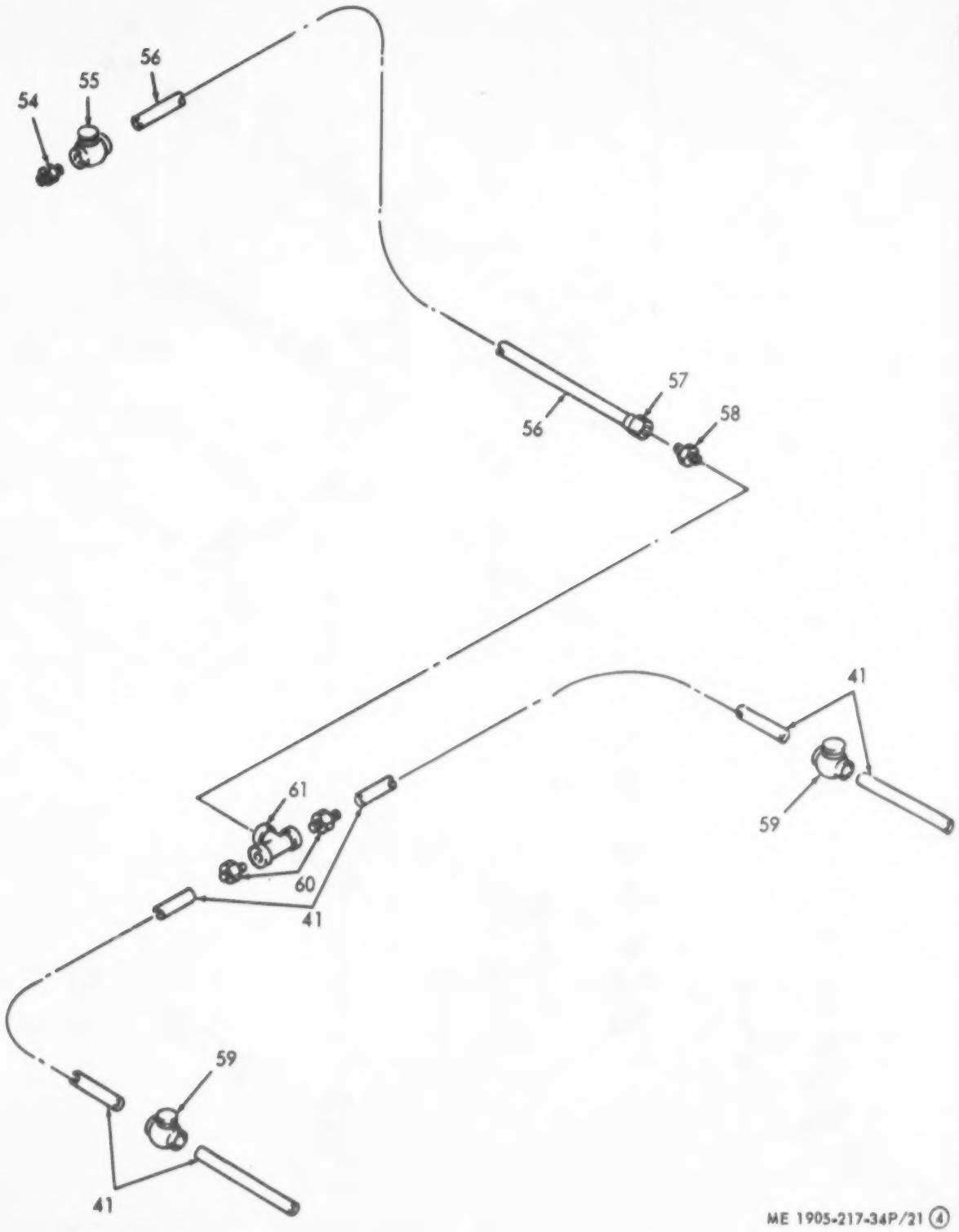

Figure 21. Sea Water Piping (Sheet 4 of 4)

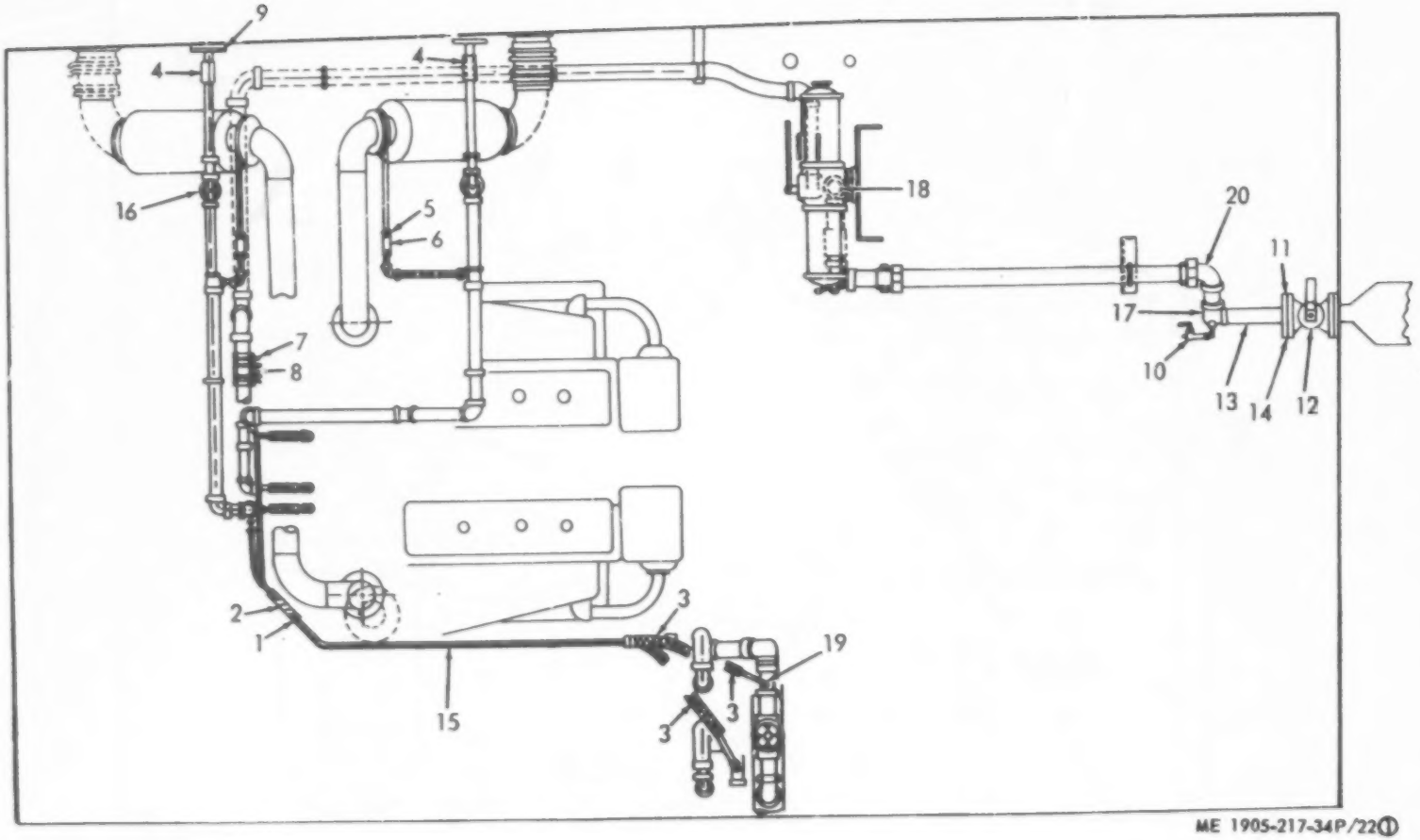

Figure 22. Sea Water Piping (Sheet 1 of 2)

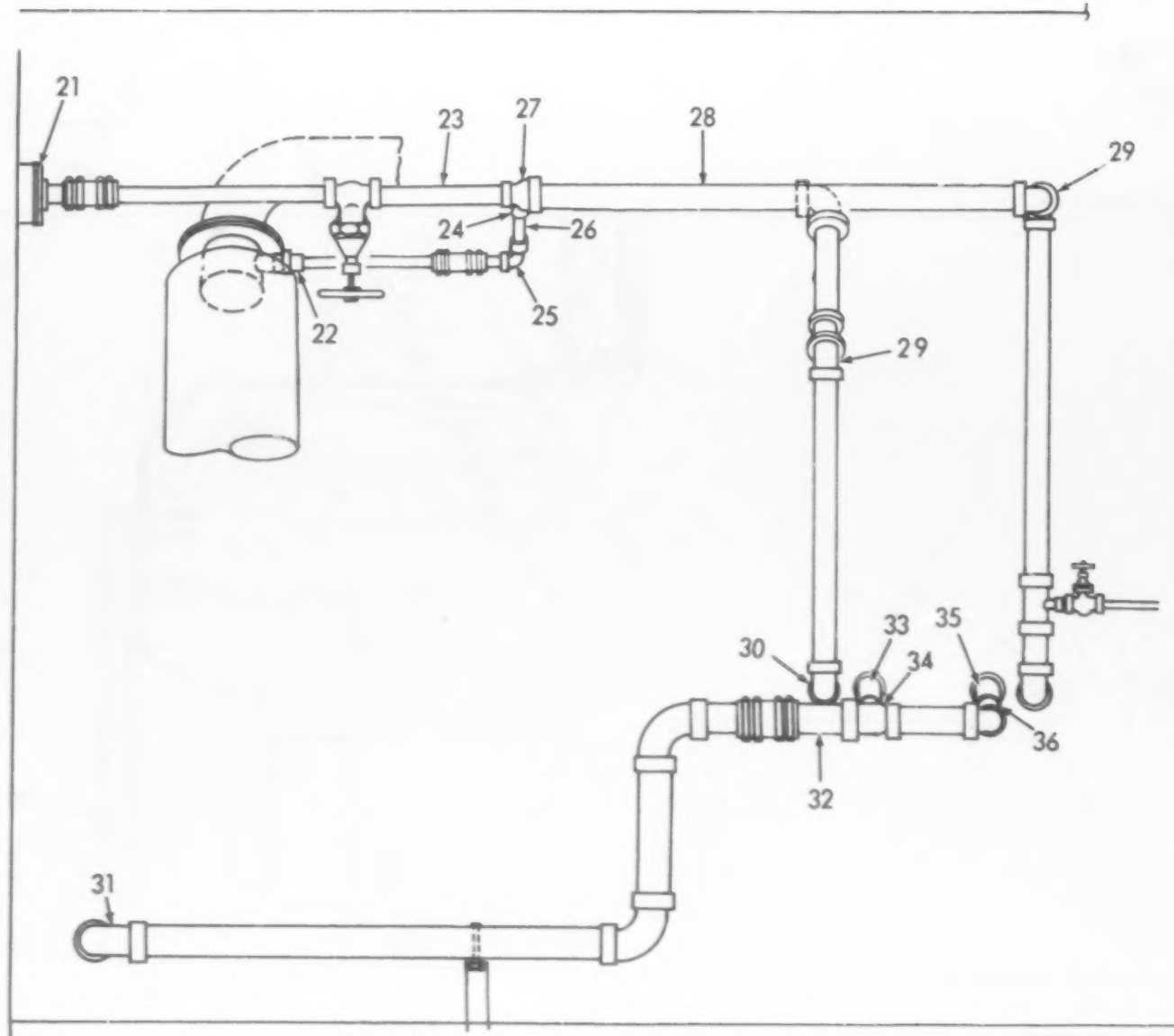

Figure 22. Sea Water Piping (Sheet 2 of 2)

ME 1905-217-34P/22

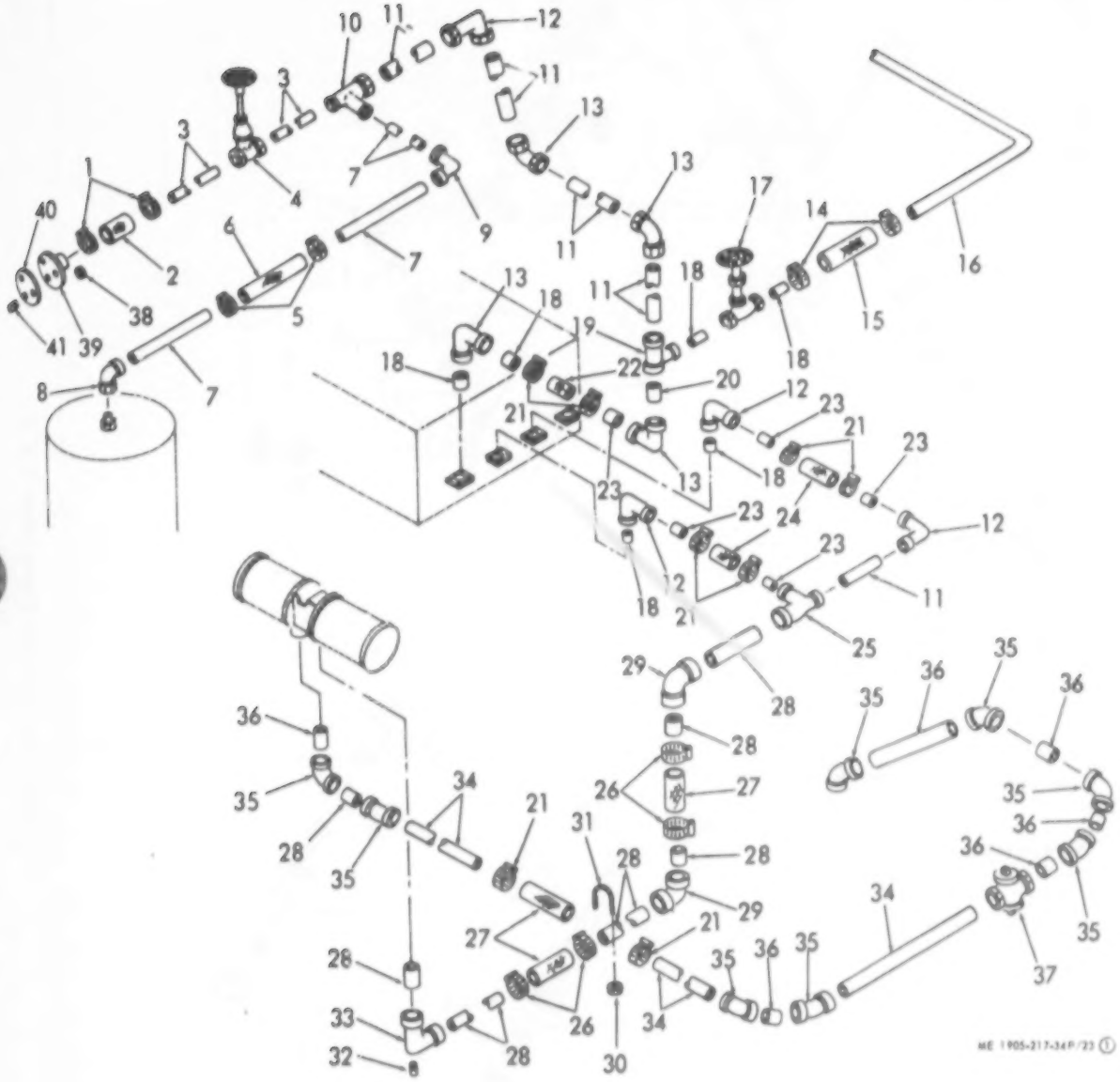

Figure 23. Sea Water Piping (Sheet 1 of 2)

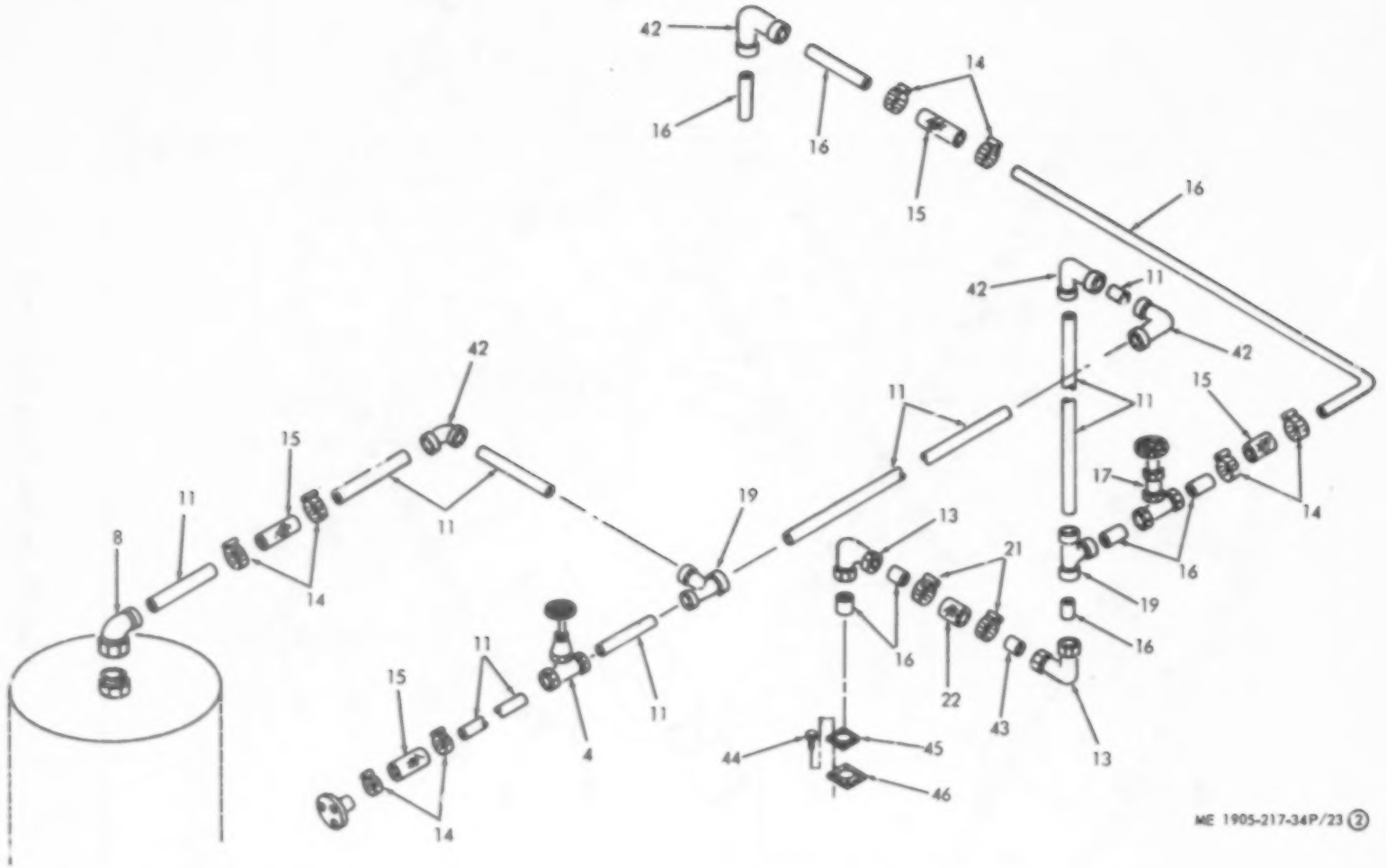

Figure 23. Sea Water Piping (Sheet 2 of 2)

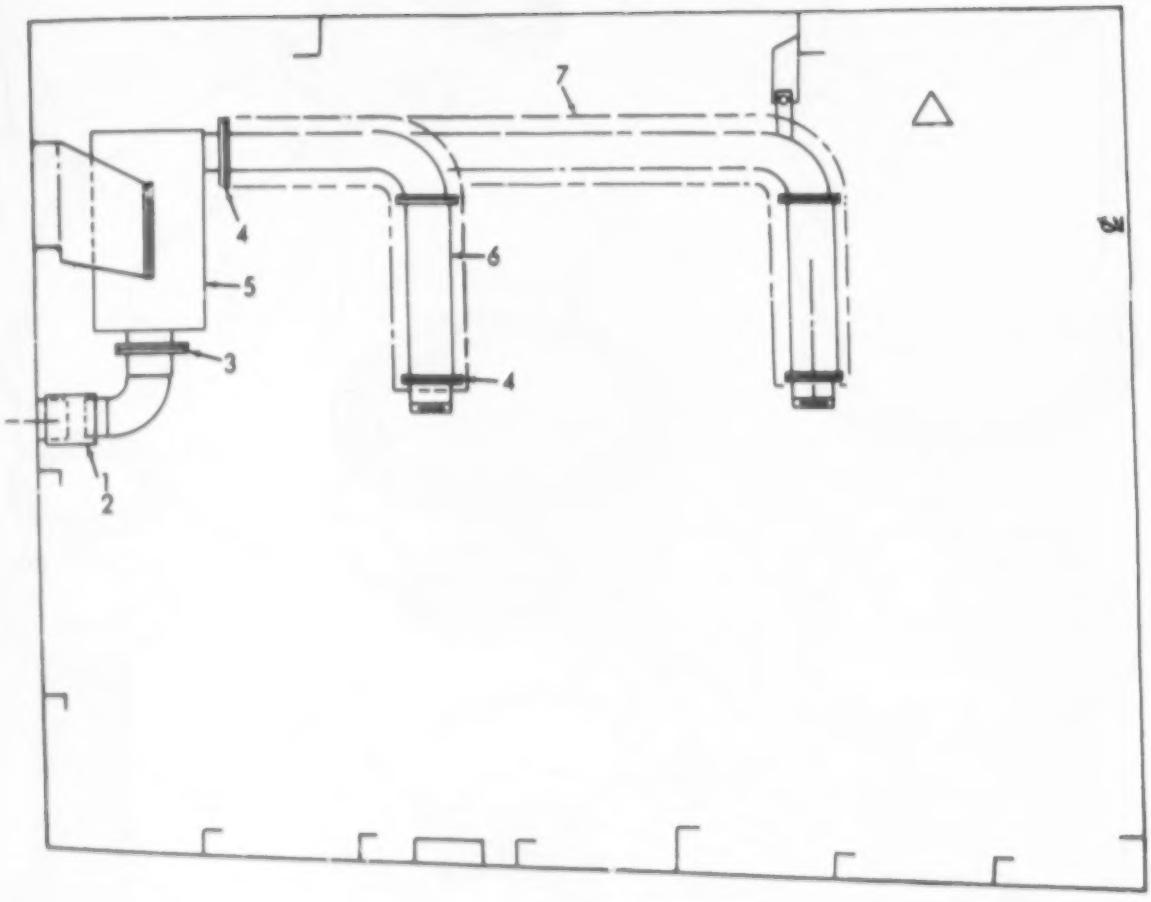

ME 1905-217-34P/24

Figure 24. Muffler and Exhaust Piping

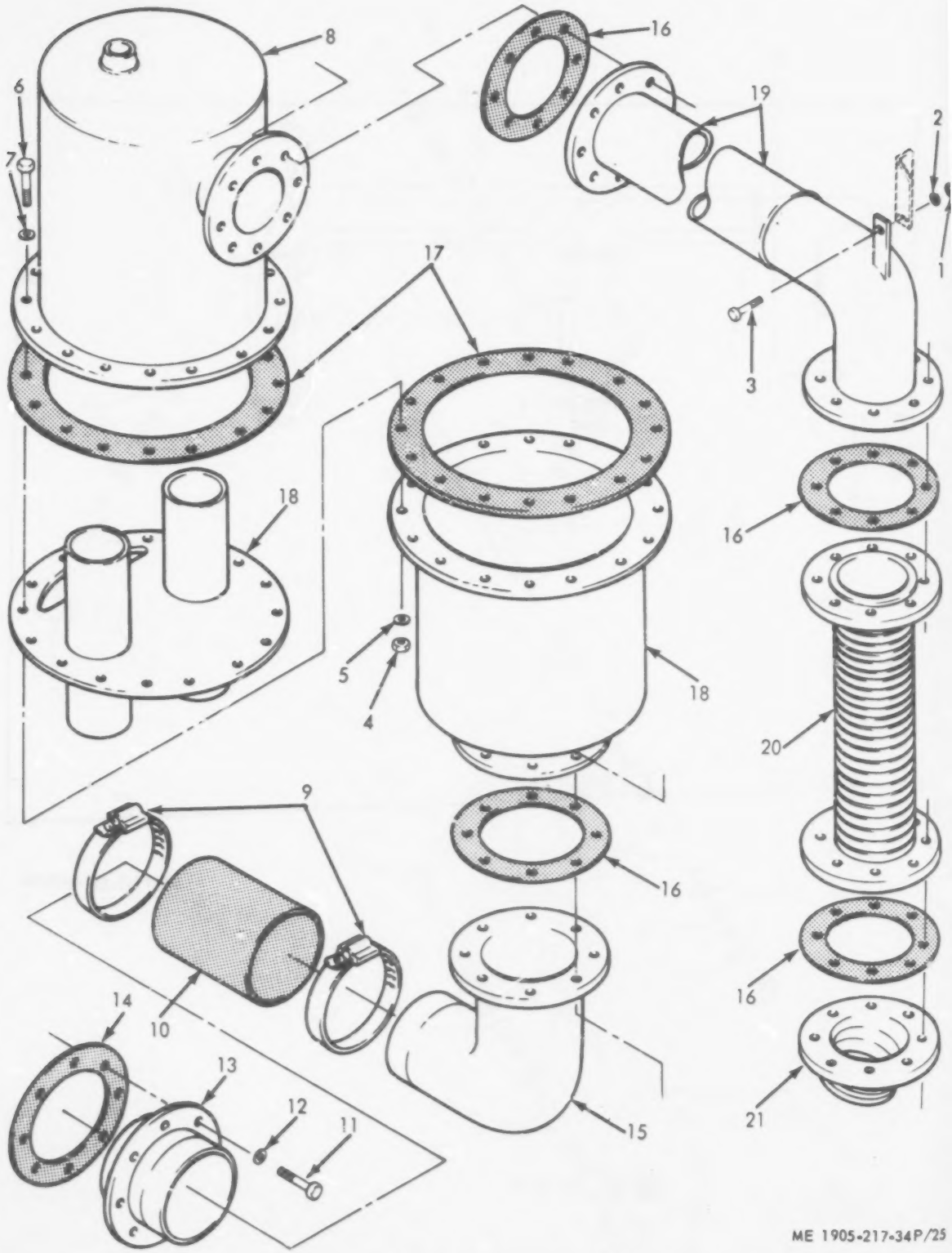

ME 1905-217-34P/25

Figure 25. Muffler and Exhaust Piping

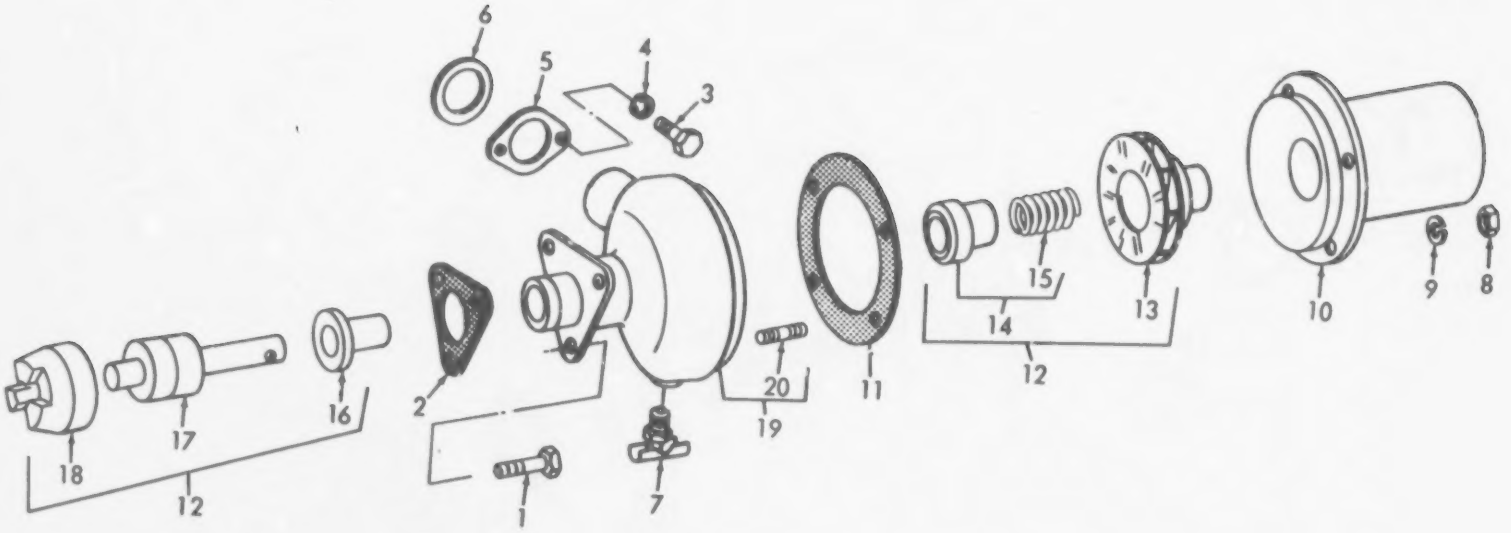

ME 1905-217-34P/26

Figure 26. Fresh Water Pump

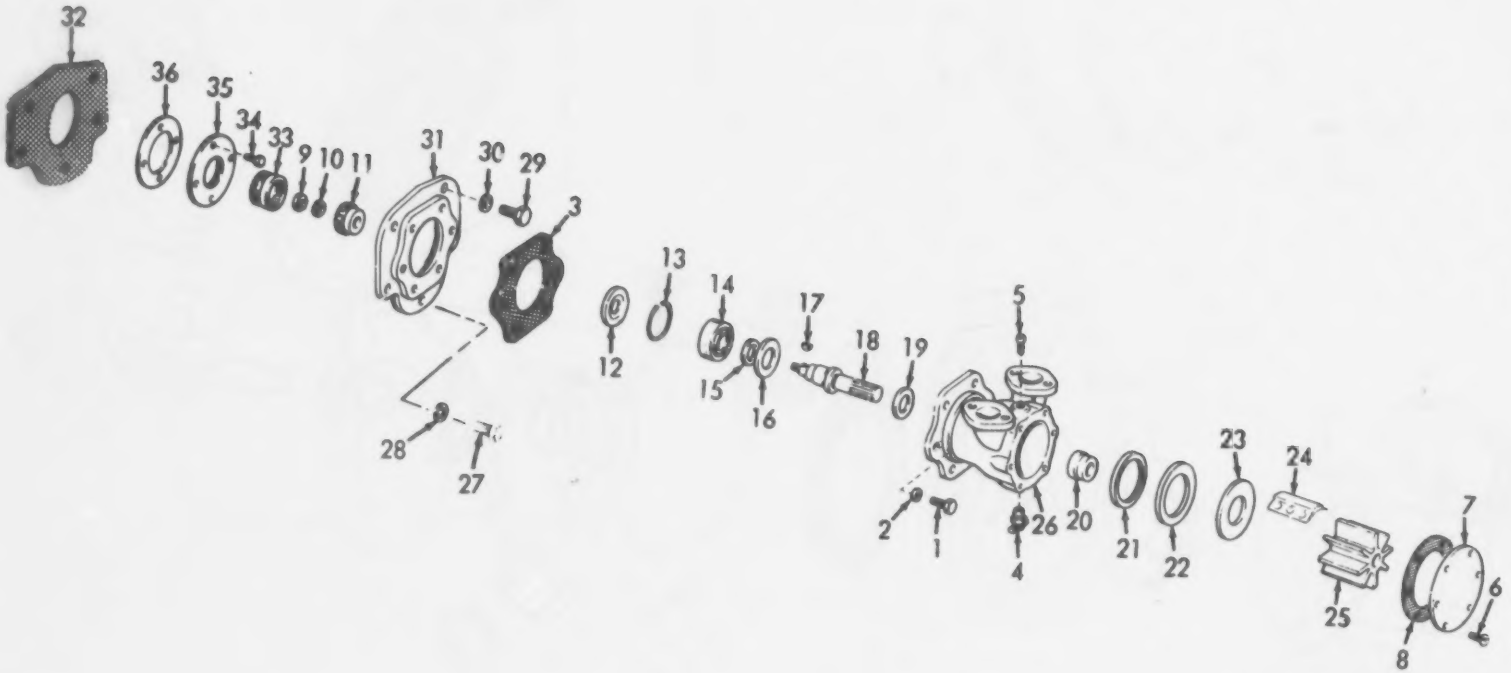

Figure 27. Raw Water Pump

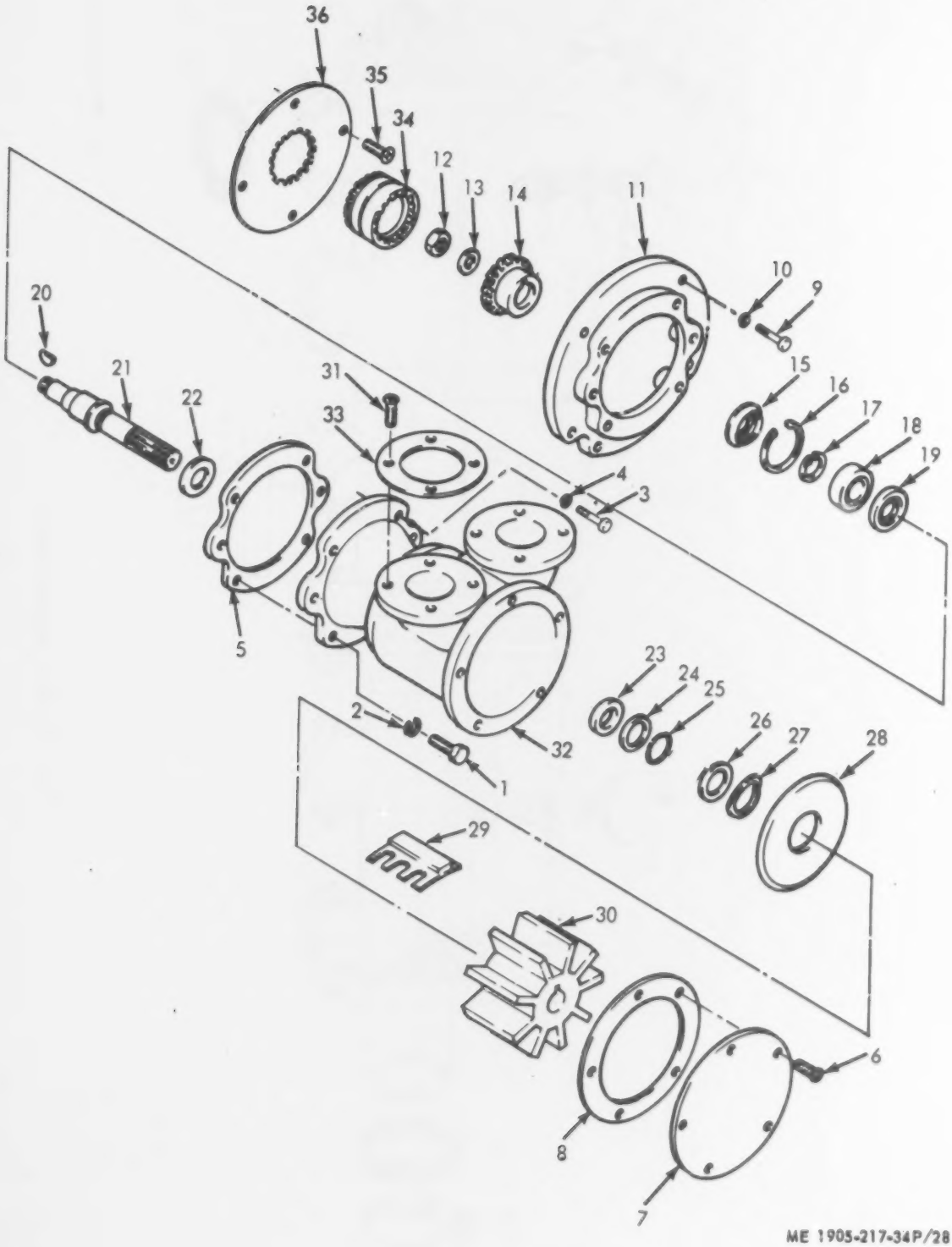

ME 1905-217-34P/28

Figure 28. Raw Water Pump

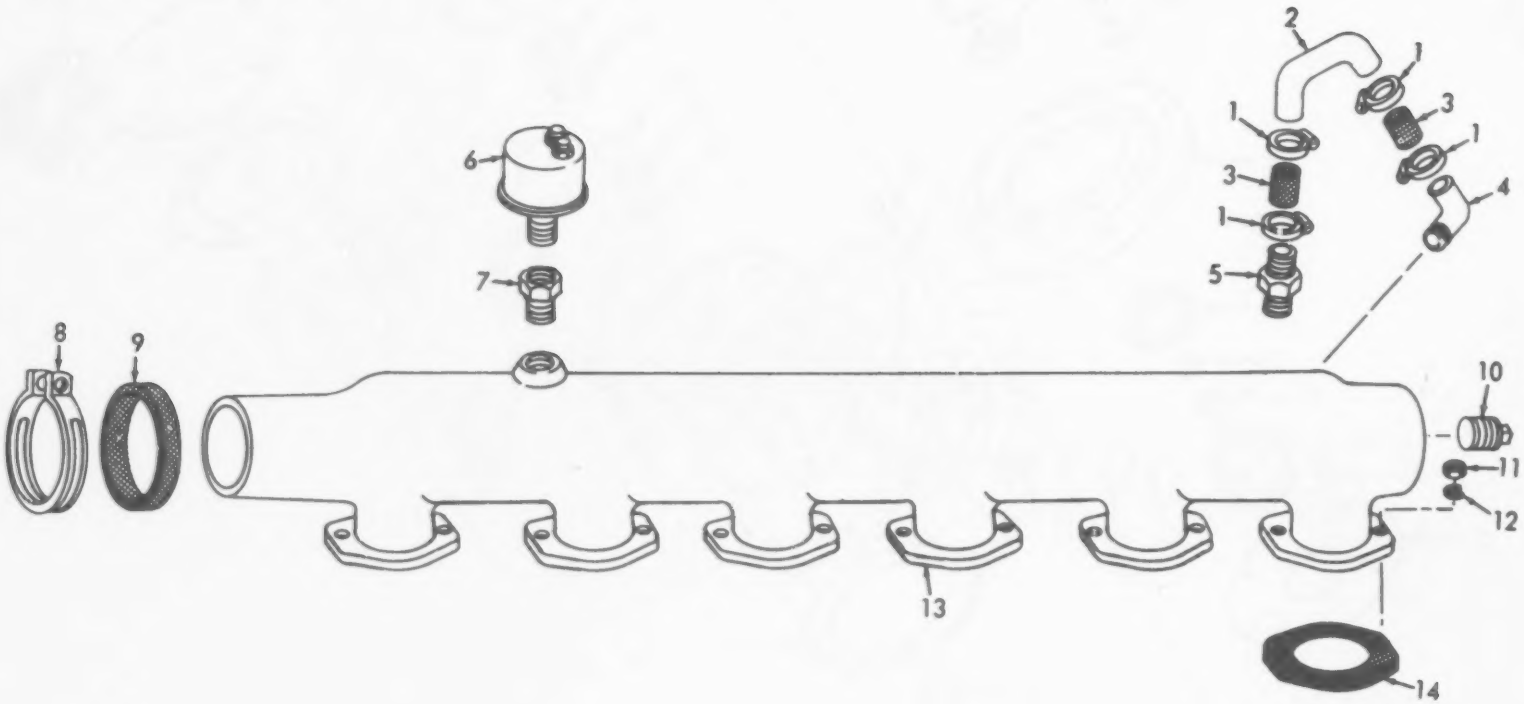

ME 1905-217-34P/29

Figure 29. Water Manifold, Engine

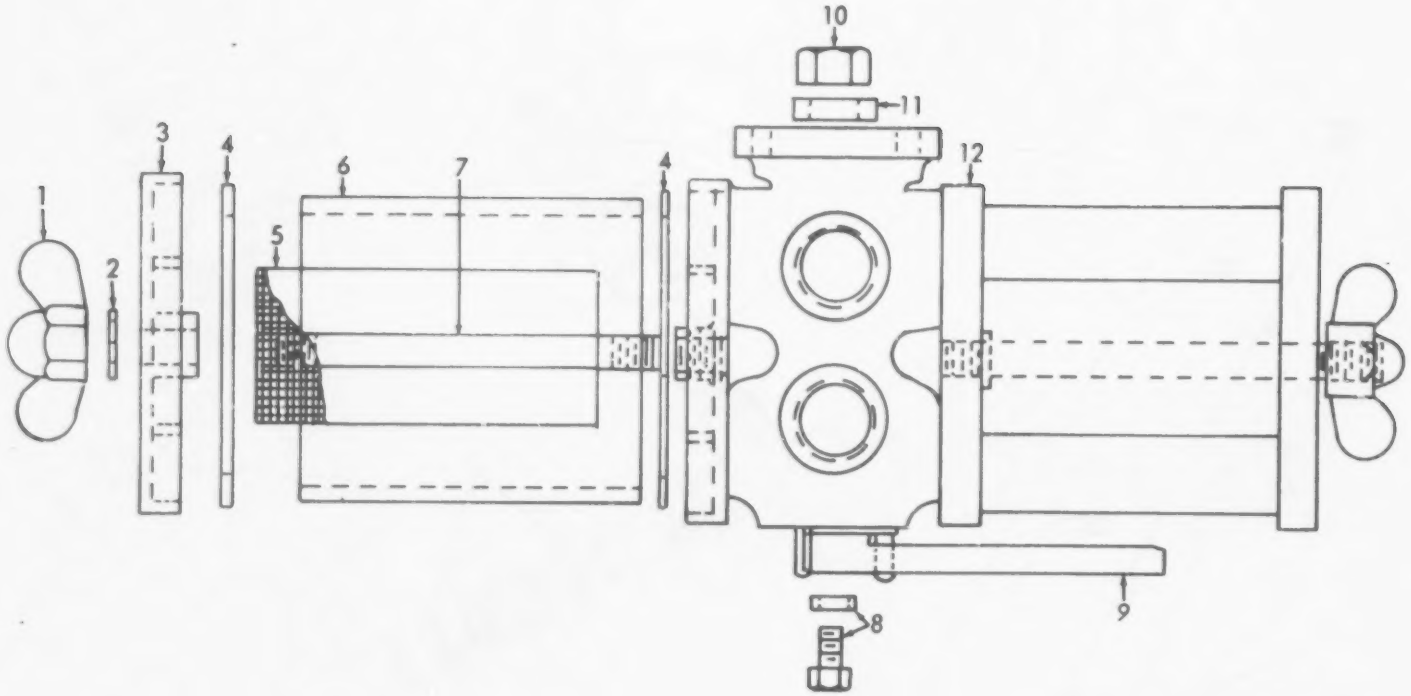

ME 1905-217-34P/30

Figure 30. Sea Water Strainer

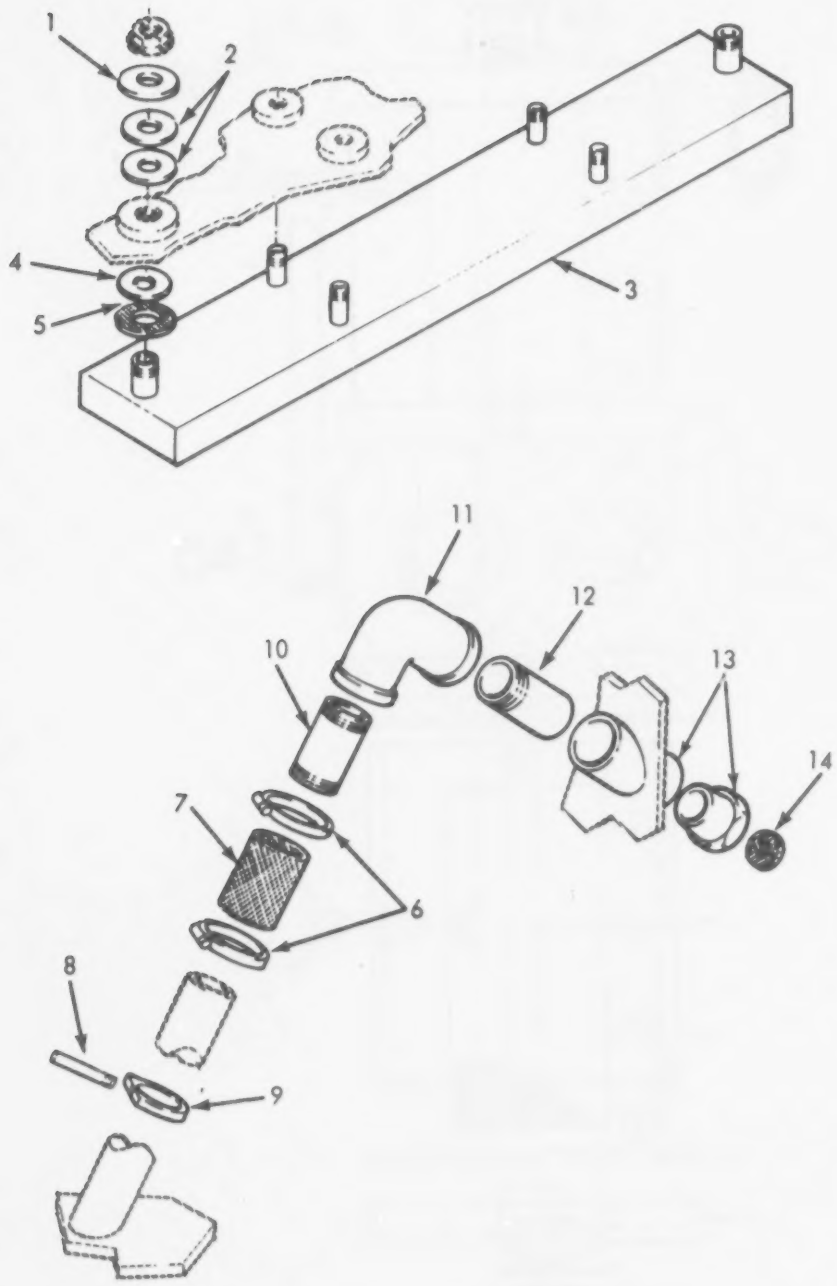

ME 1905-217-34P/32

Figure 32. Keel Cooler

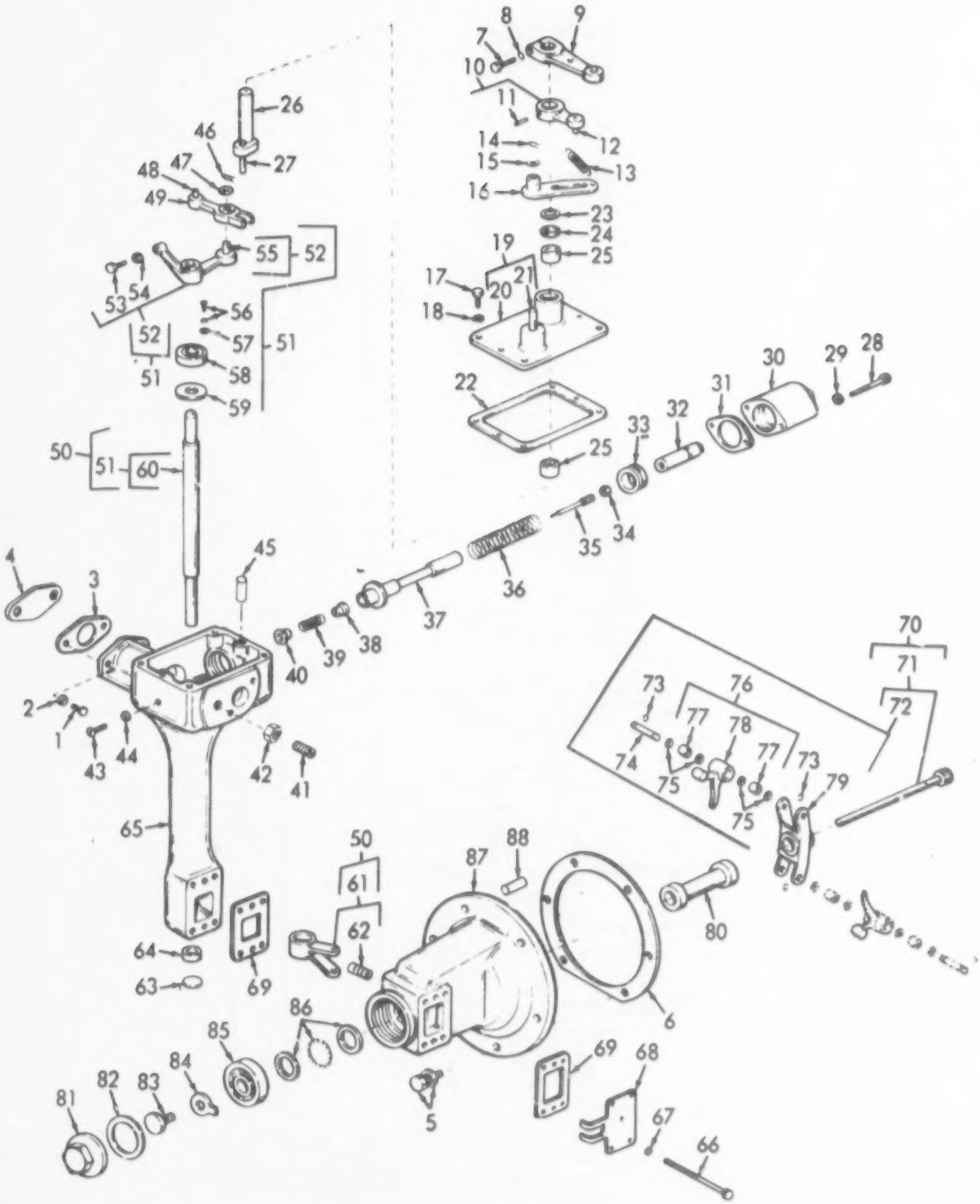

Figure 33. Transmission Oil Filter

ME 1905-217-34P/33

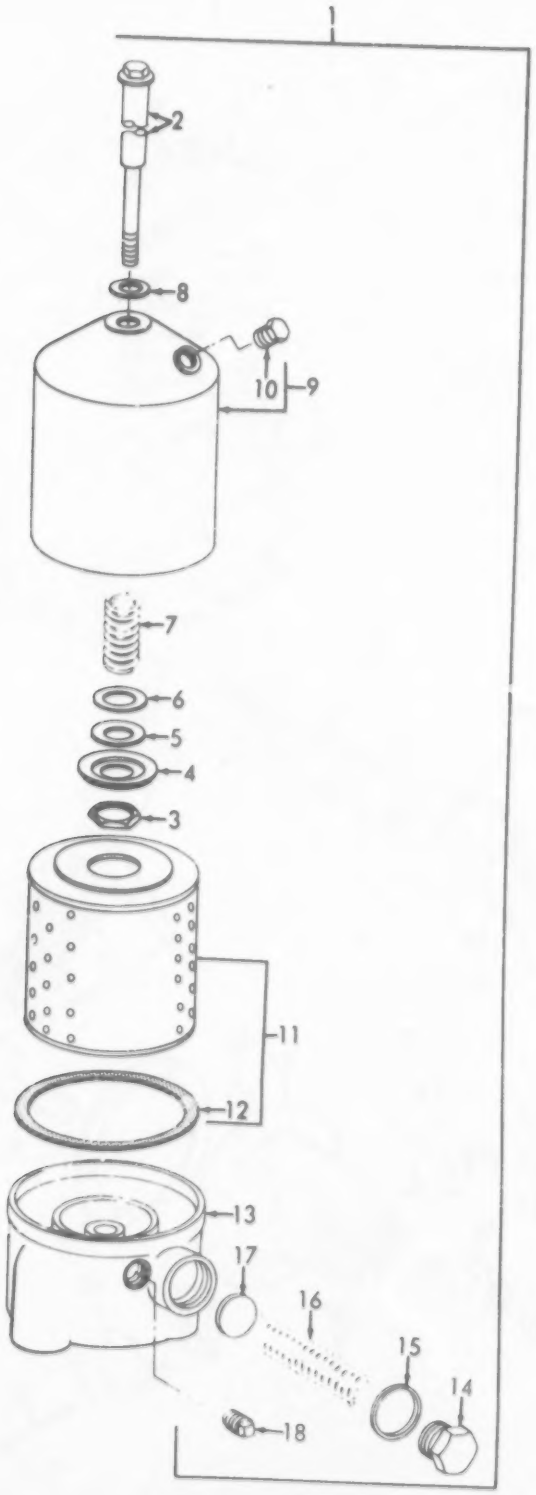

Figure 36. Transmission Oil Filter

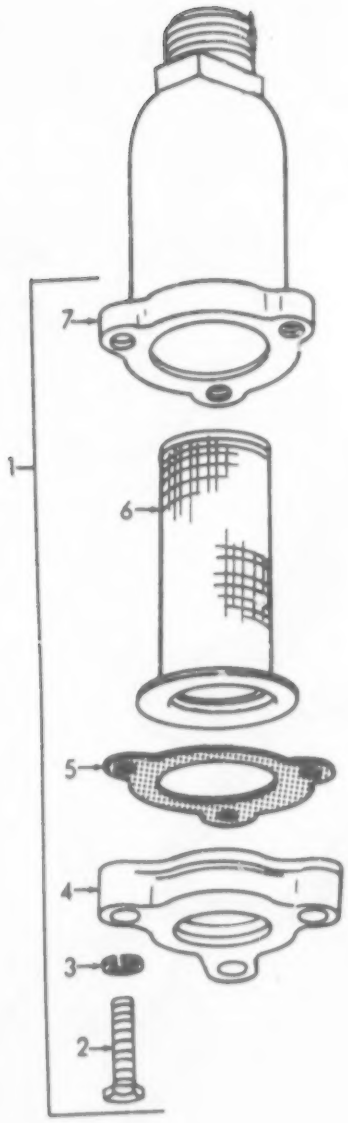

Figure 37. Transmission Oil Strainer

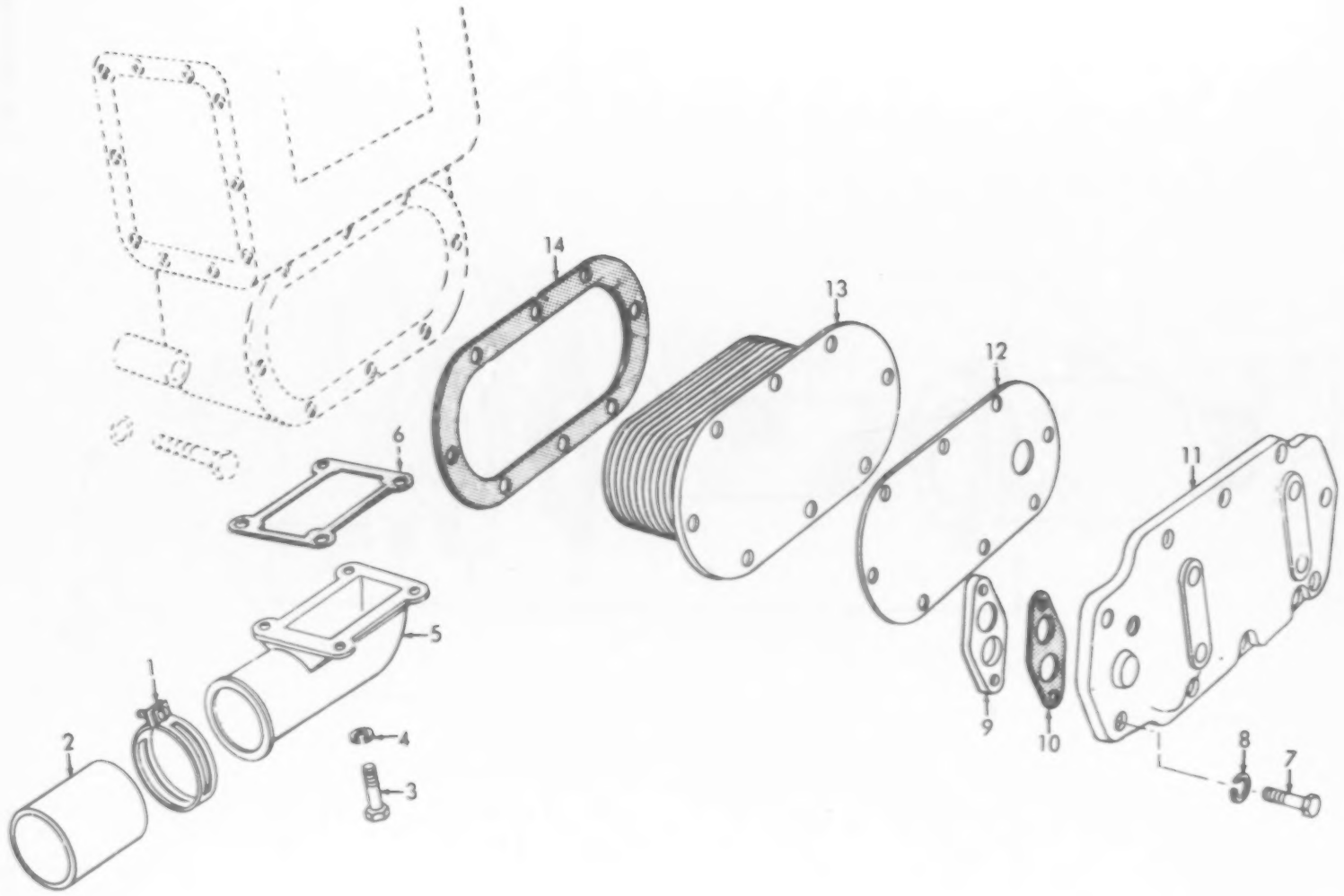
14
13
12
6
11
5
1
2
4
3
9
10
8
7

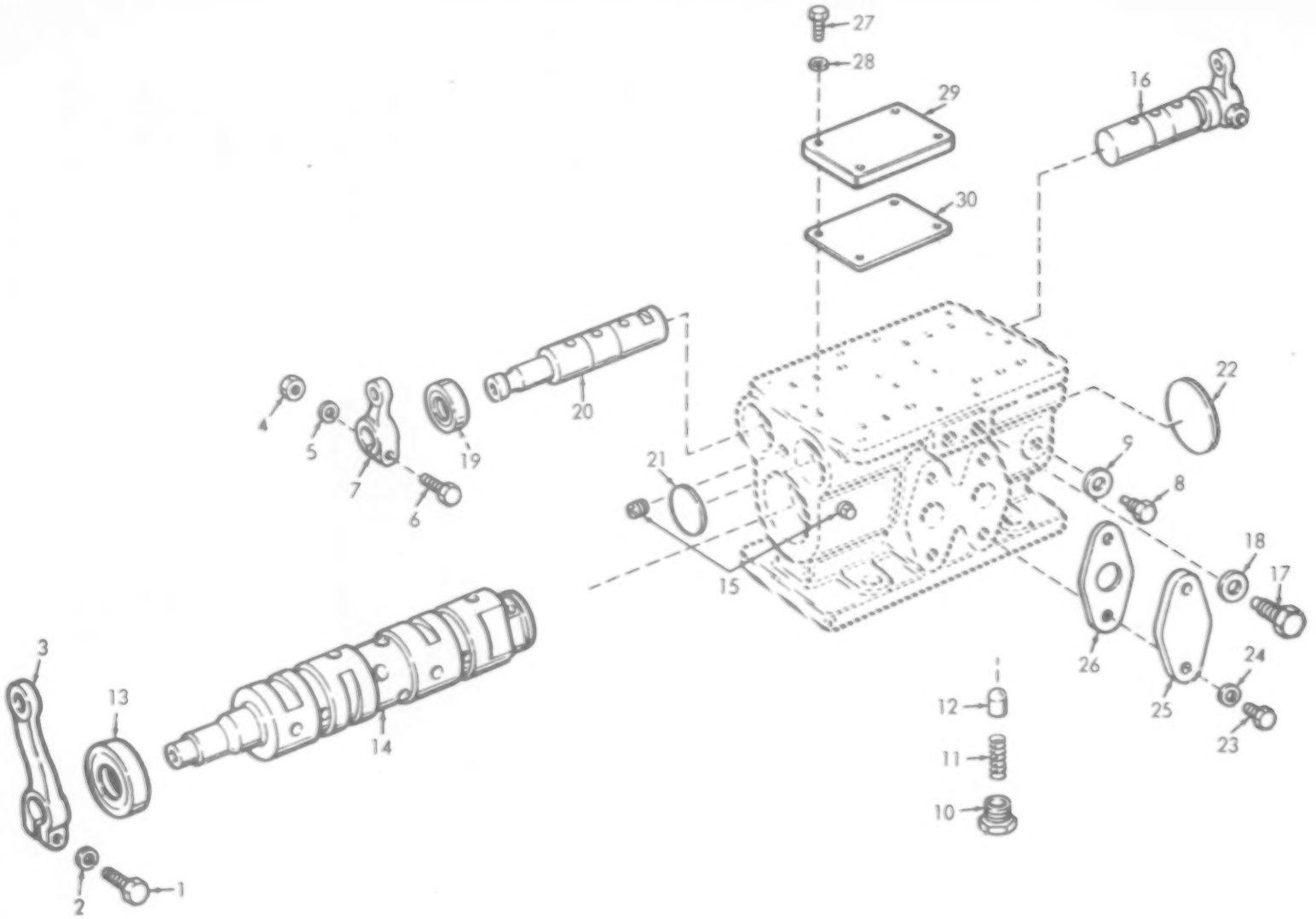

Figure 40. Transmission Control Valve

ME 1905-217-34P/40

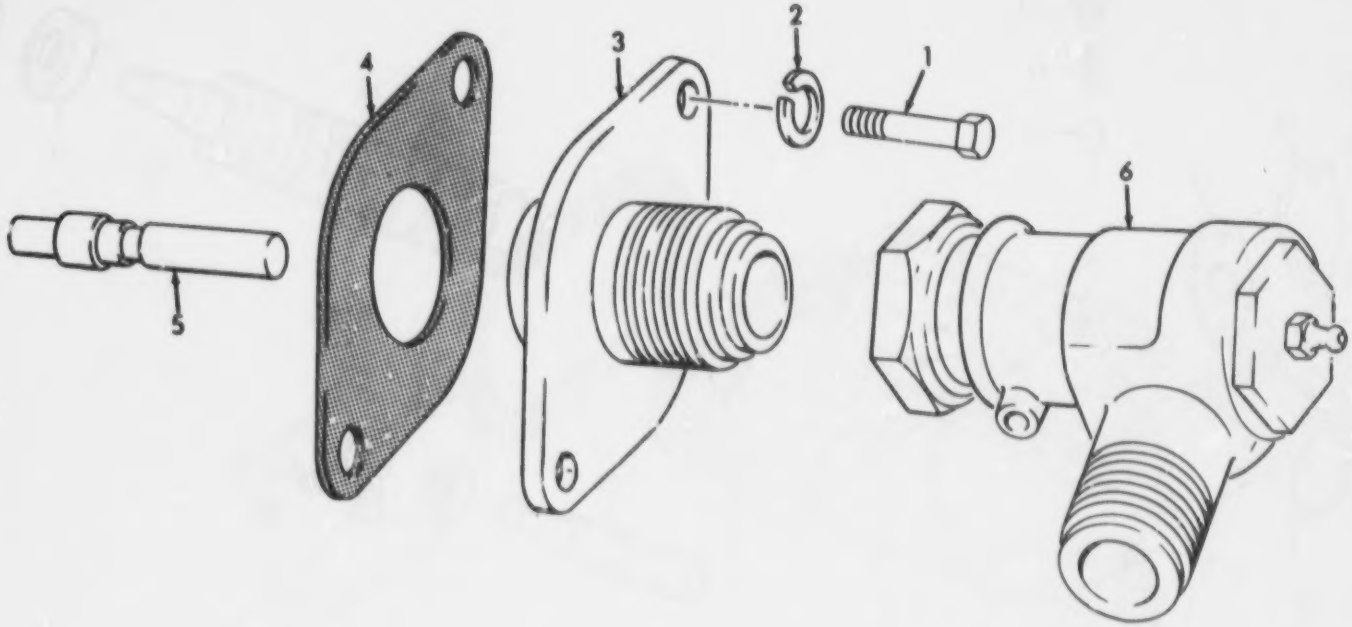

Figure 41. Tachometer Drive Cable, Adapter and Shaft

ME 1905-217-34P/41

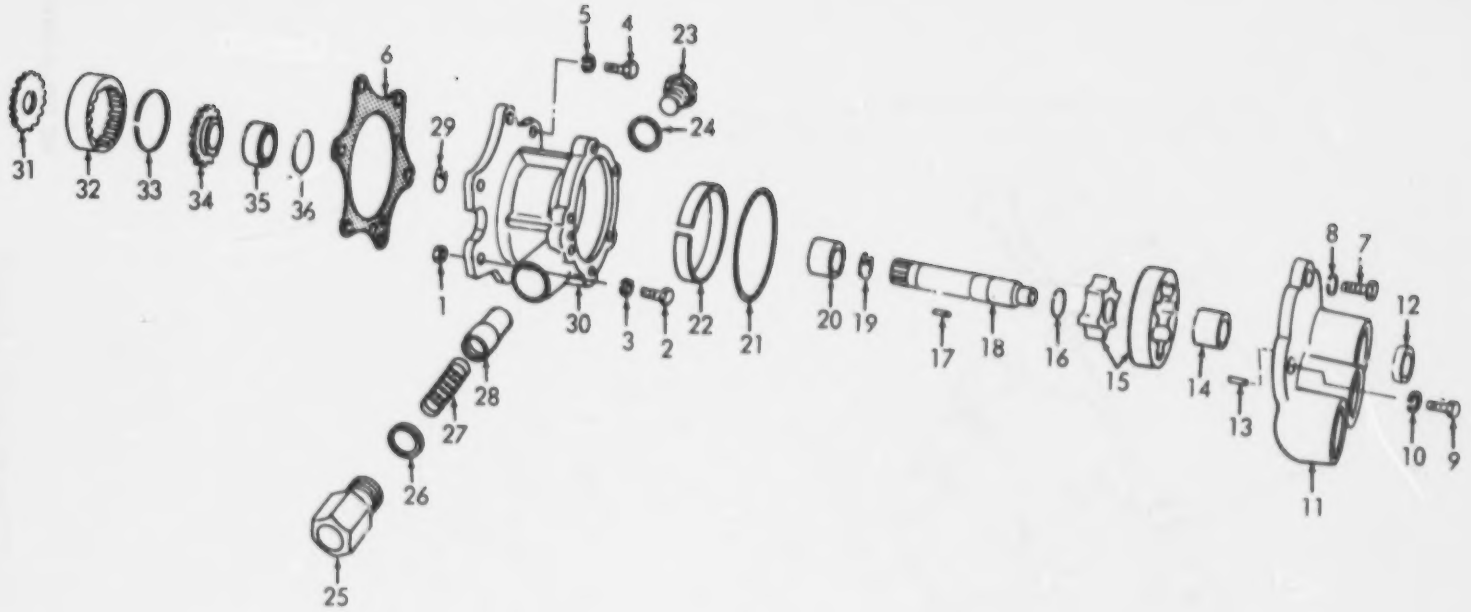

Figure 42. Transmission Oil Pump

ME 1905-217-34P/42

best copy available

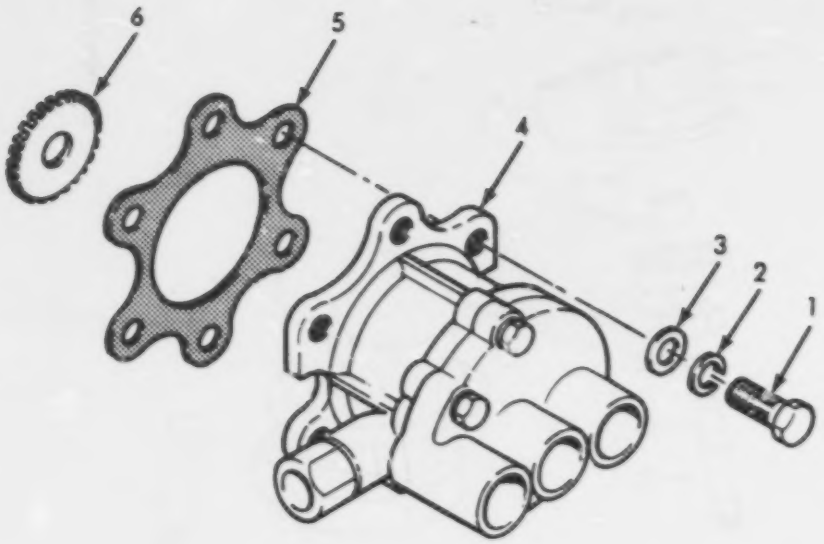

ME 1905-217-34P/43

Figure 43. Transmission Oil Pump and Lines

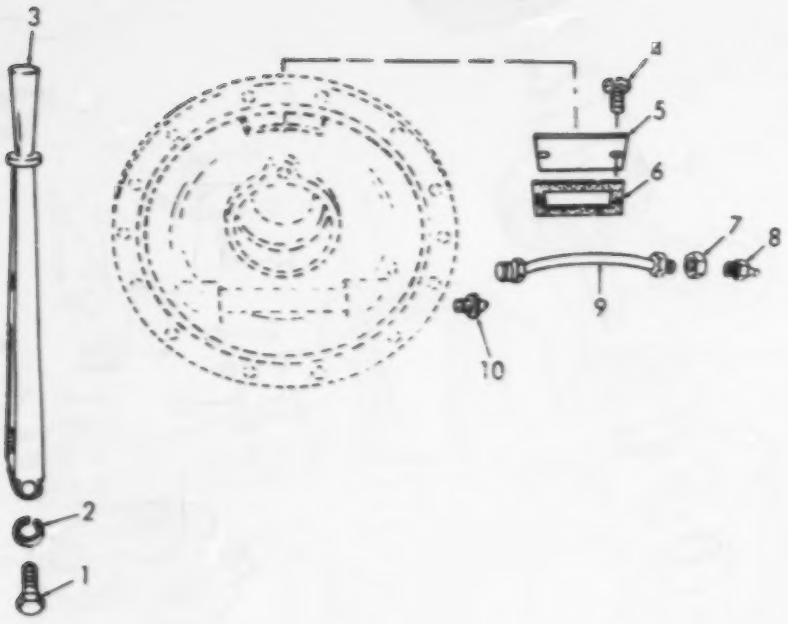

ME 1905-217-34P/45

Figure 45. Power Take-Off Cover and Control Lever

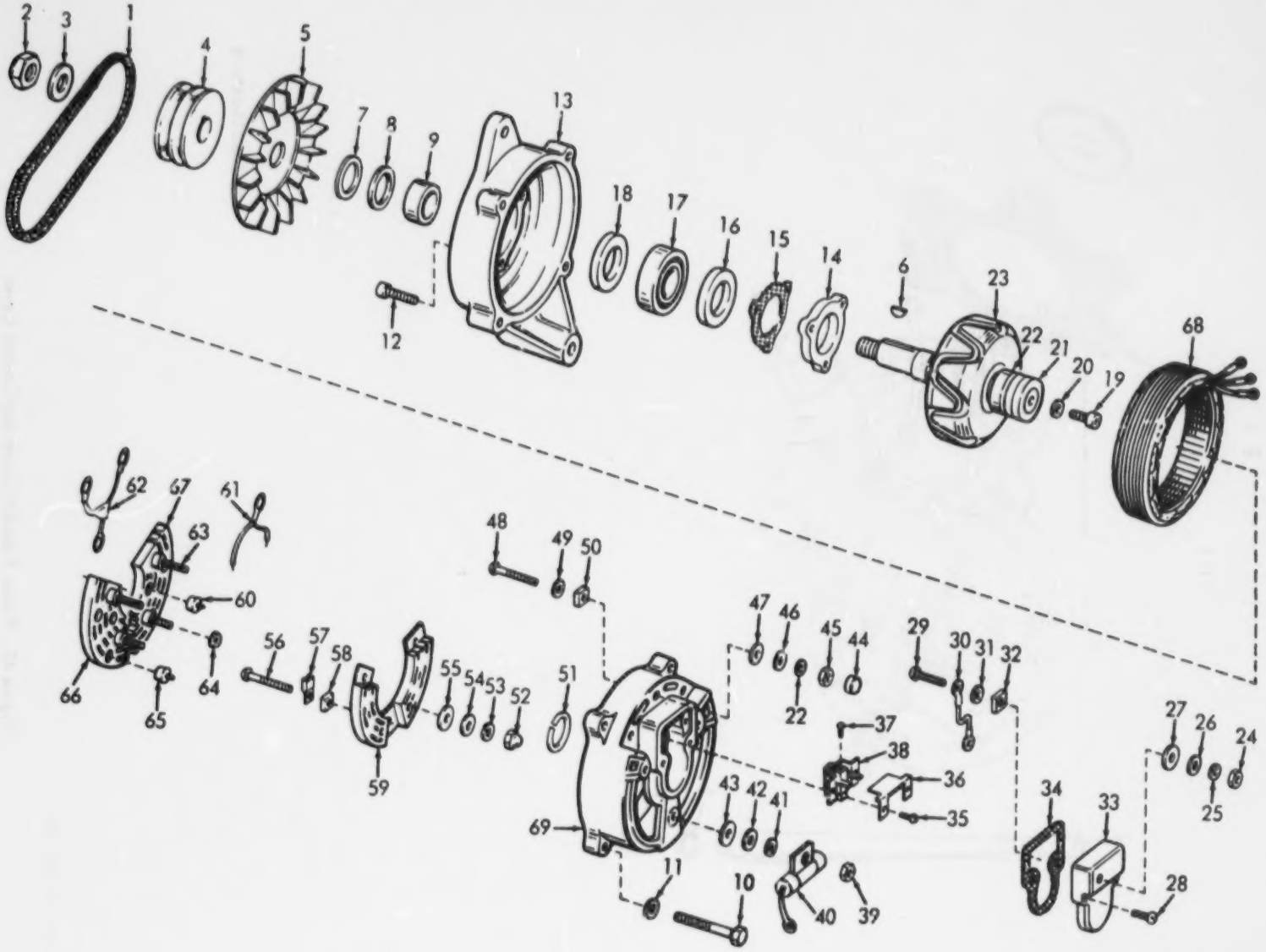

Figure 46. Alternator, Regulator and Voltage Protector

ME 1905-217-34P/46

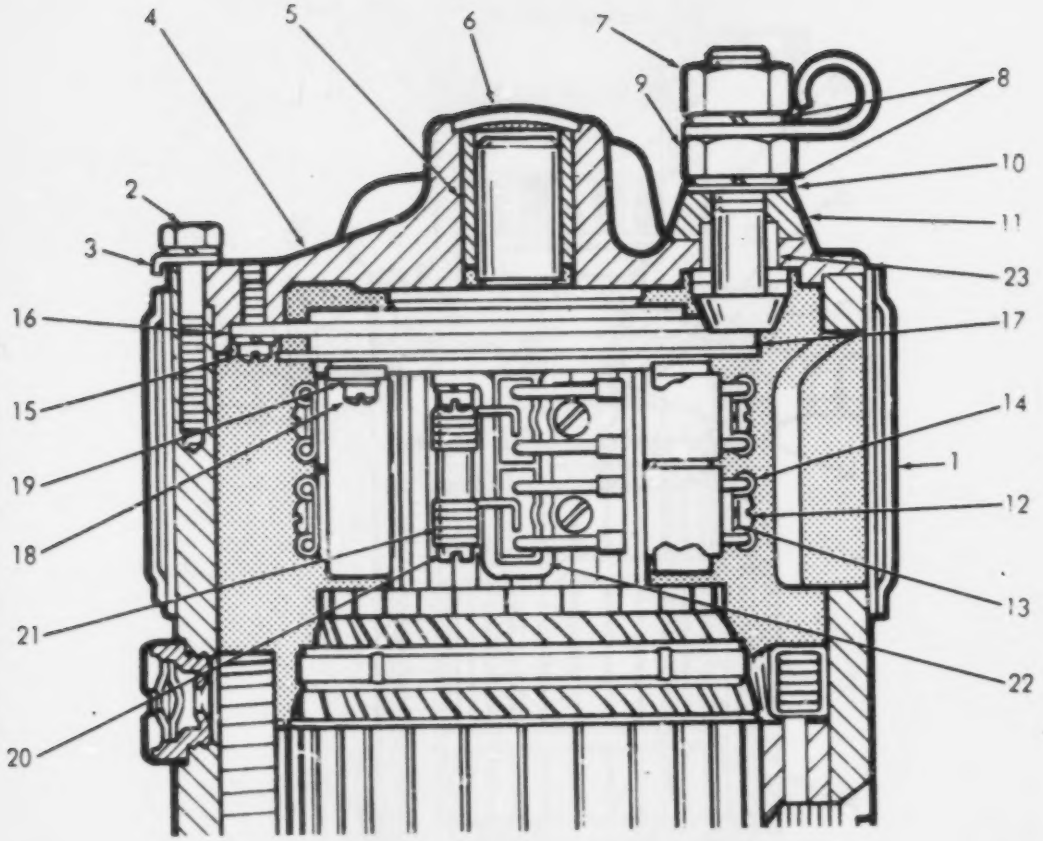

Figure 47. Electric Cranking Motor (Sheet 1 of 3)

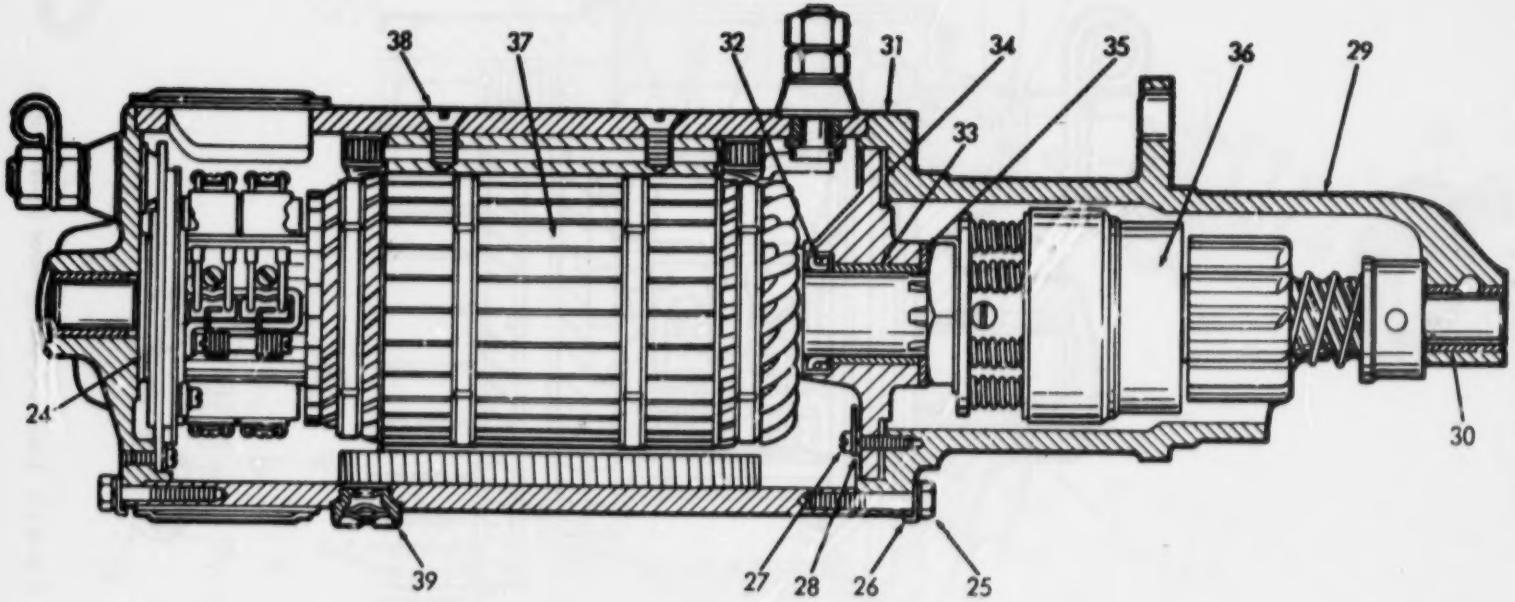

Figure 47. Electric Cranking Motor (Sheet 2 of 3)

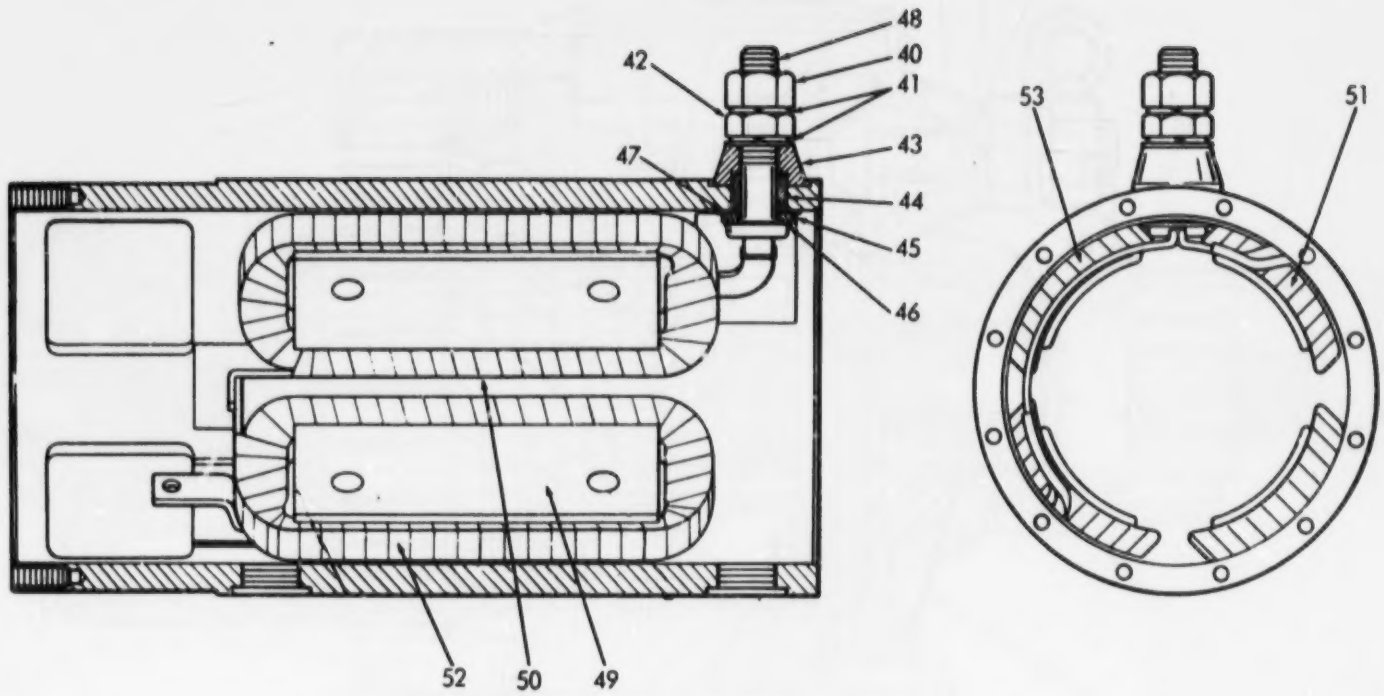

Figure 47. Electric Cranking Motor (Sheet 3 of 3)

ME 1905-217-34P/47 (3)

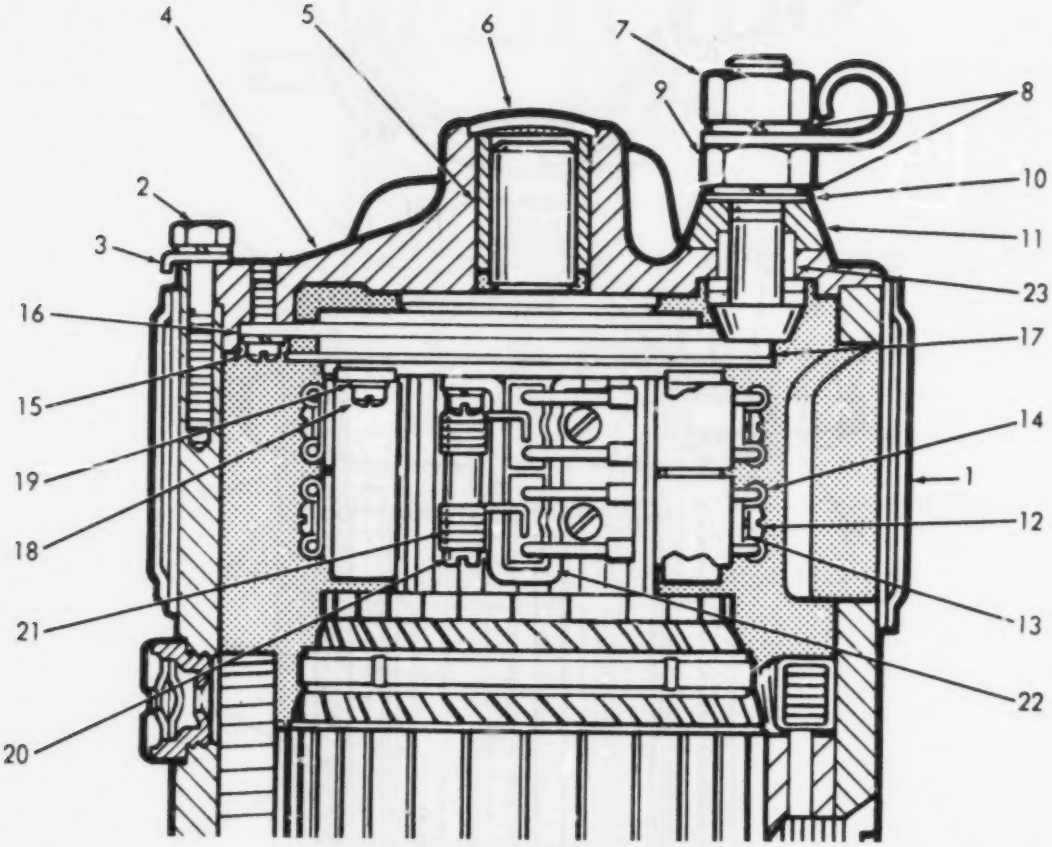

Figure 48. Electric Cranking Motor (Sheet 1 of 3)

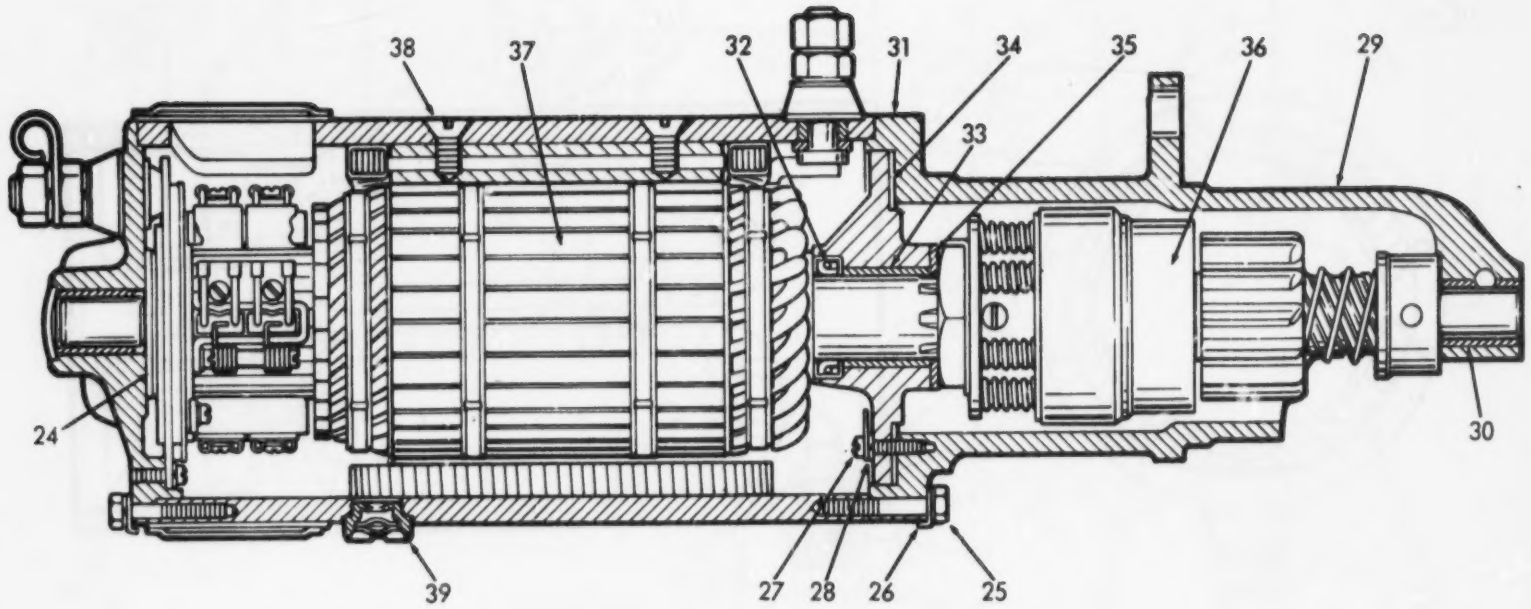

Figure 48. Electric Cranking Motor (Sheet 2 of 3)

ME 1905-217-34P/48 (2)

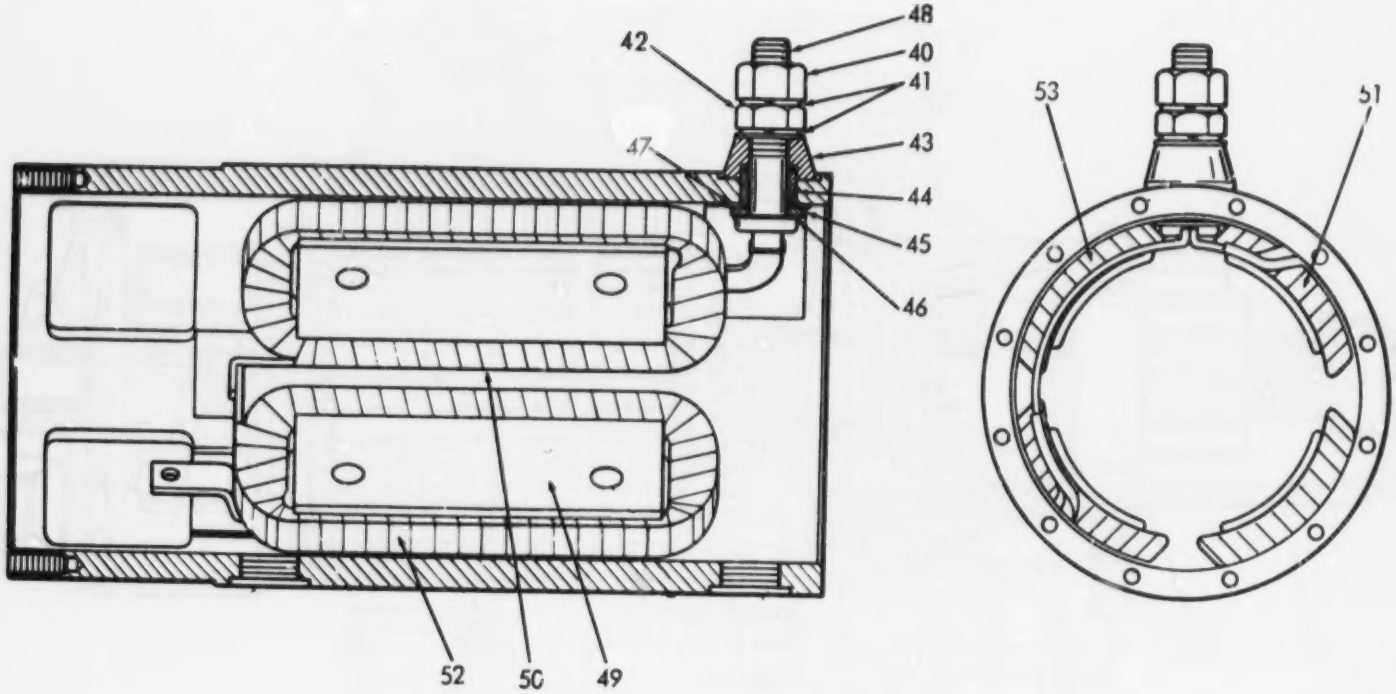

Figure 48. Electric Cranking Motor (Sheet 3 of 3)

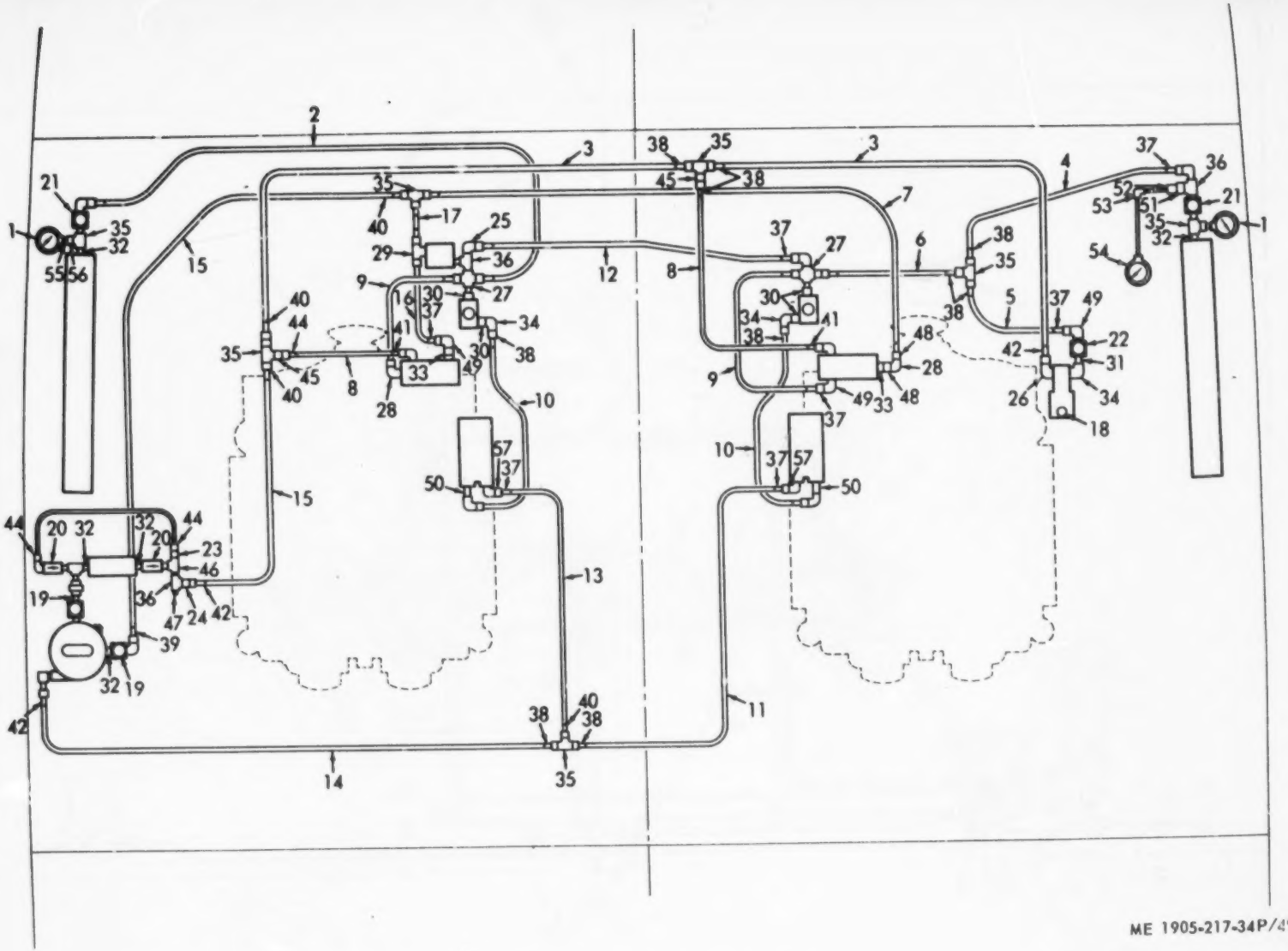

Figure 49. Hydraulic Starting Piping System

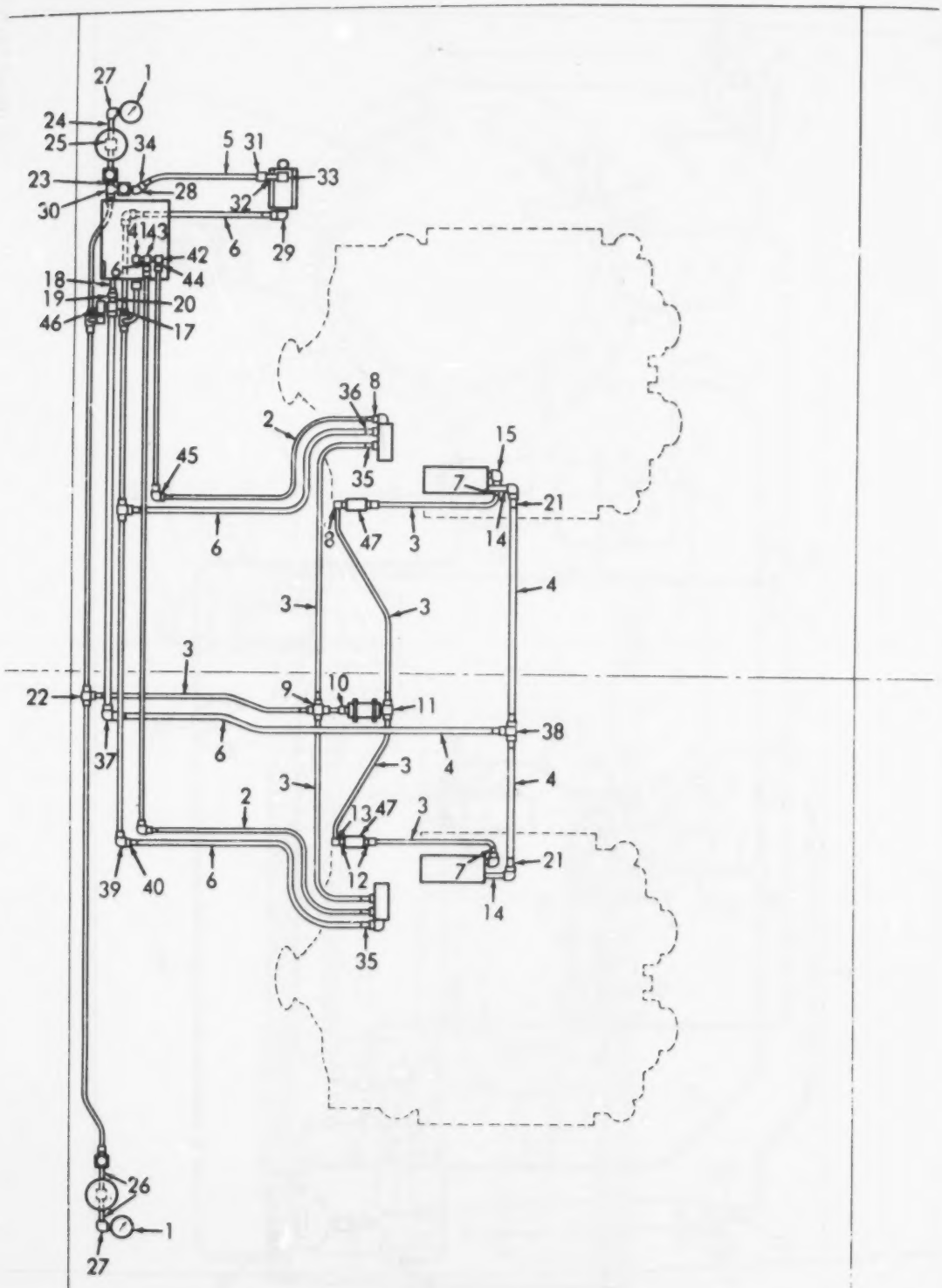

Figure 50. Hydraulic Starting Piping System

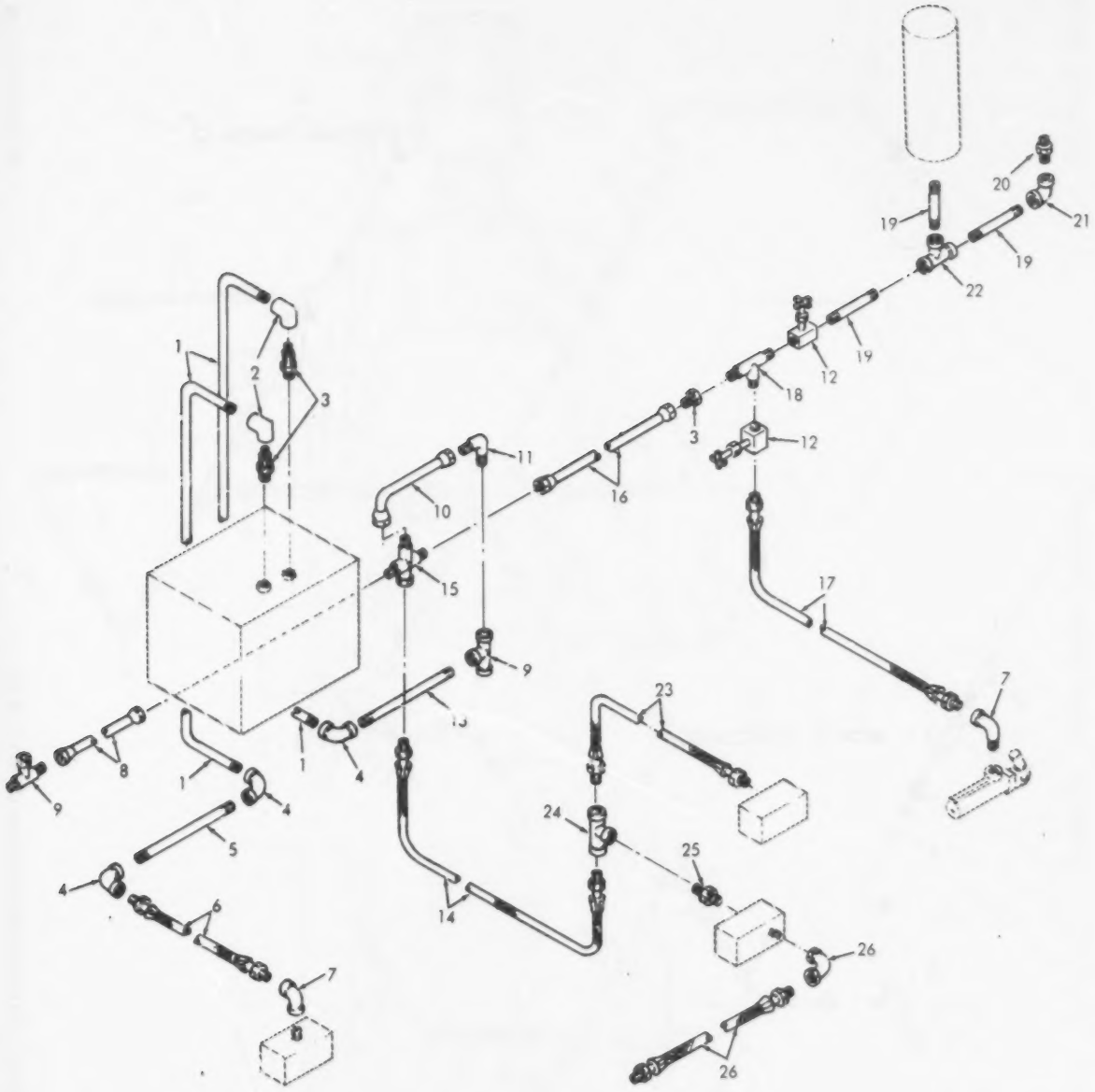

Figure 51. Hydraulic Starting Piping System (Sheet 1 of 2)

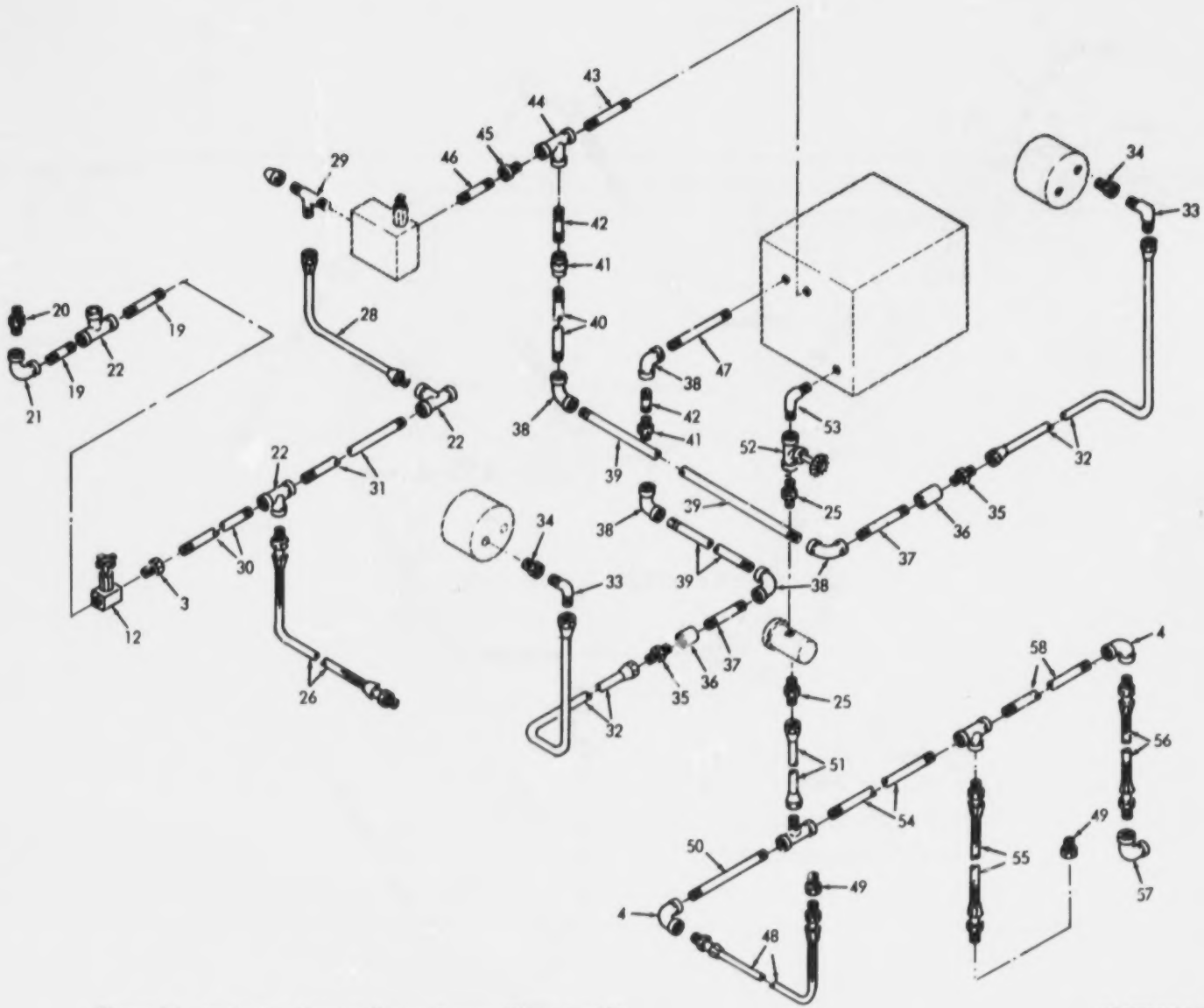

Figure 51. Hydraulic Starting Piping System (Sheet 2 of 2)

ME 1905-217-34P/31 ②

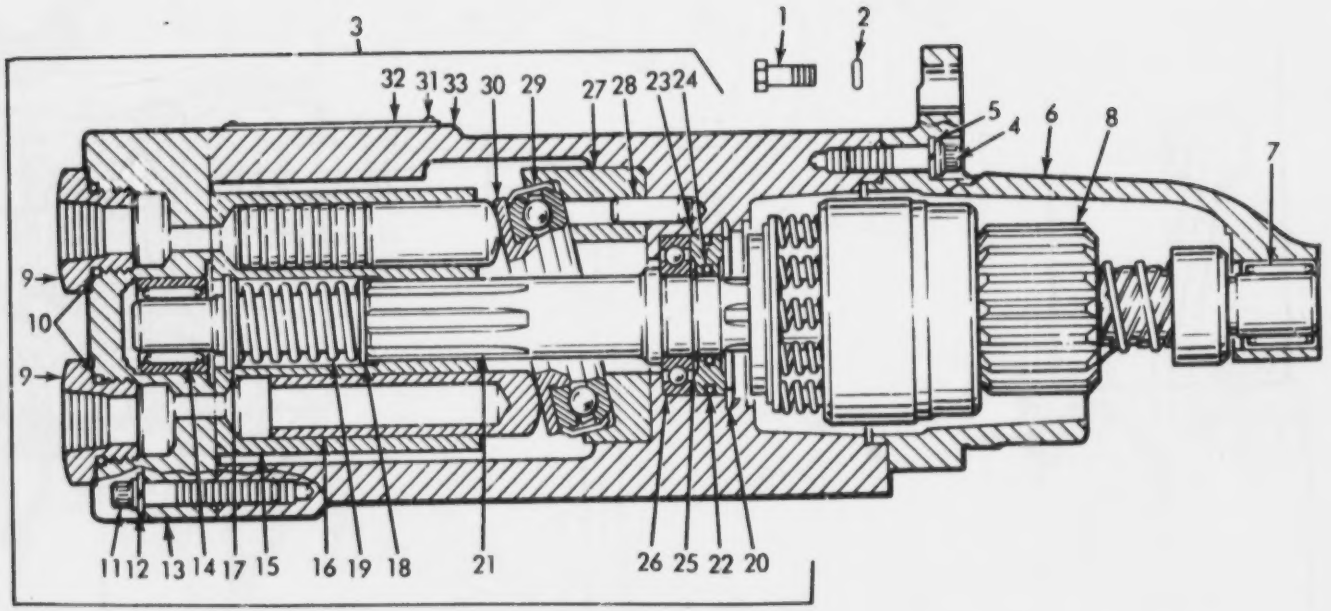

Figure 52. Starting Engine, Hydraulic

ME 1905-217-34P/52

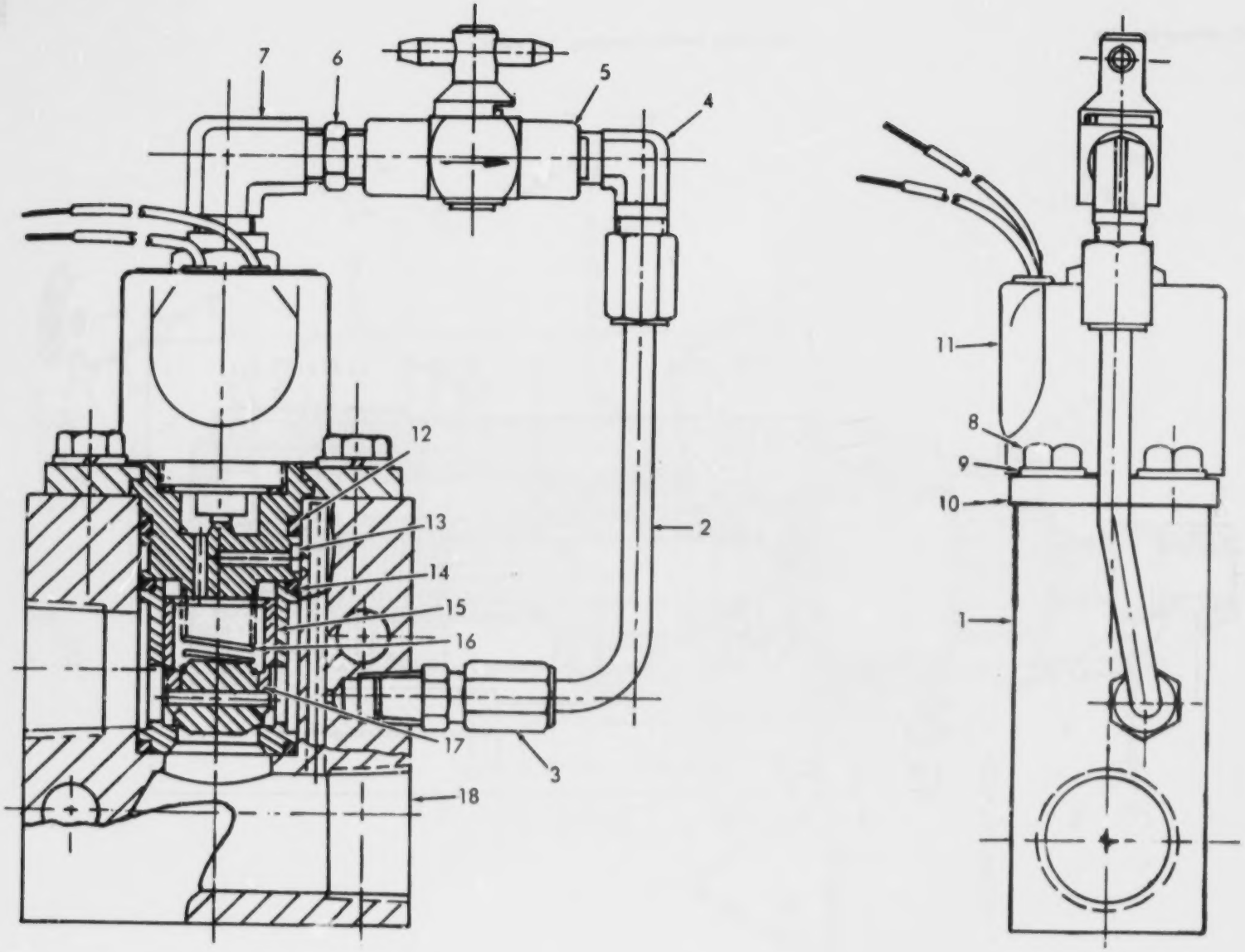

Figure 54. Solenoid Valve, Starting Motor

ME 1905-217-34P/54

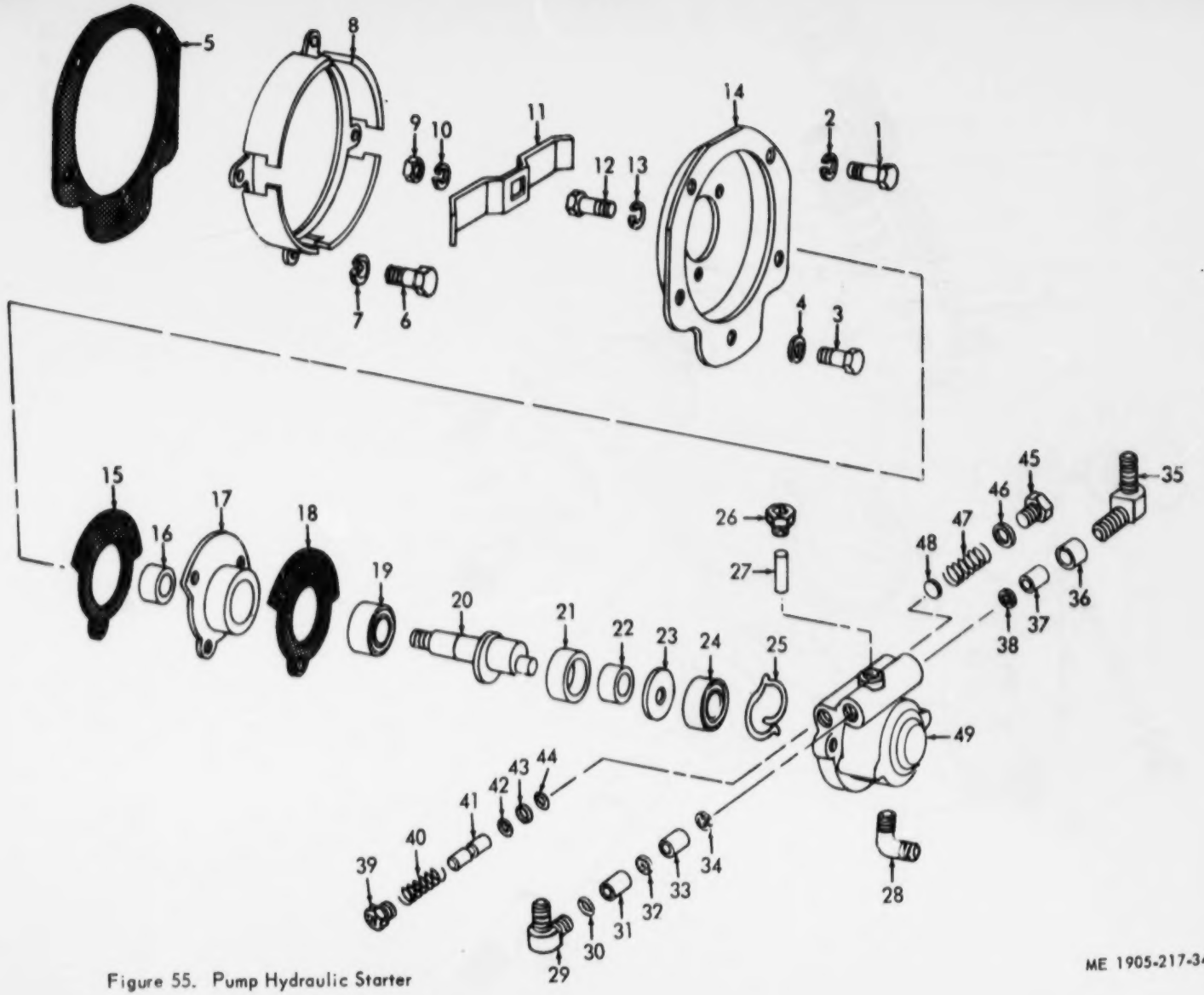

Figure 55. Pump Hydraulic Starter

ME 1905-217-34P/55

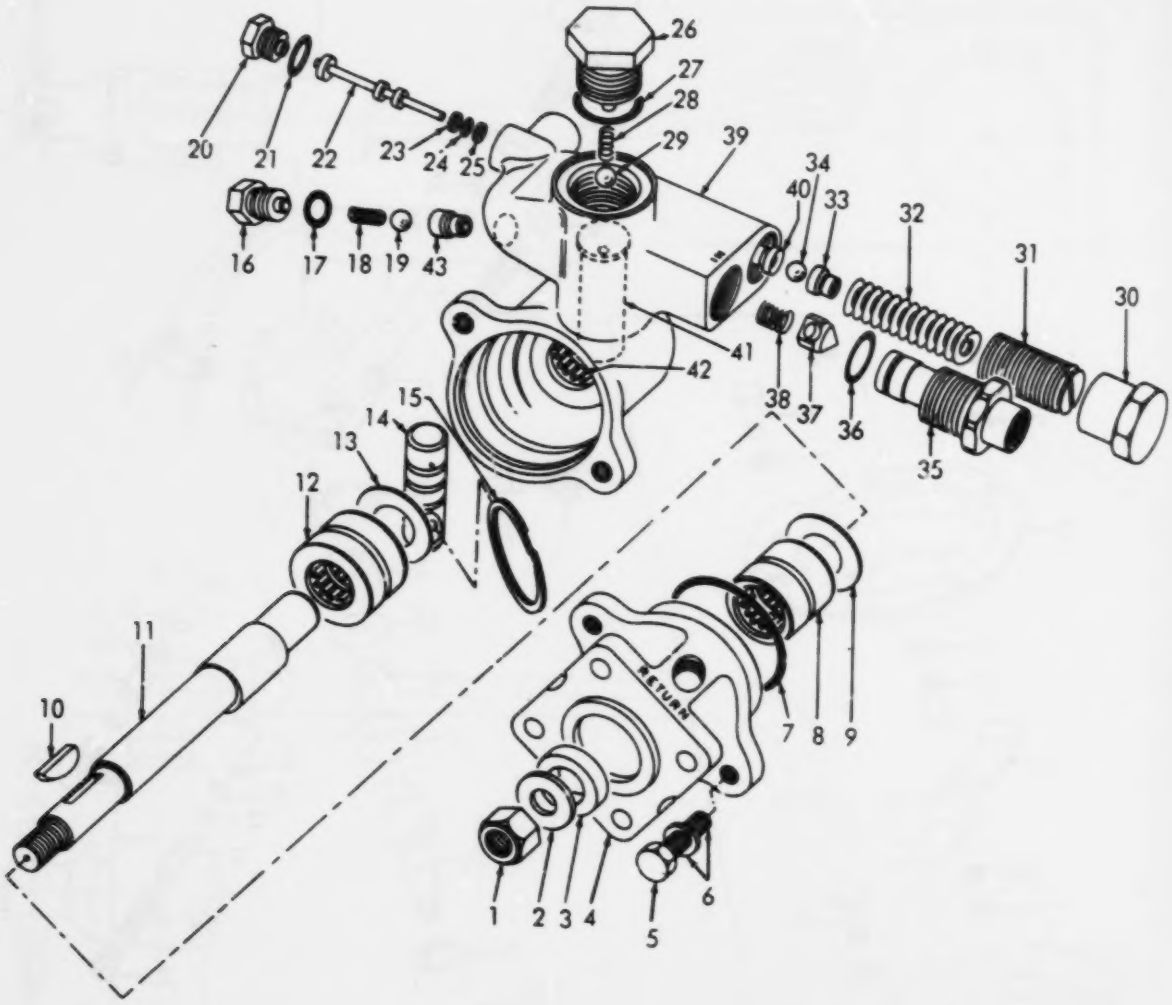

ME 1905-217-34P/56 ①

Figure 56. Pump Hydraulic Starter (Sheet 1 of 2)

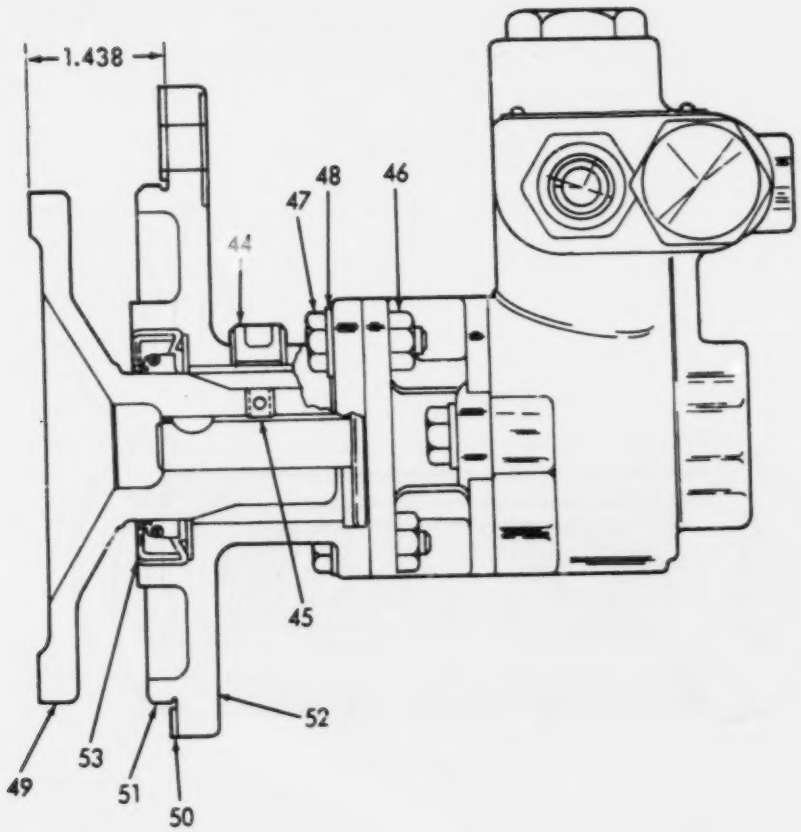

ME 1905-217-34P/56 ②

Figure 56. Pump Hydraulic Starter (Sheet 2 of 2)

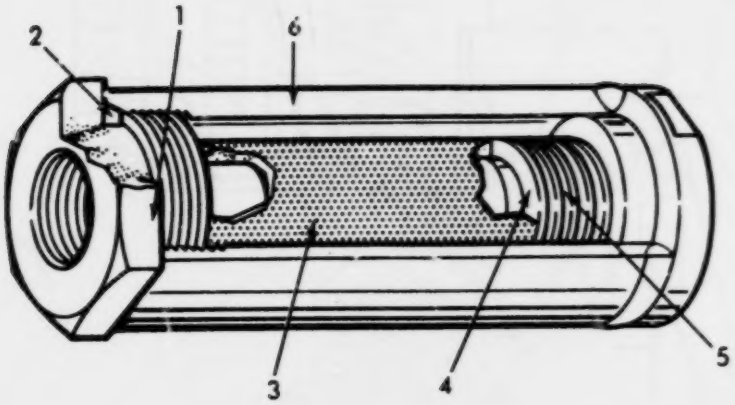

Figure 59. Filter, Oil, Hydraulic Starting

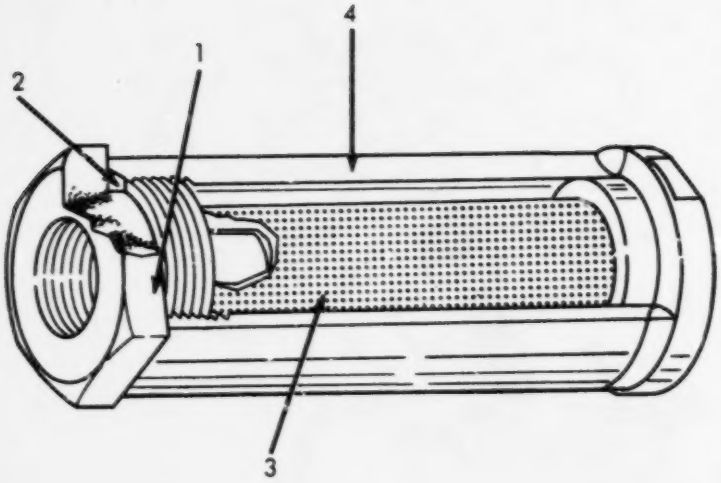

Figure 60. Filter, Oil, Hydraulic Starting

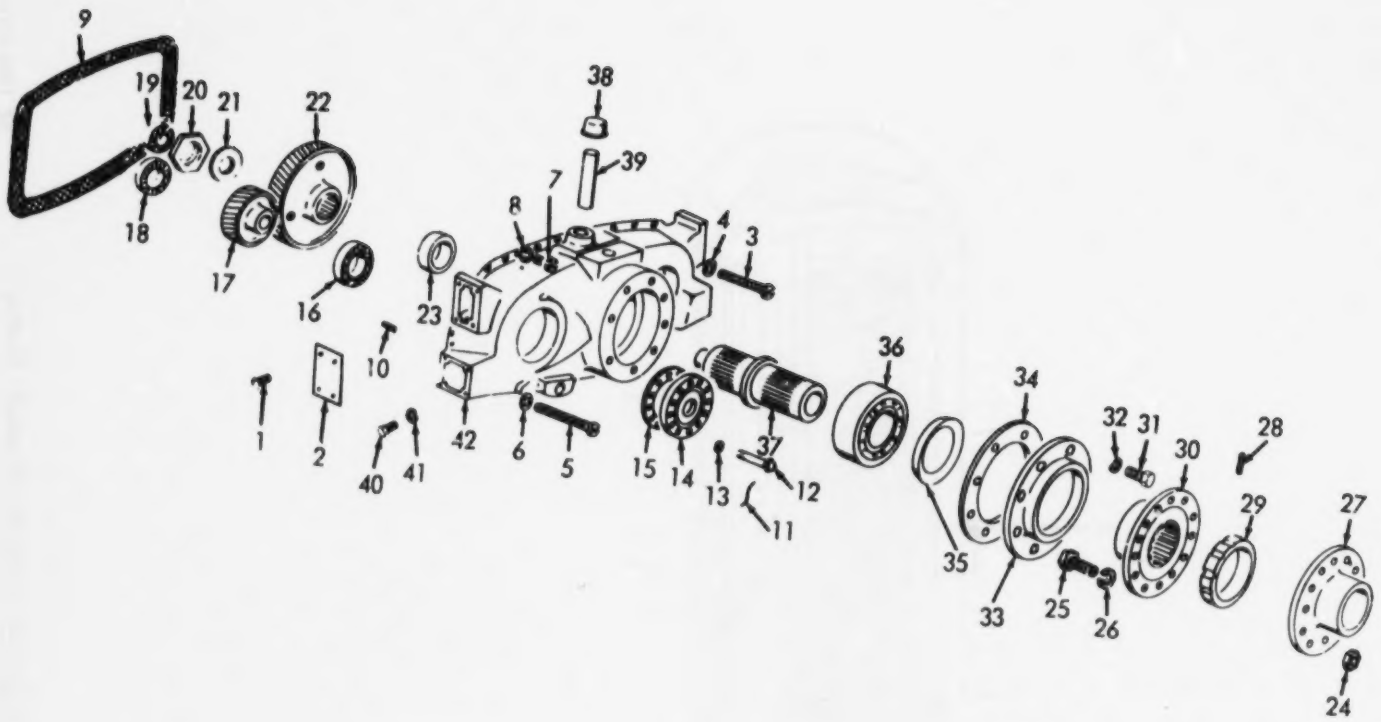

ME 1905-217-34P/61

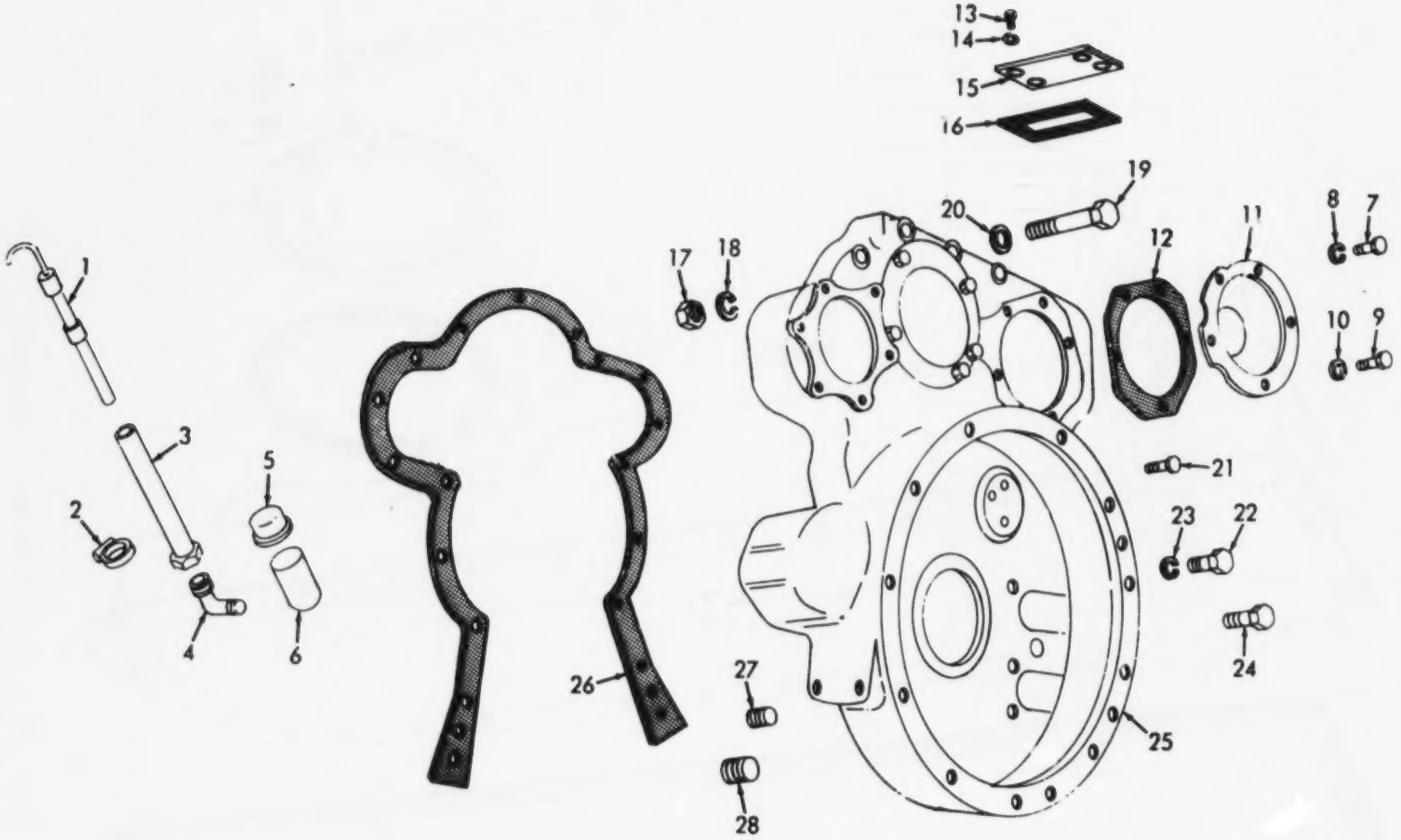

Figure 63. Flywheel Housing

ME 1905-217-34P/63

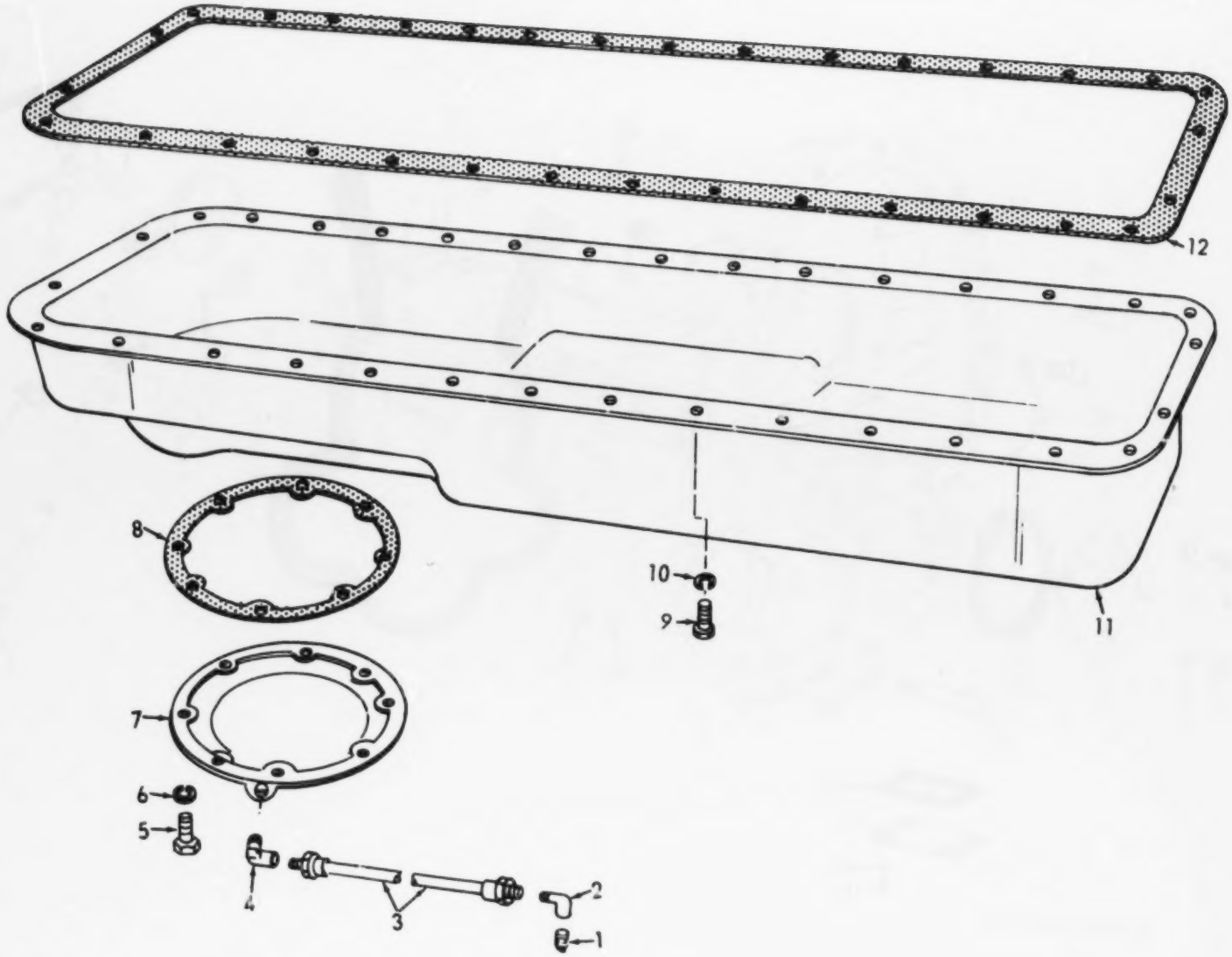

Figure 71. Oil Pan

ME 1905-217-34P/71

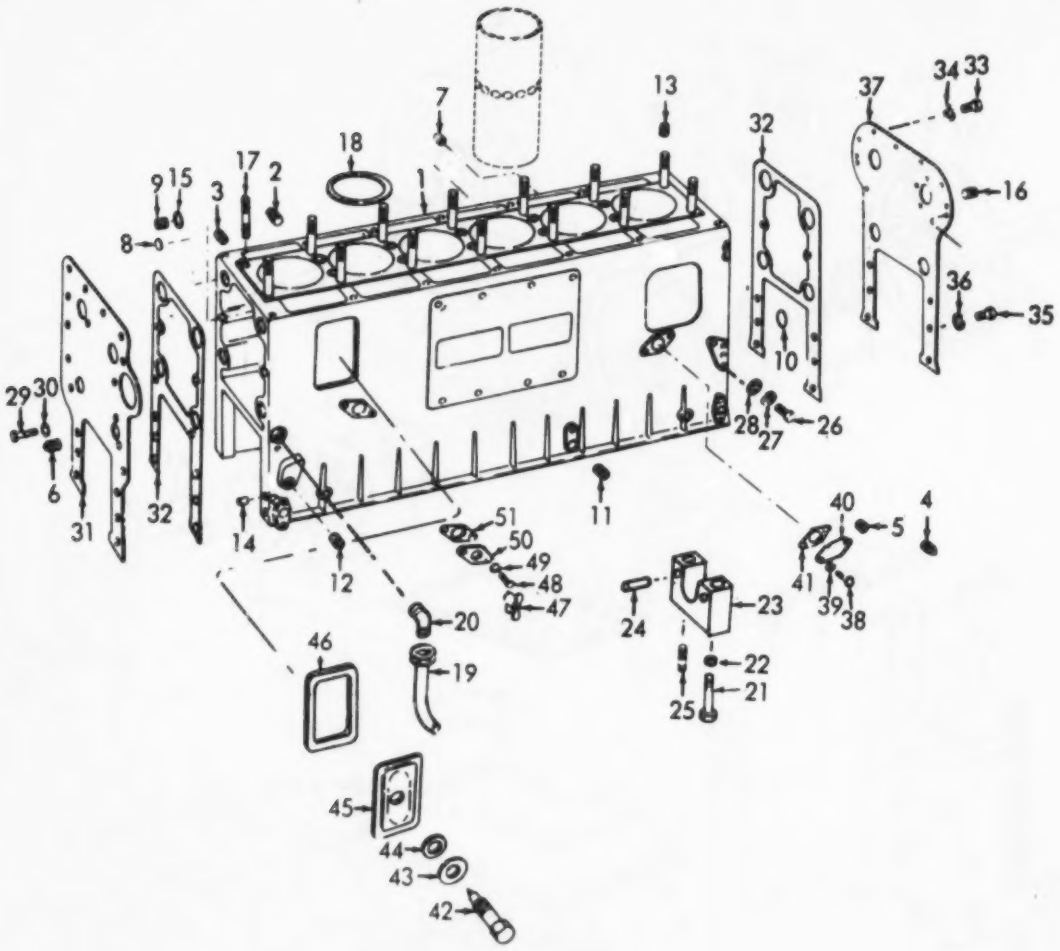

Figure 75. Cylinder Block

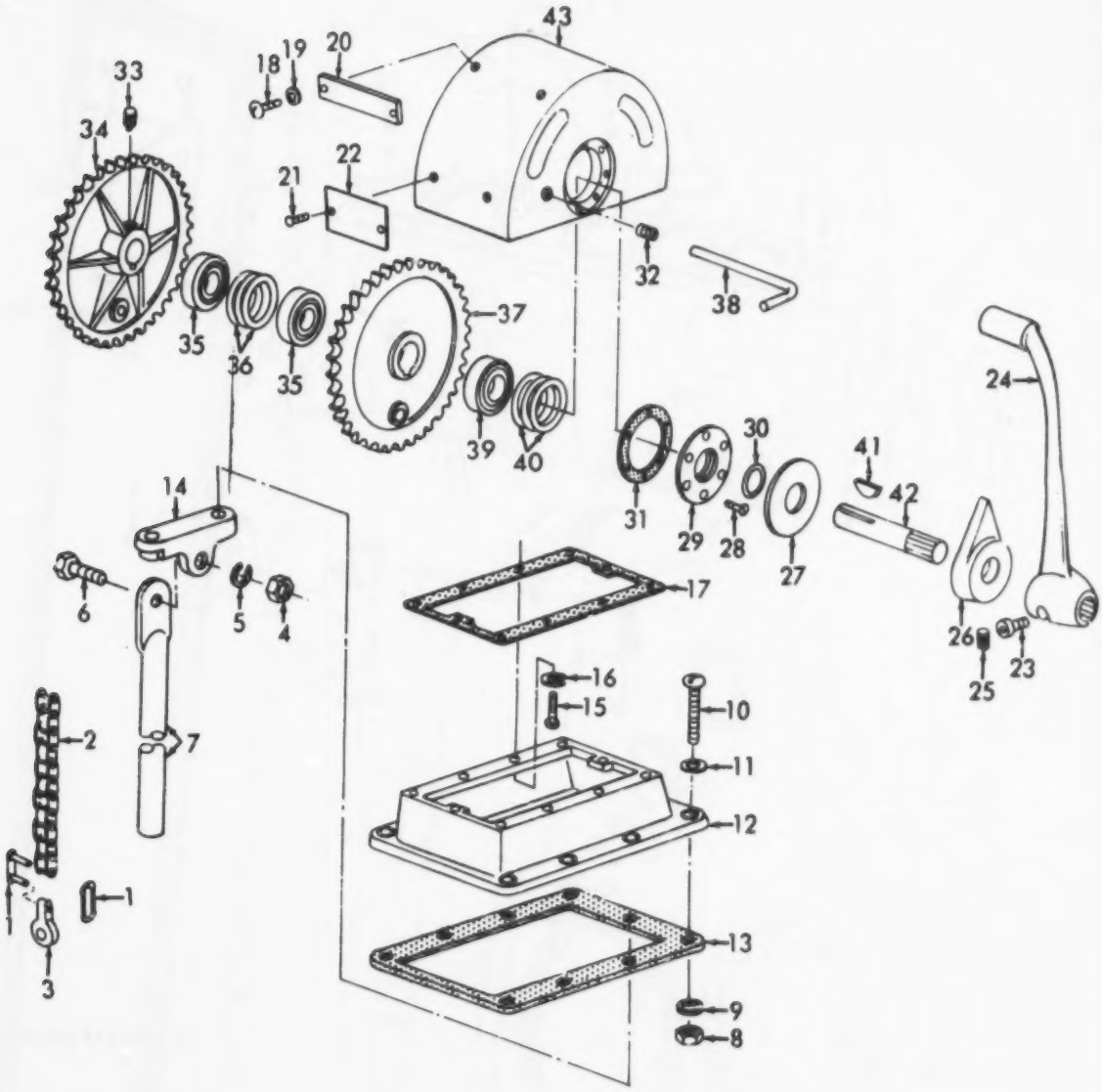

Figure 76. Pilot House Levers, Sprockets and Chain

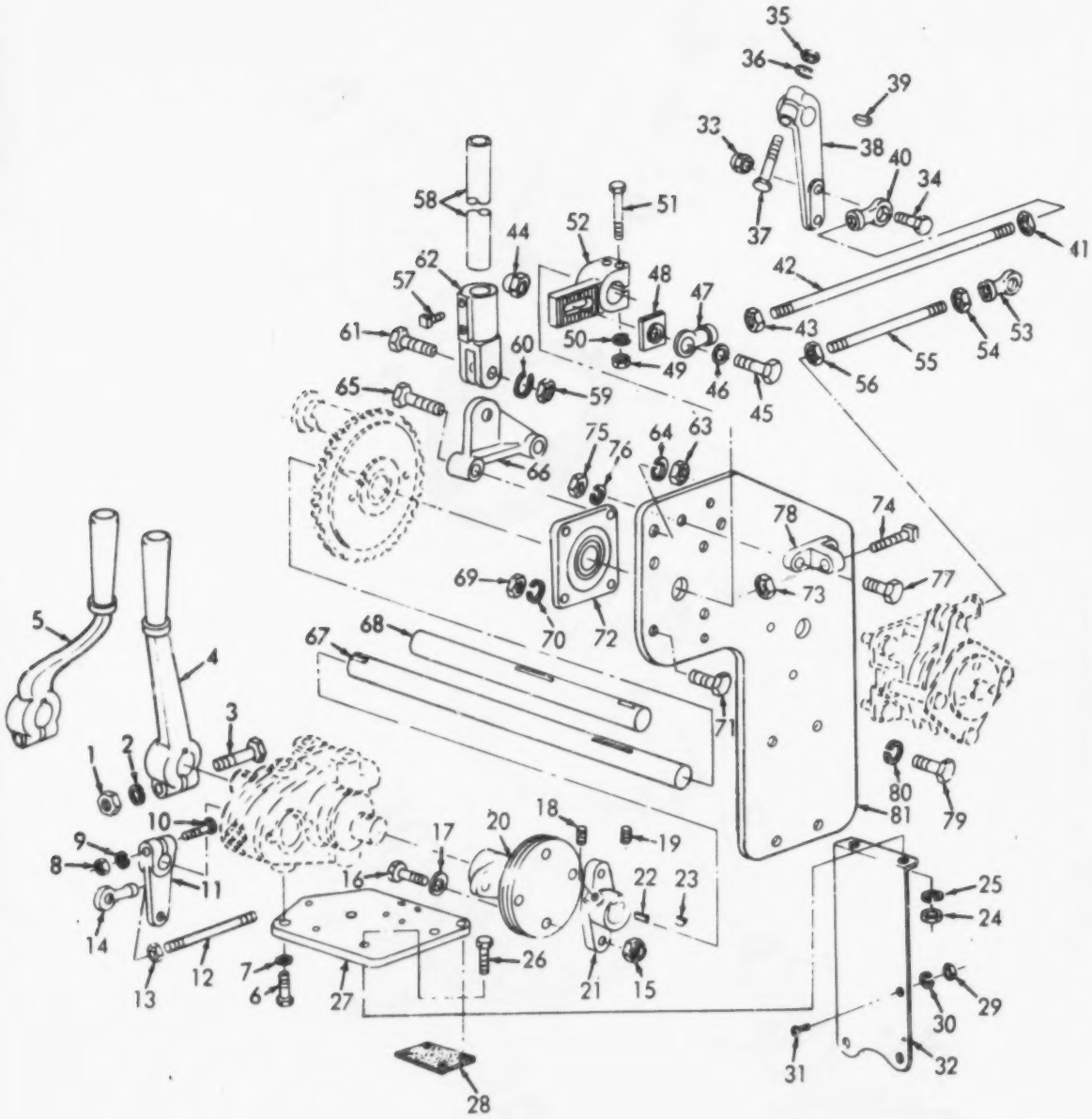

Figure 78. Engine Control Levers and Brackets

ME 1905-217-34P/78

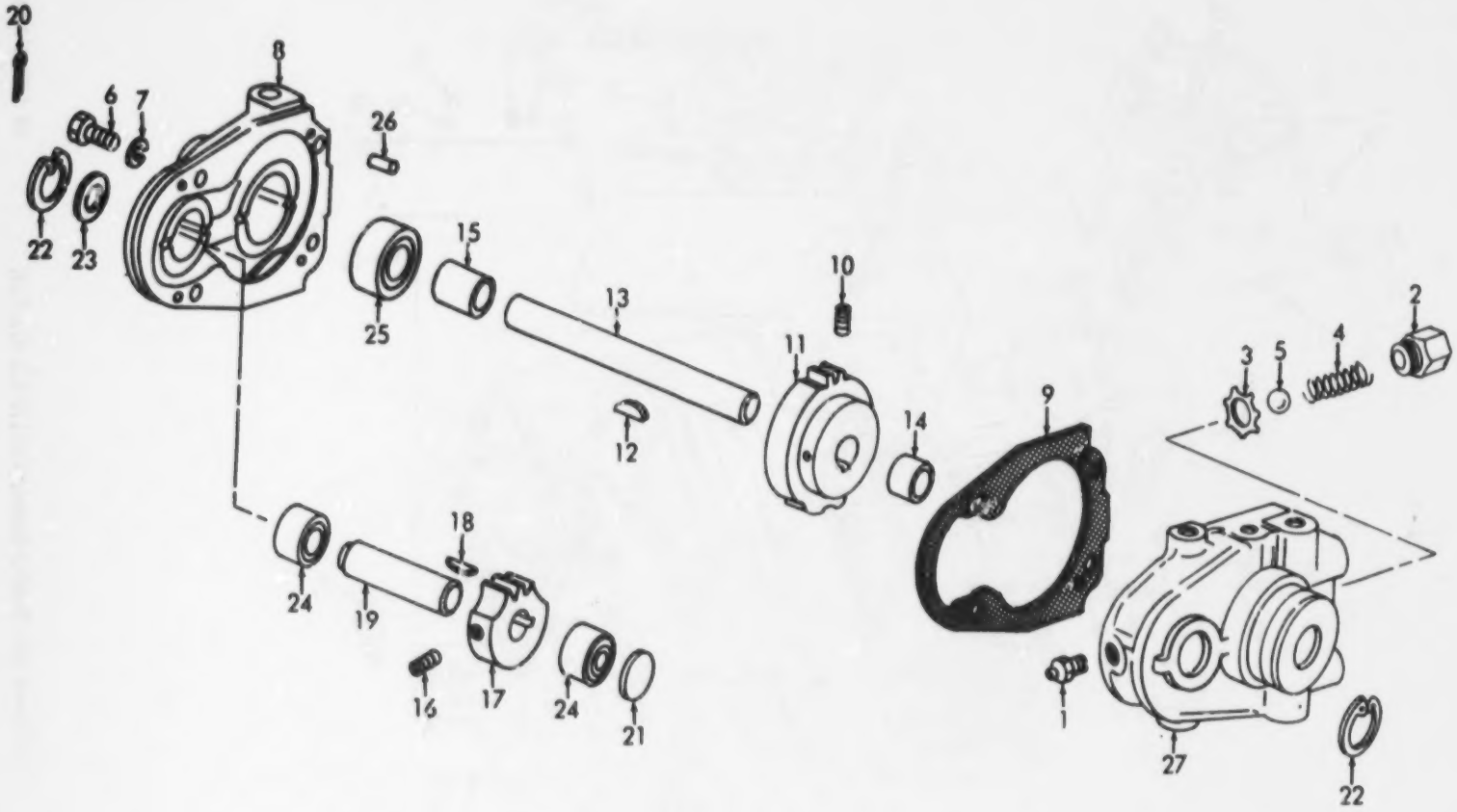

Figure 79. Engine Control Unit

ME 1905-217-34P/79

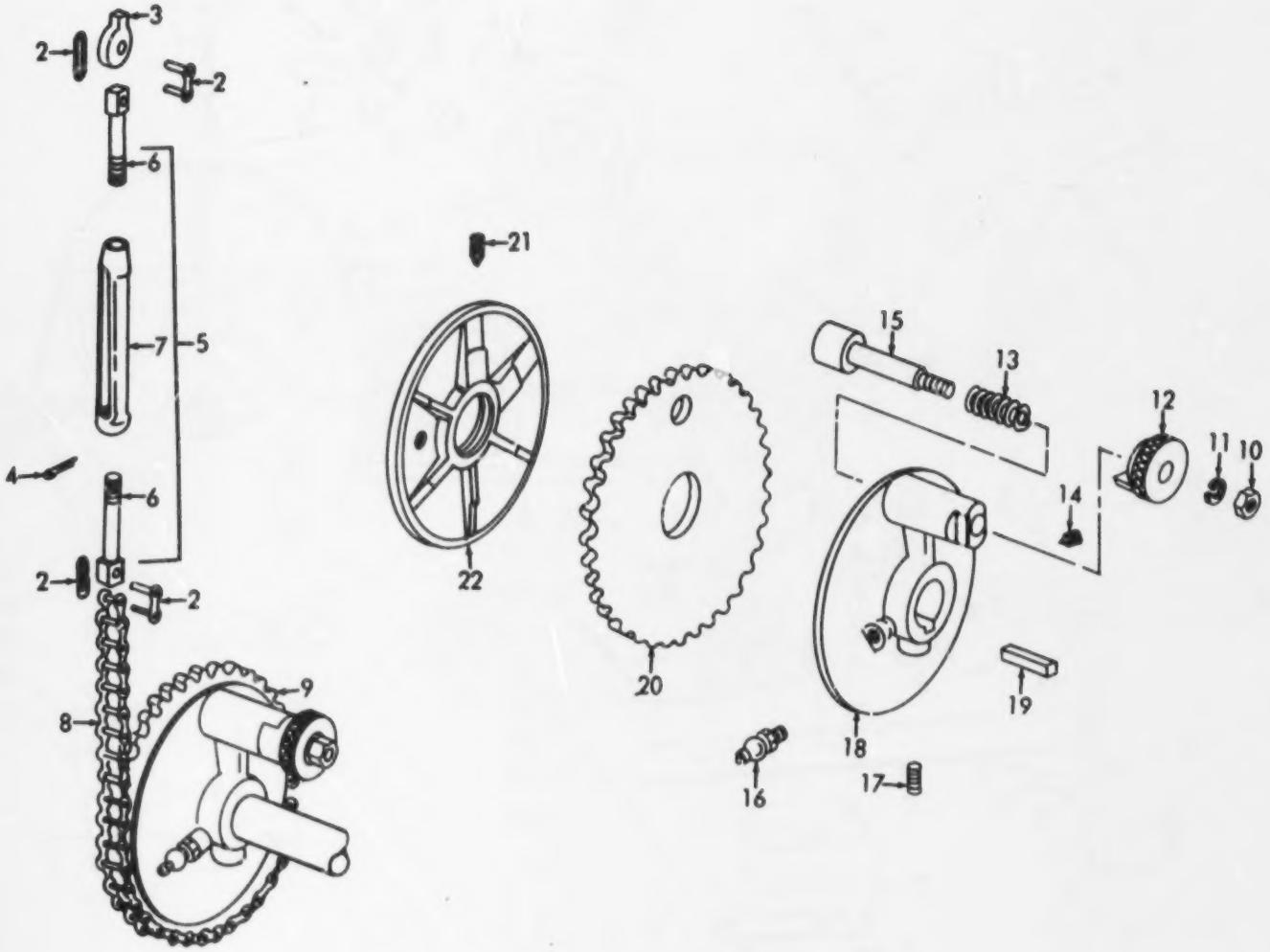

Figure 80. Pilot House Engine Controls

ME 1905-217-34P/80

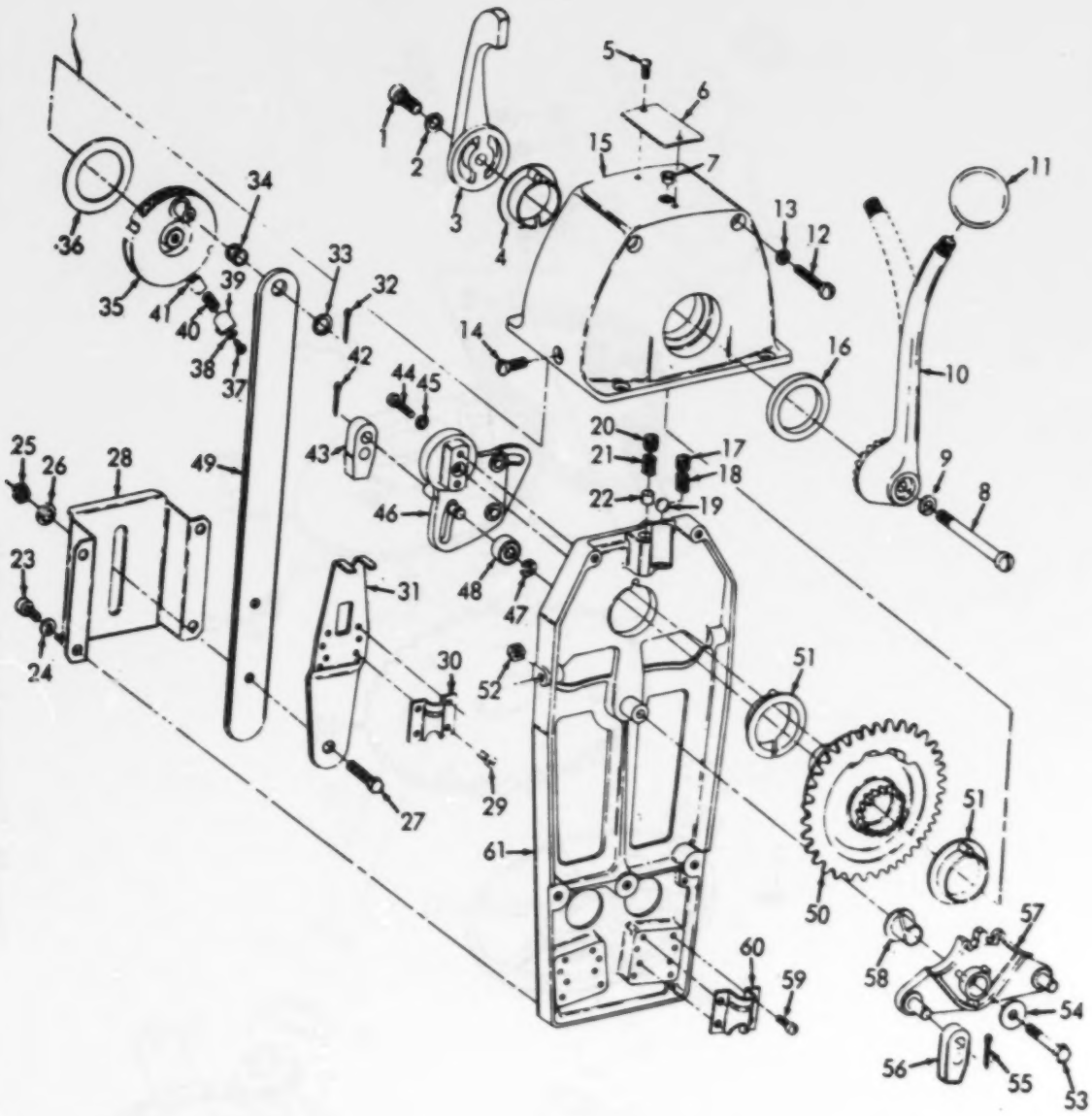

ME 1905-217-34P/83

Figure 83. Pilot House Controls

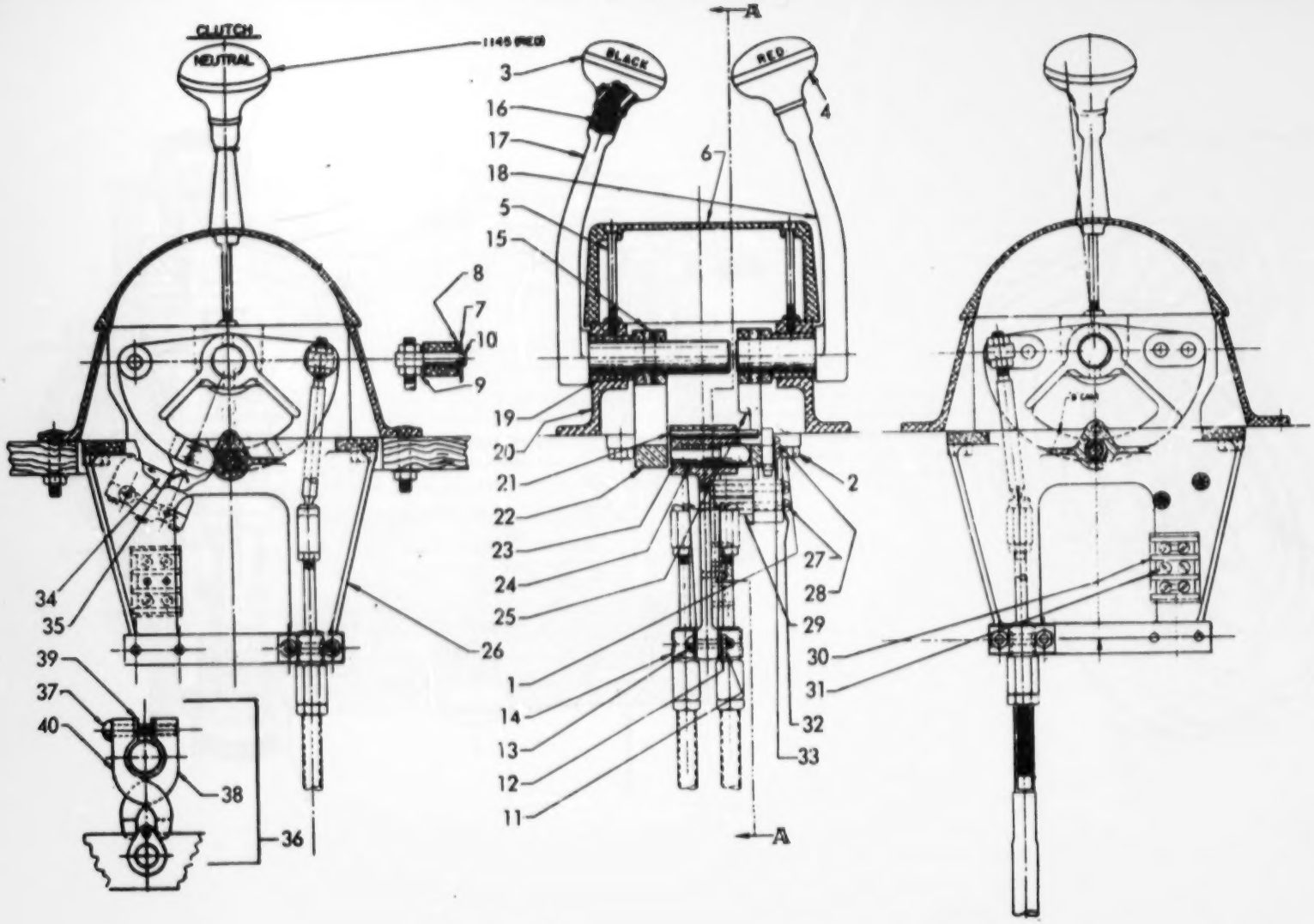

Figure 84. Pilot House Engine Controls

ME 1905-217-34P/84

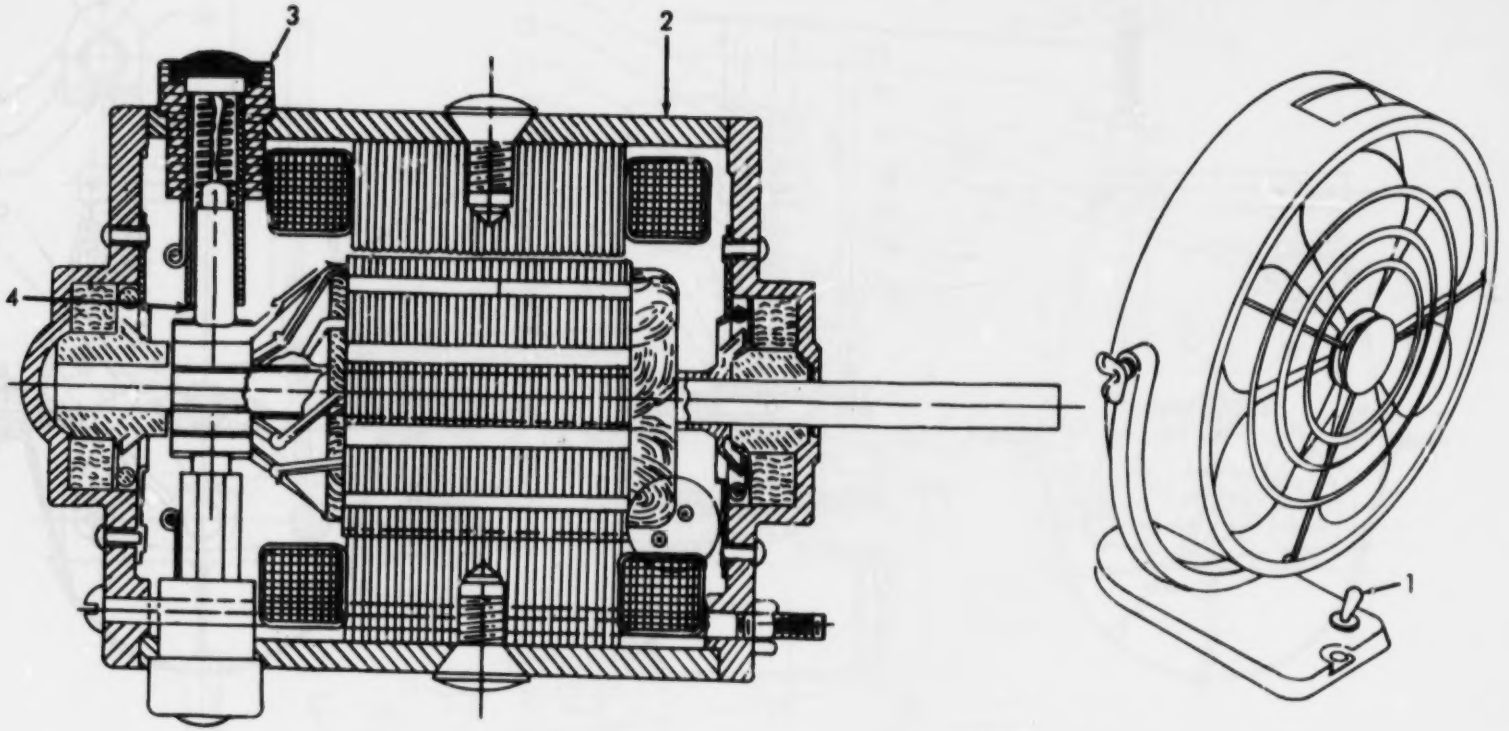

ME 1905-217-34P/88

Figure 88. Fan Engine Boom

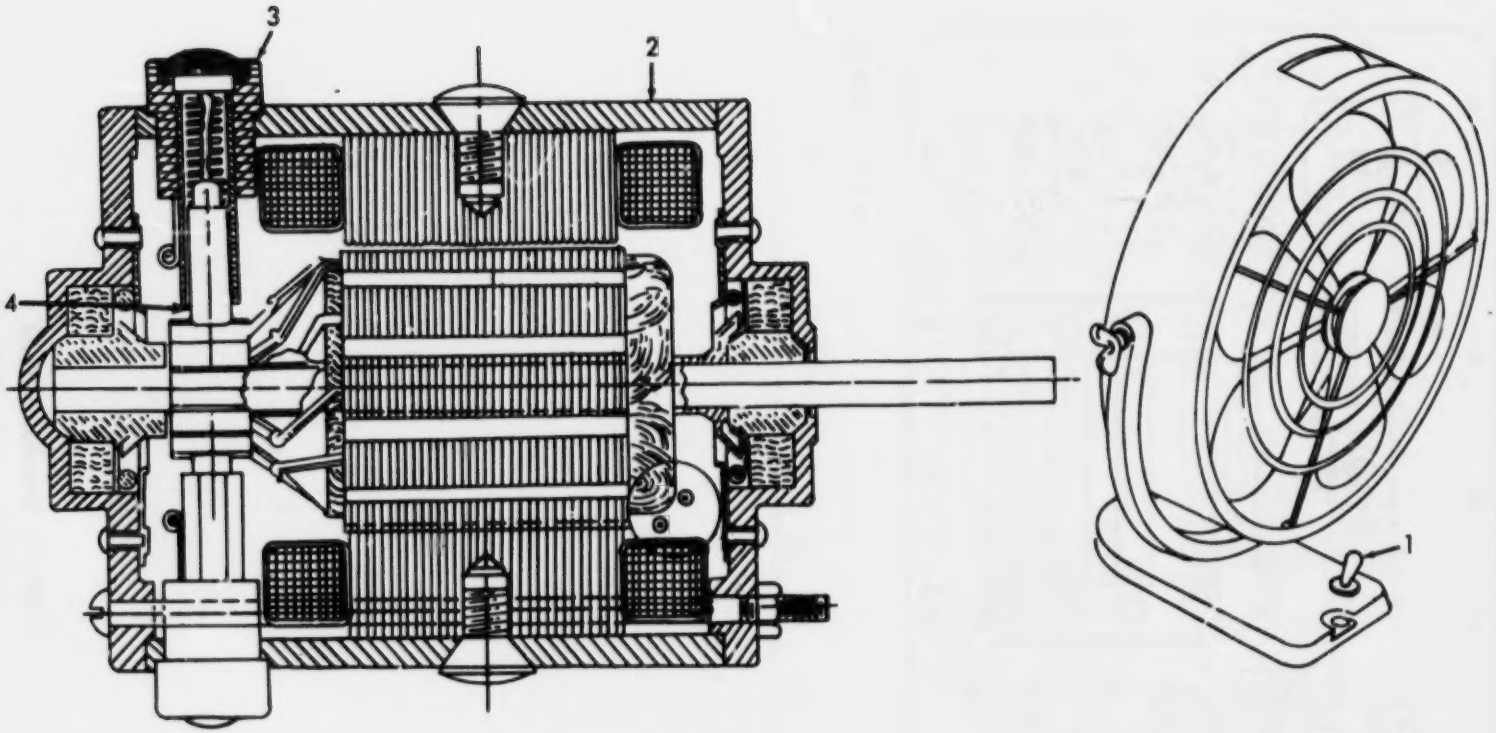

ME 1905-217-34P/89

Figure 89. Fan Engine Boom

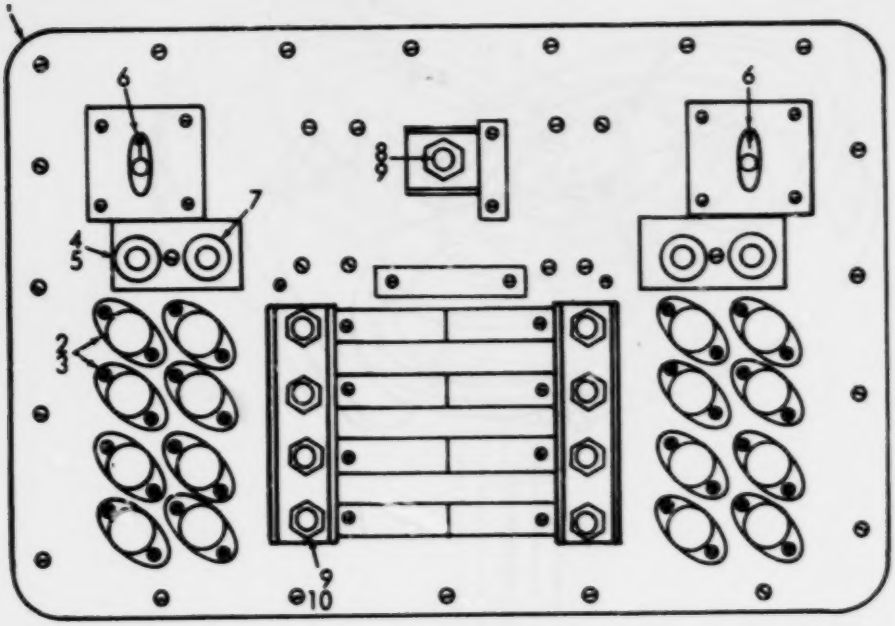

ME 1905-217-34P/90

Figure 90. Distribution Panel

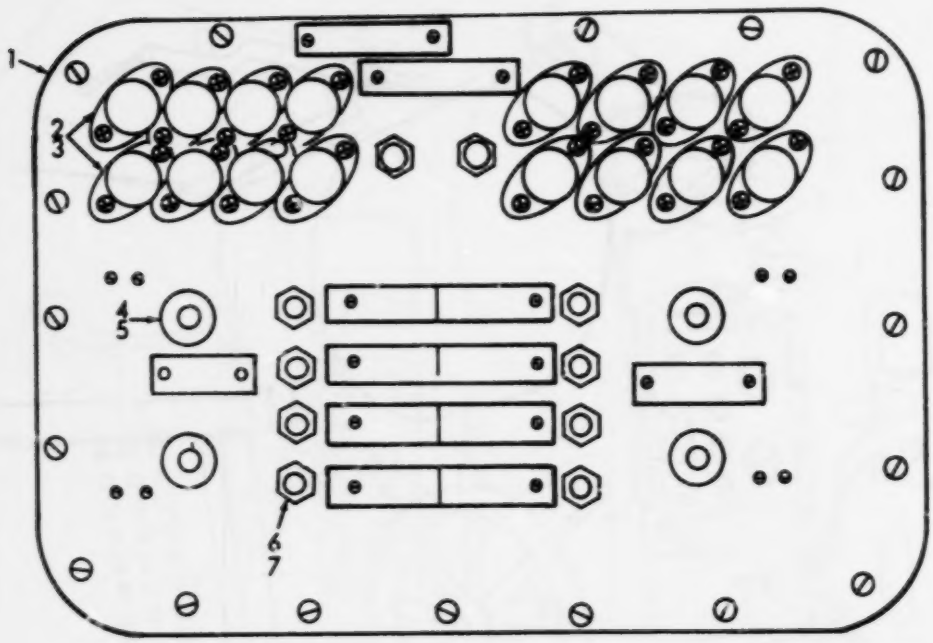

ME 1905-217-34P/91

Figure 91. Distribution Panel

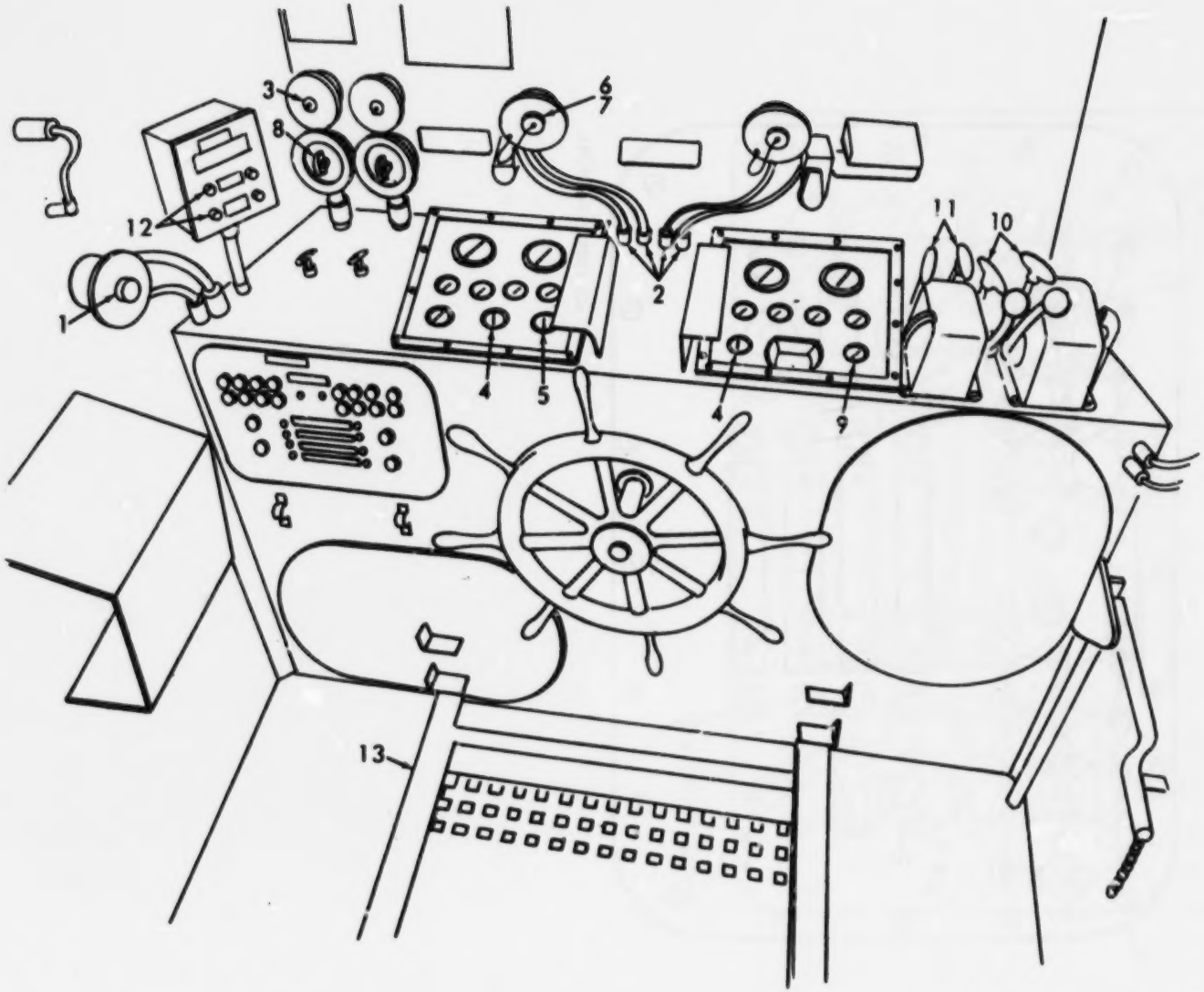

ME 1905-217-34P/92

Figure 92. Cables, Gages and Lights

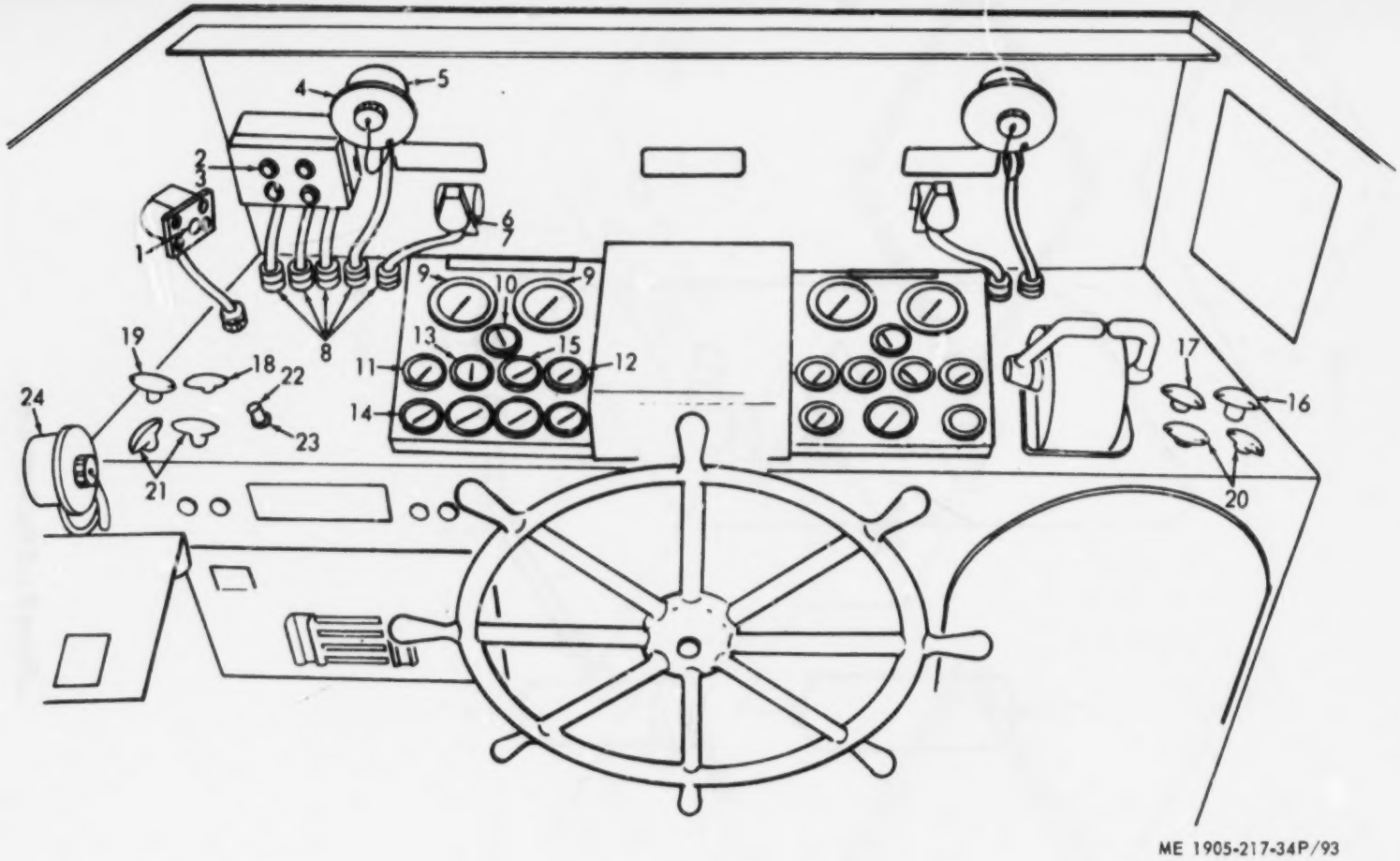

ME 1905-217-34P/93

Figure 93. Indicator and Lights

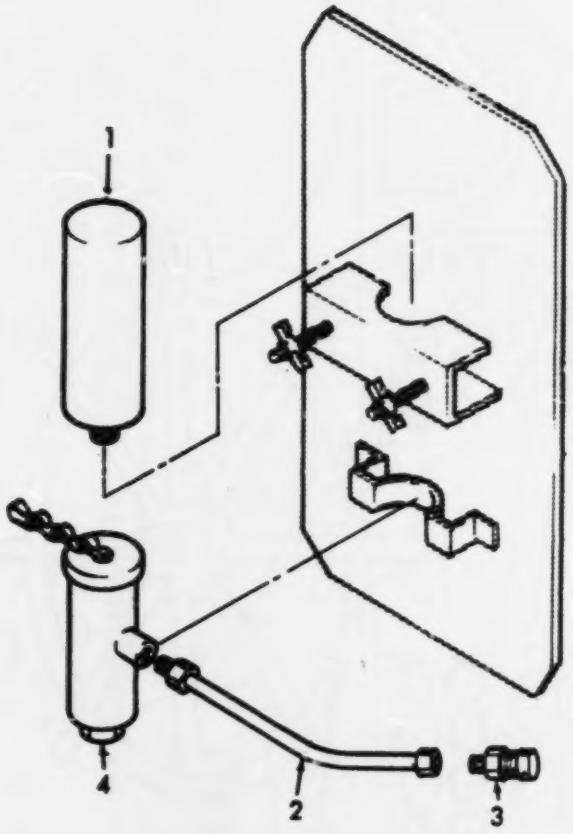

ME 1905-217-34P/94

Figure 94. Ether Starting Aid

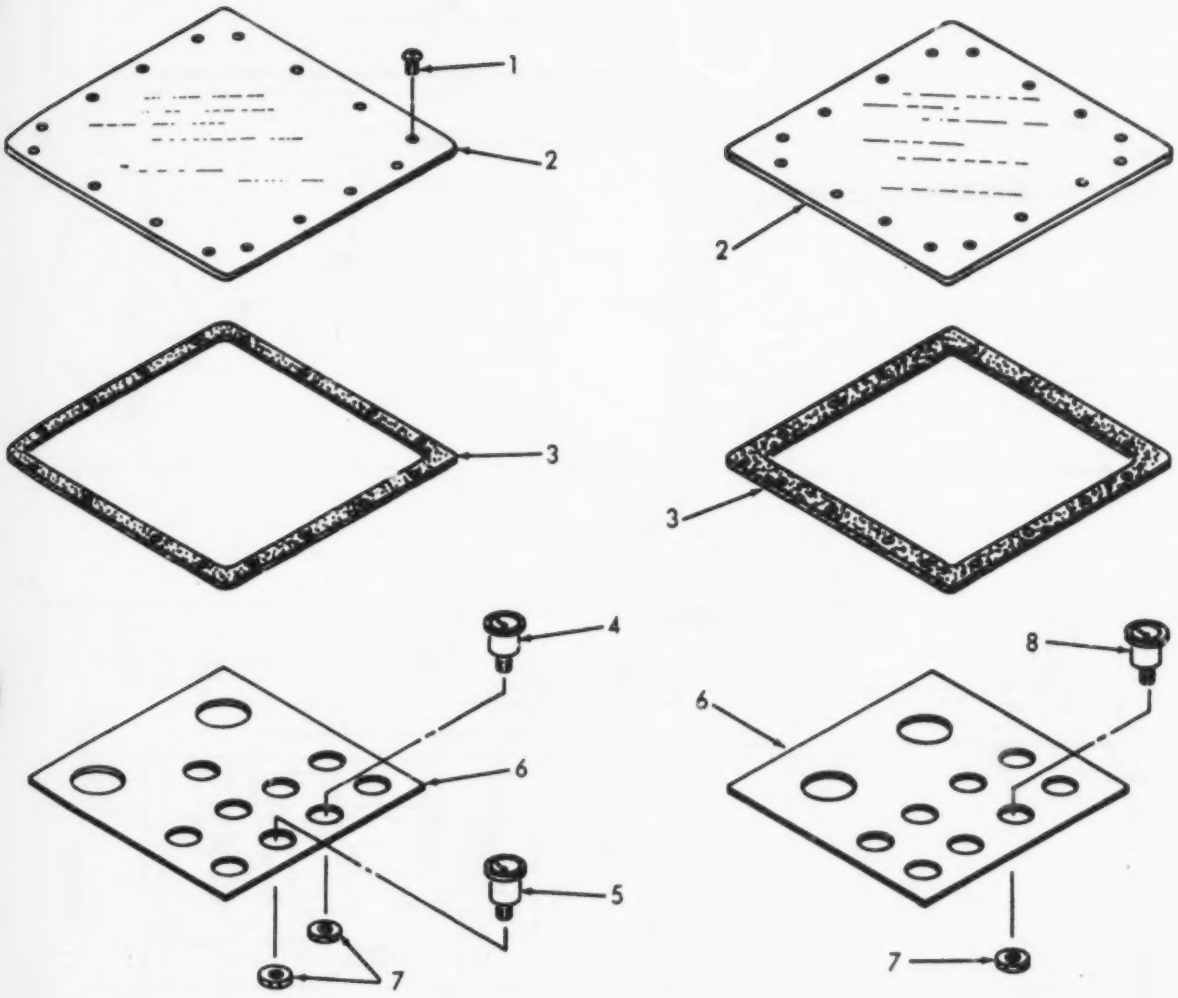

ME 1905-217-34P/95

Figure 95. instruments and Plate

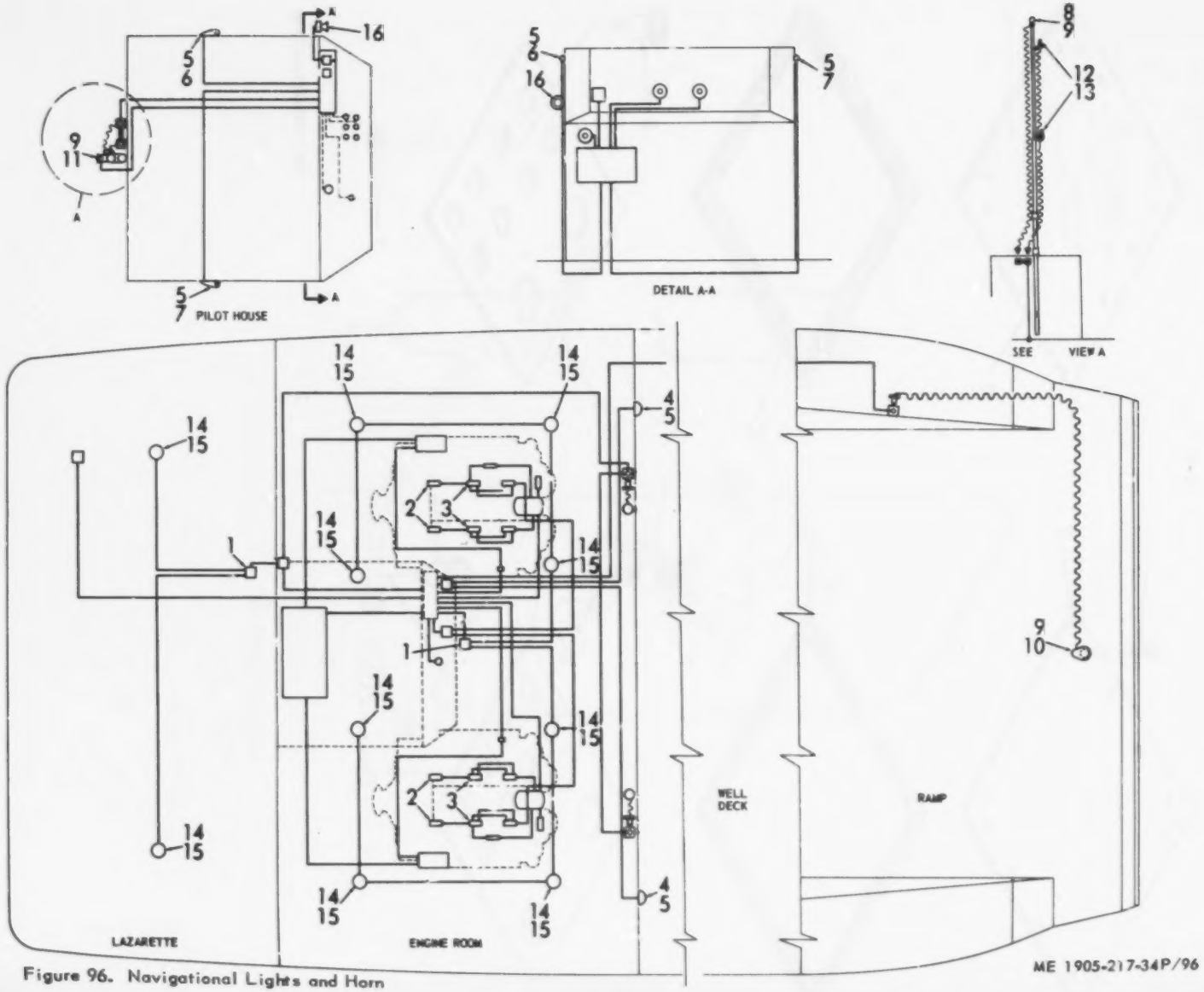

Figure 96. Navigational Lights and Horn

ME 1905-217-34P/96

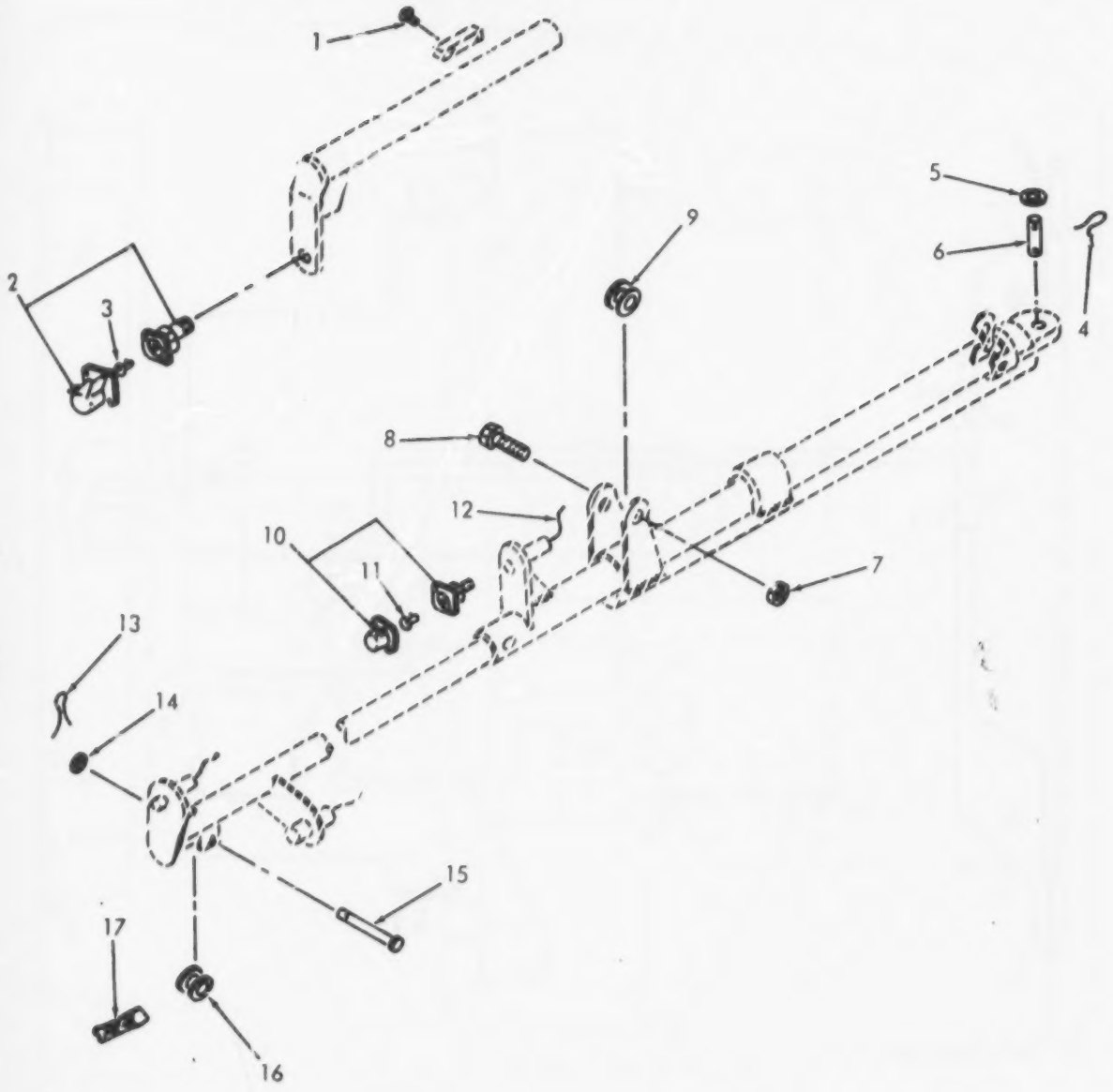

ME 1905-217-34P/97

Figure 97. Forward and Main Mast

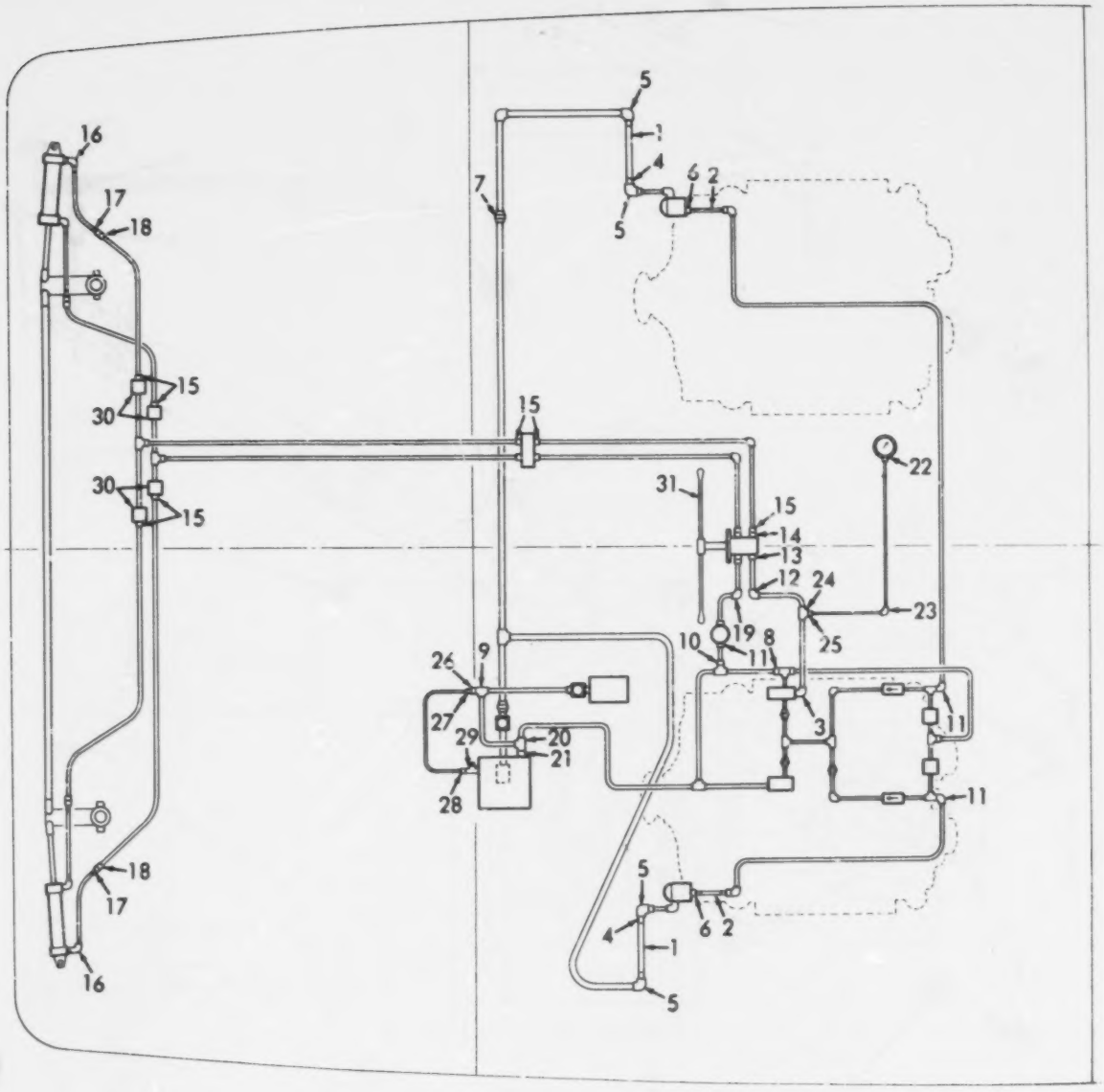

ME 1905-217-34P/100

Figure 100. Piping Steering

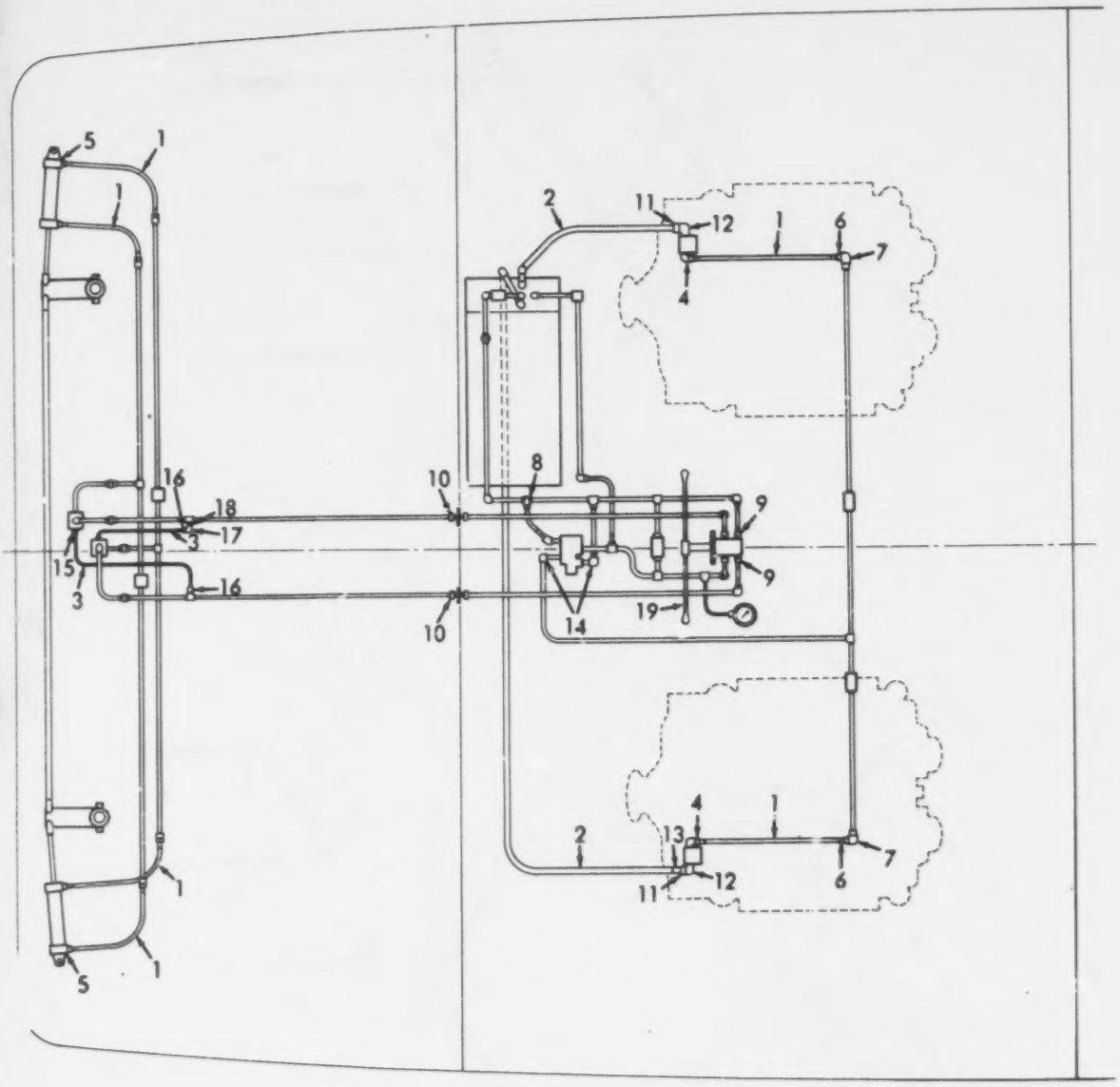

ME 1905-217-34P/101

Figure 101. Piping Steering

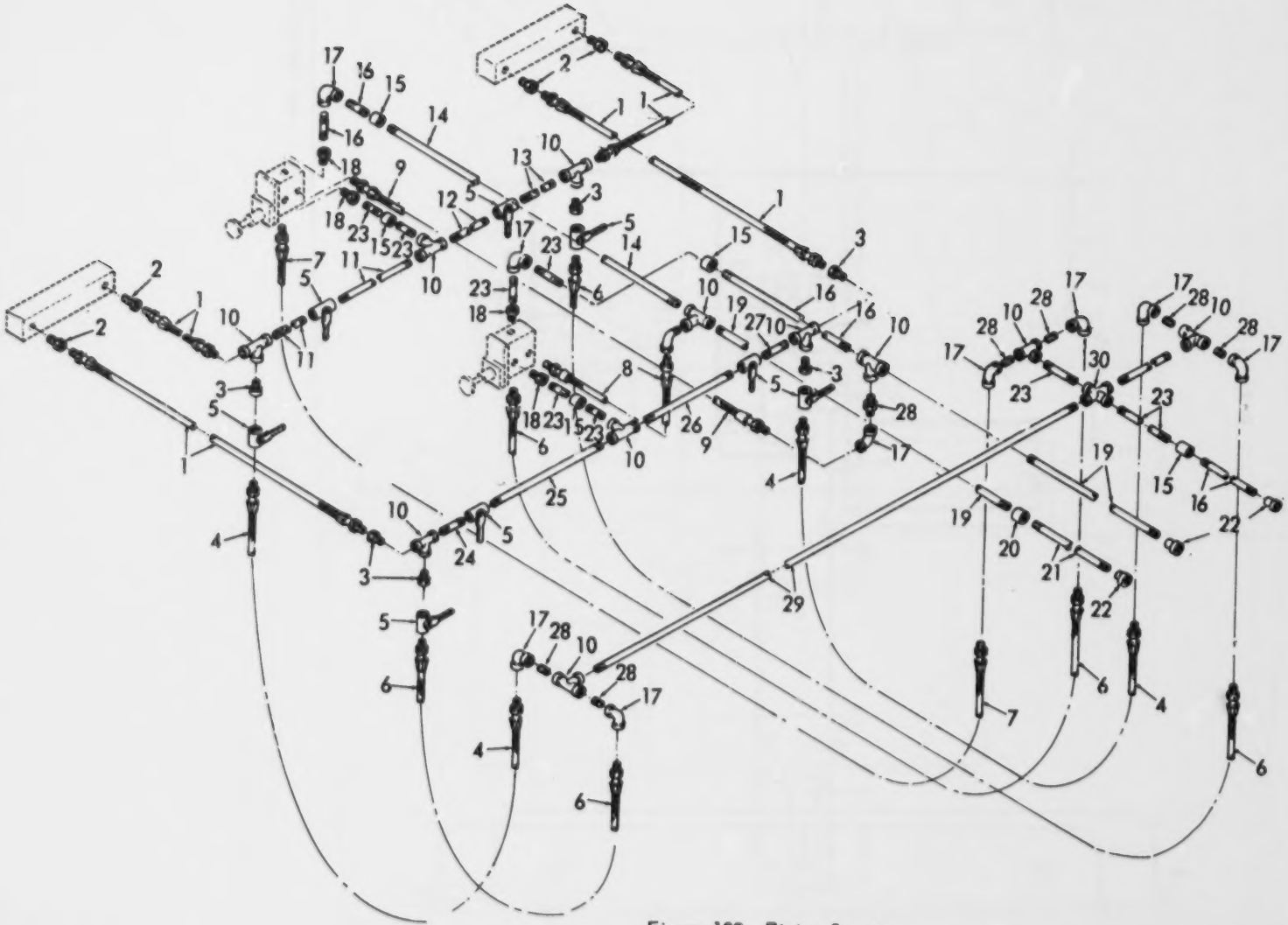

Figure 102. Piping Steering

ME 1905-217-34P/102

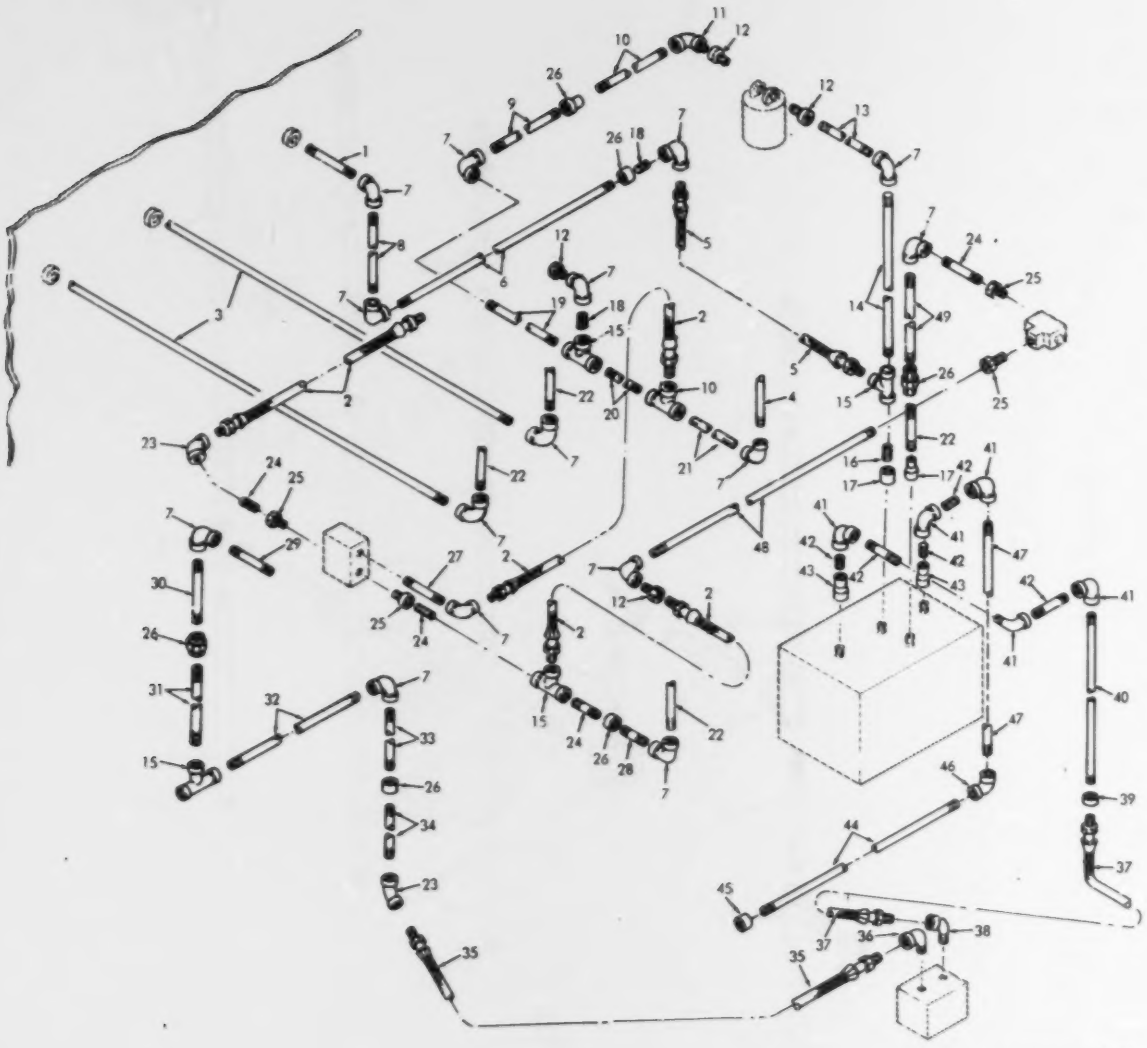

Figure 103. Piping Steering

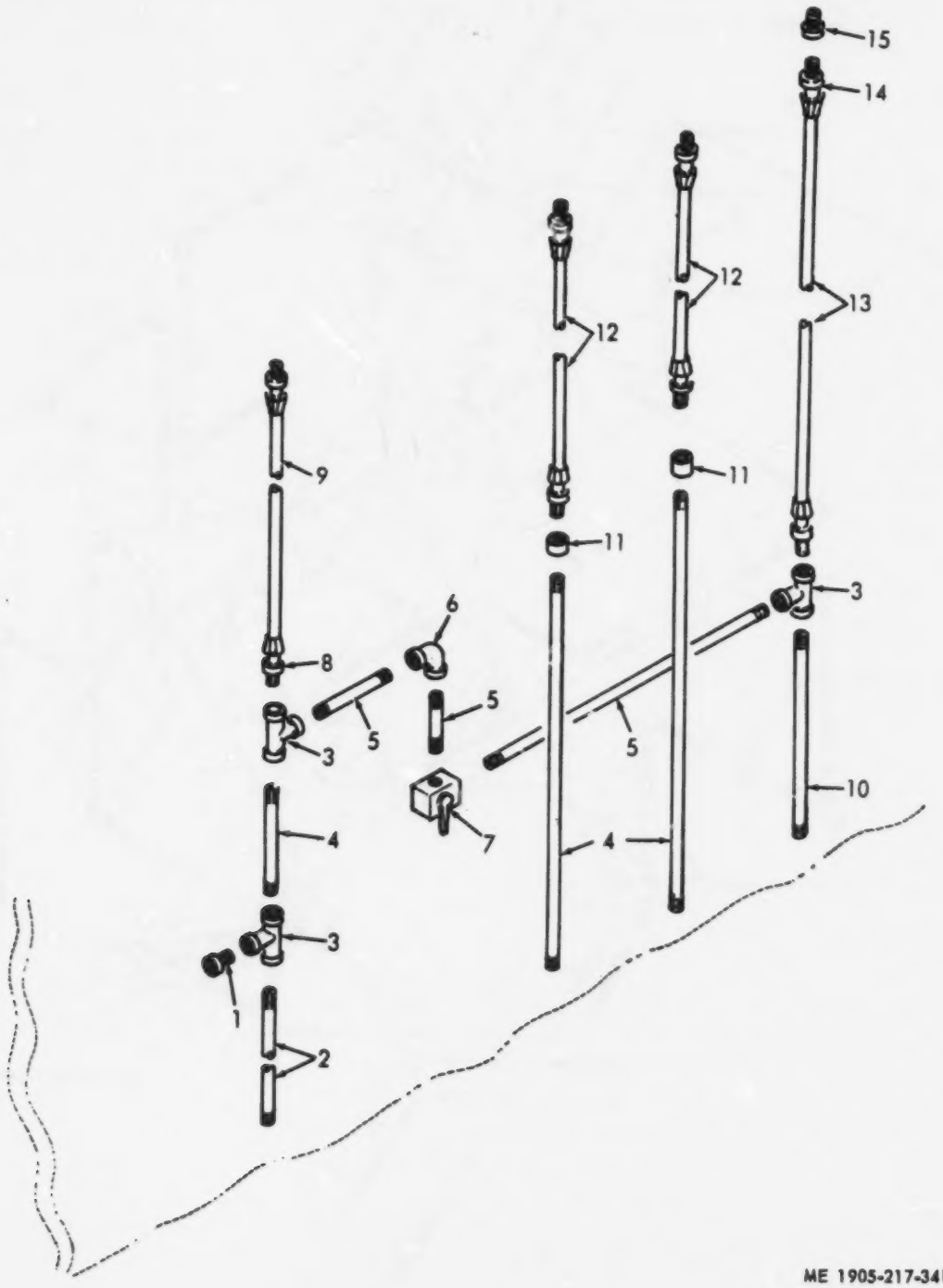

ME 1905-217-34P/104

Figure 104. Piping Steering

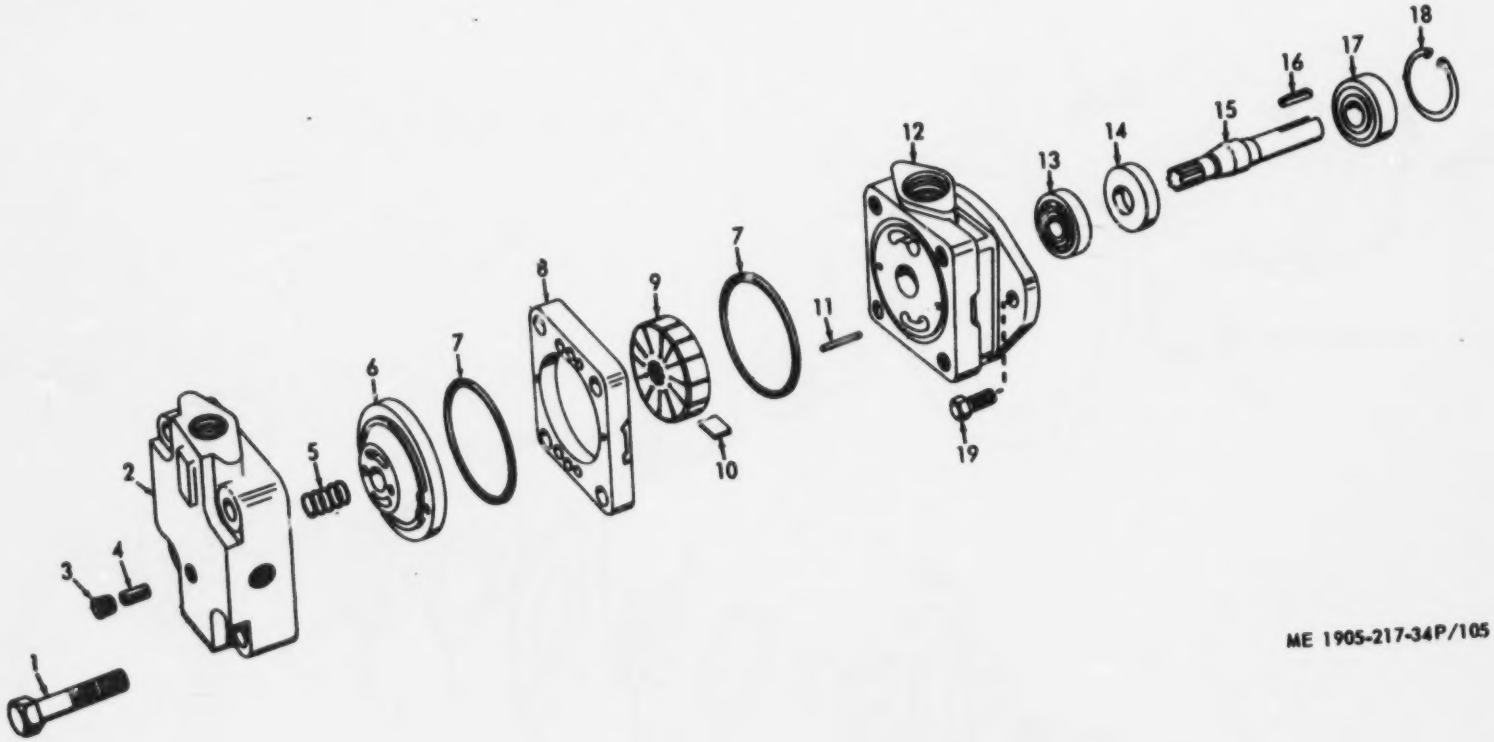

Figure 105. Pump, Steering

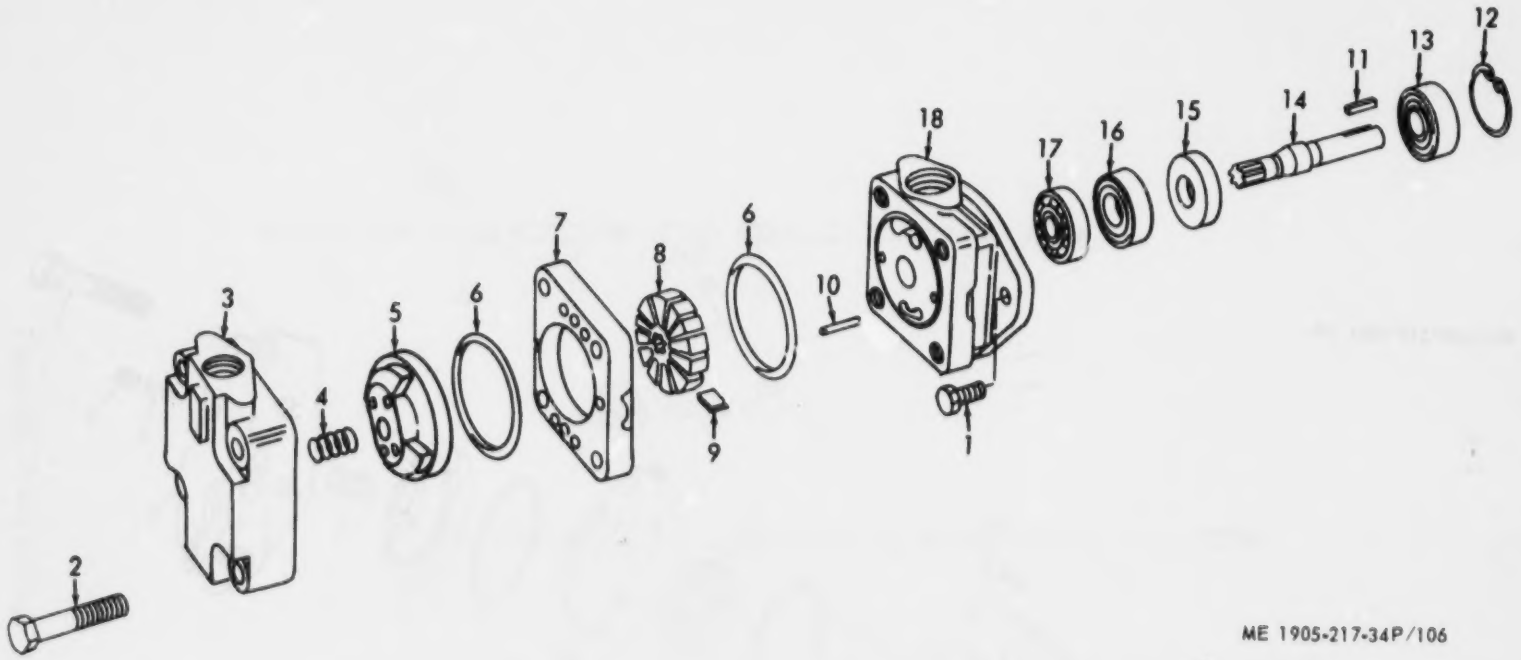

Figure 106. Pump, Steering

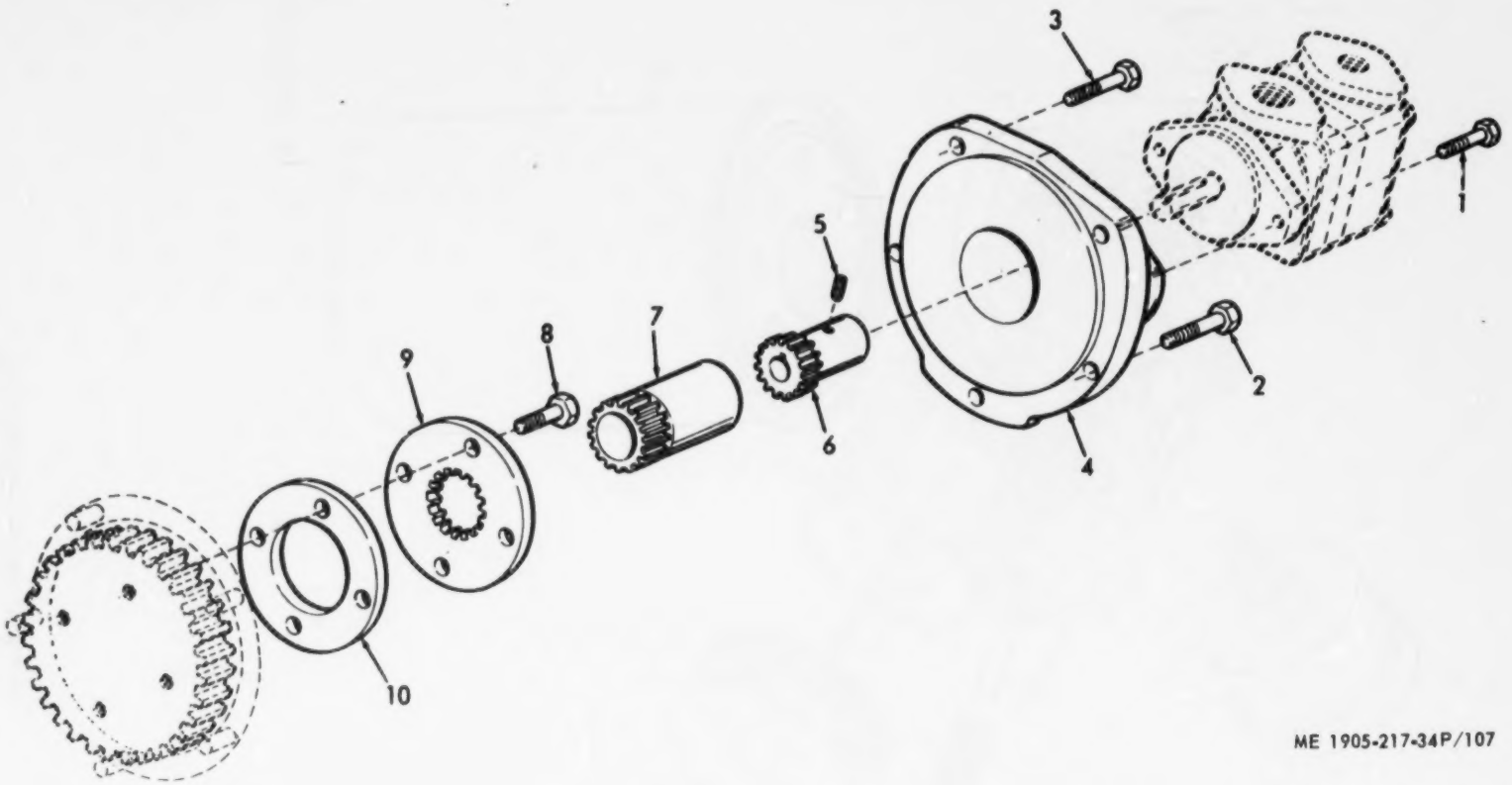

Figure 107. Pump Drive (Coupling)

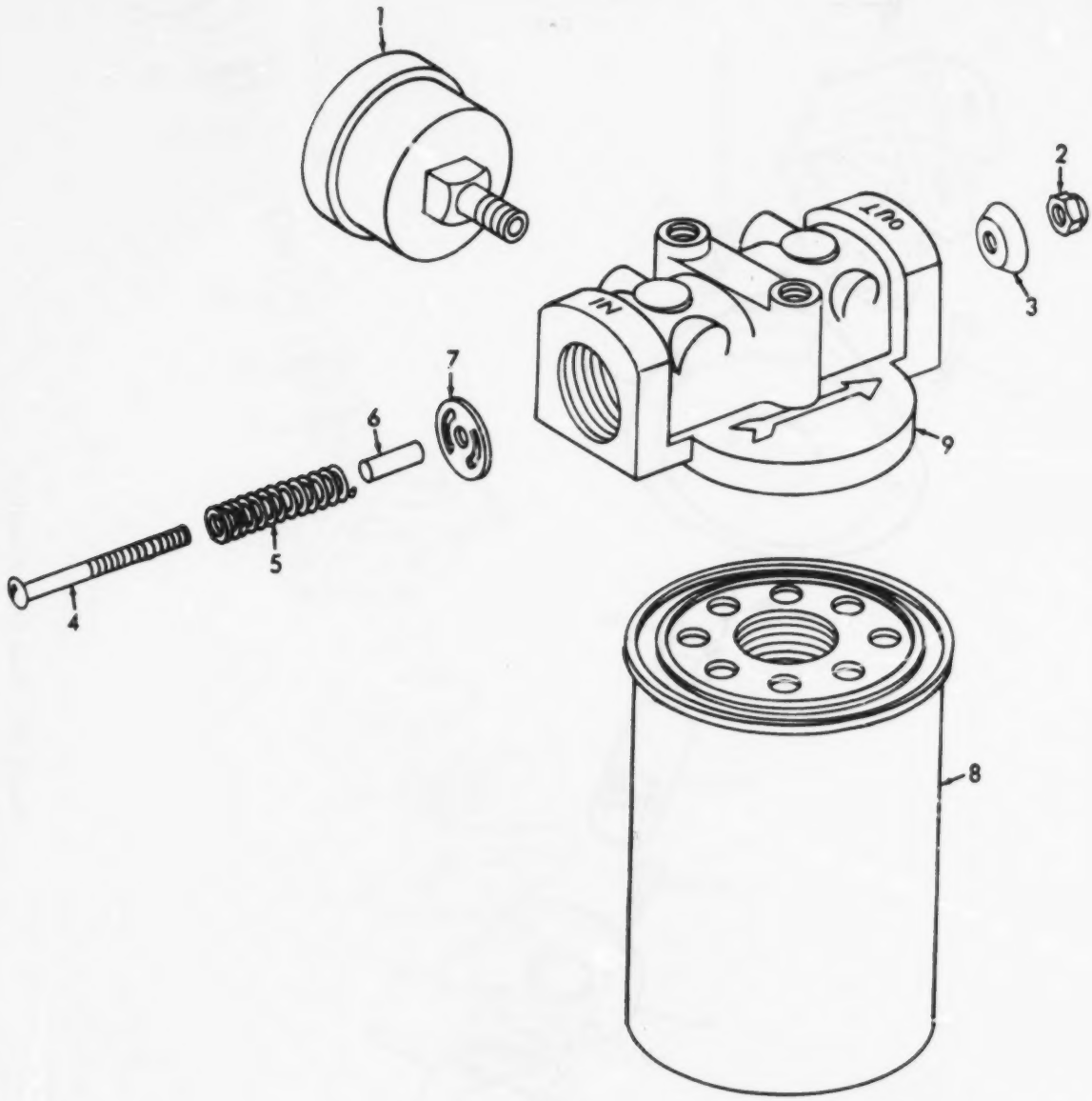

ME 1905-217-34P/108

Figure 108. Filters, Hydraulic

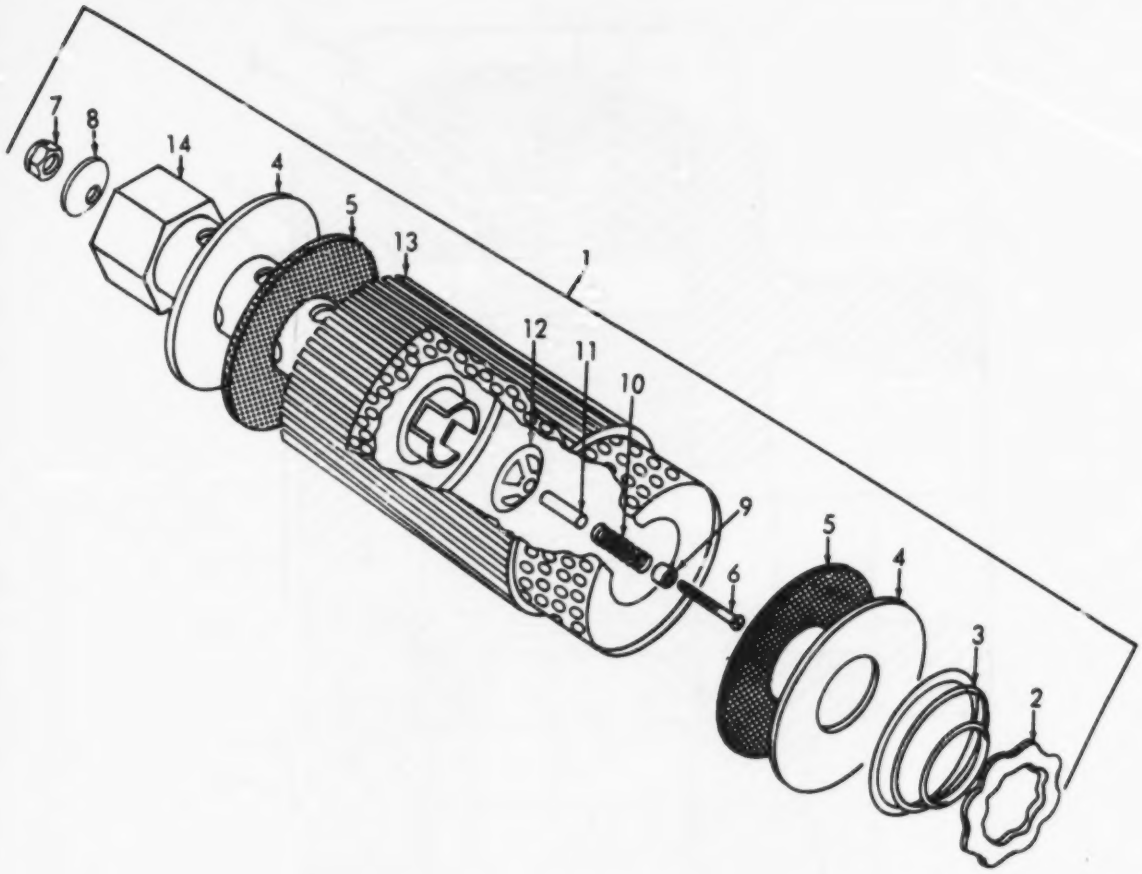

Figure 109. Filters, Hydraulic

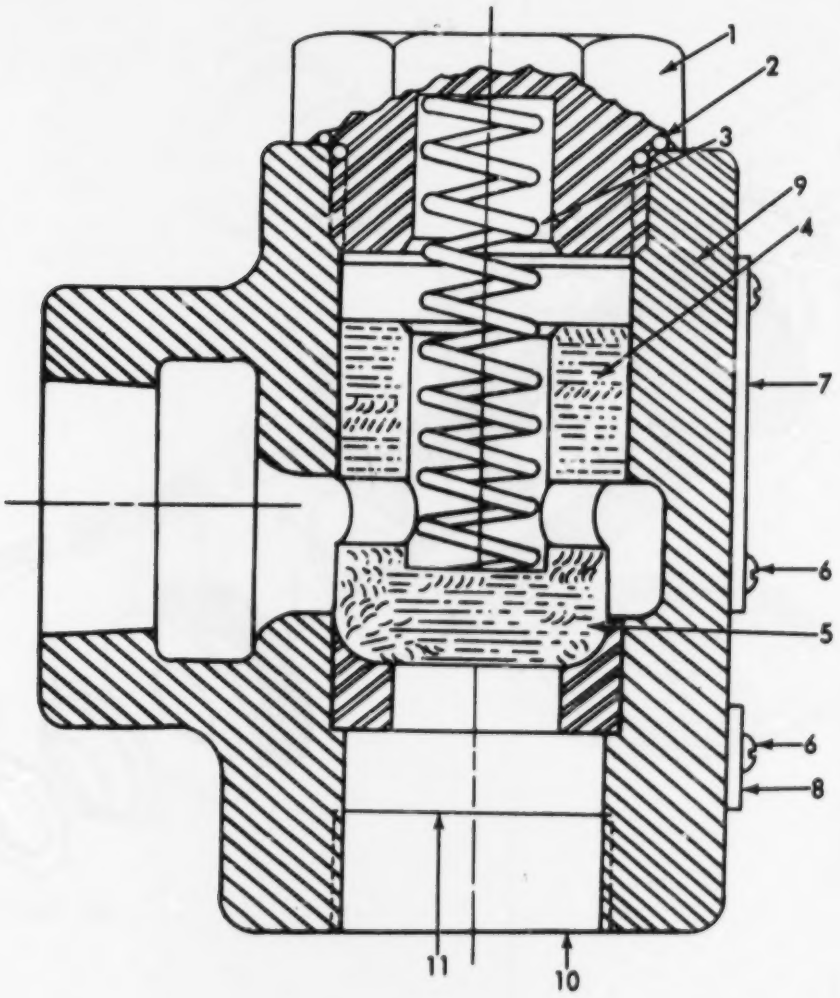

ME 1905-217-34P/110

Figure 110. Valve, Check Steering

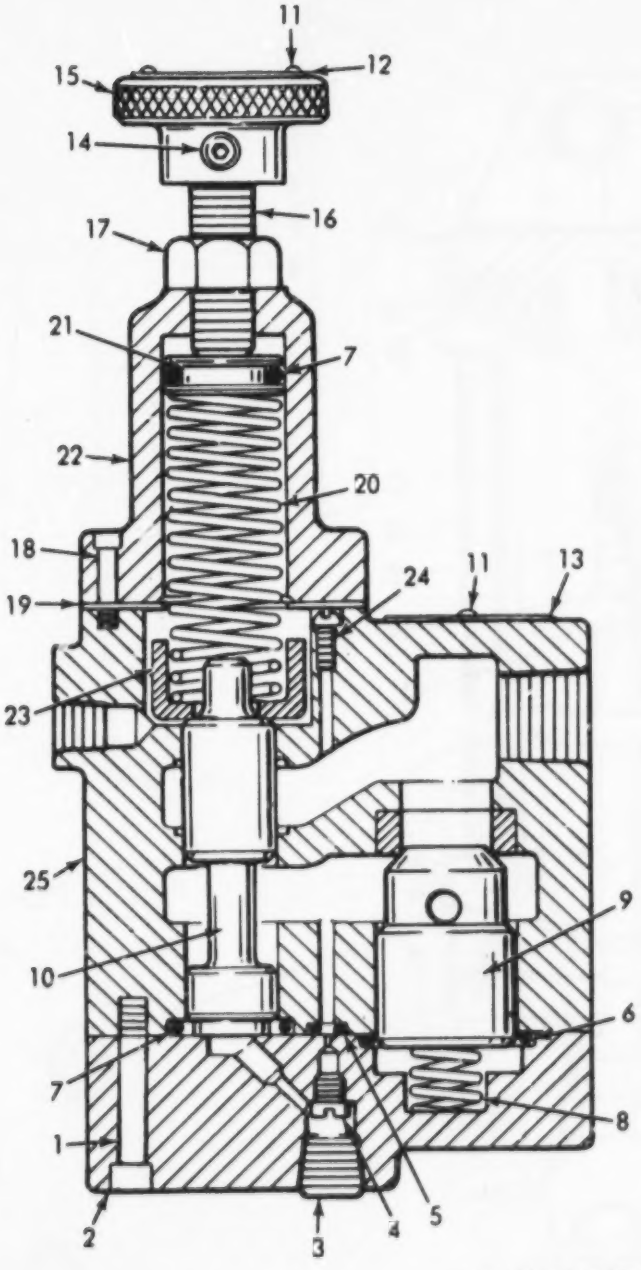

ME 1905-217-34P/111

Figure 111. Valve, By-Pass Steering

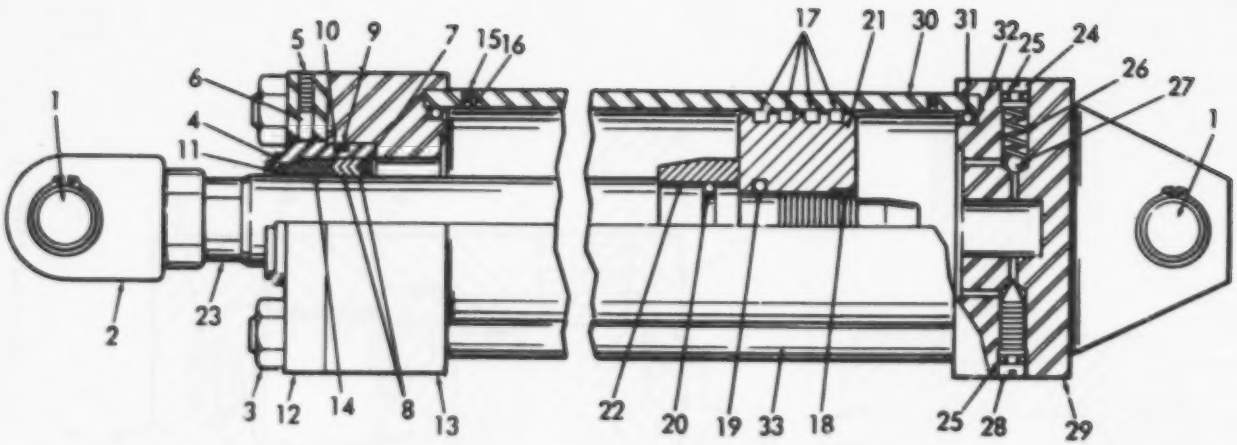

Figure 113. Cylinder, Hydraulic Steering

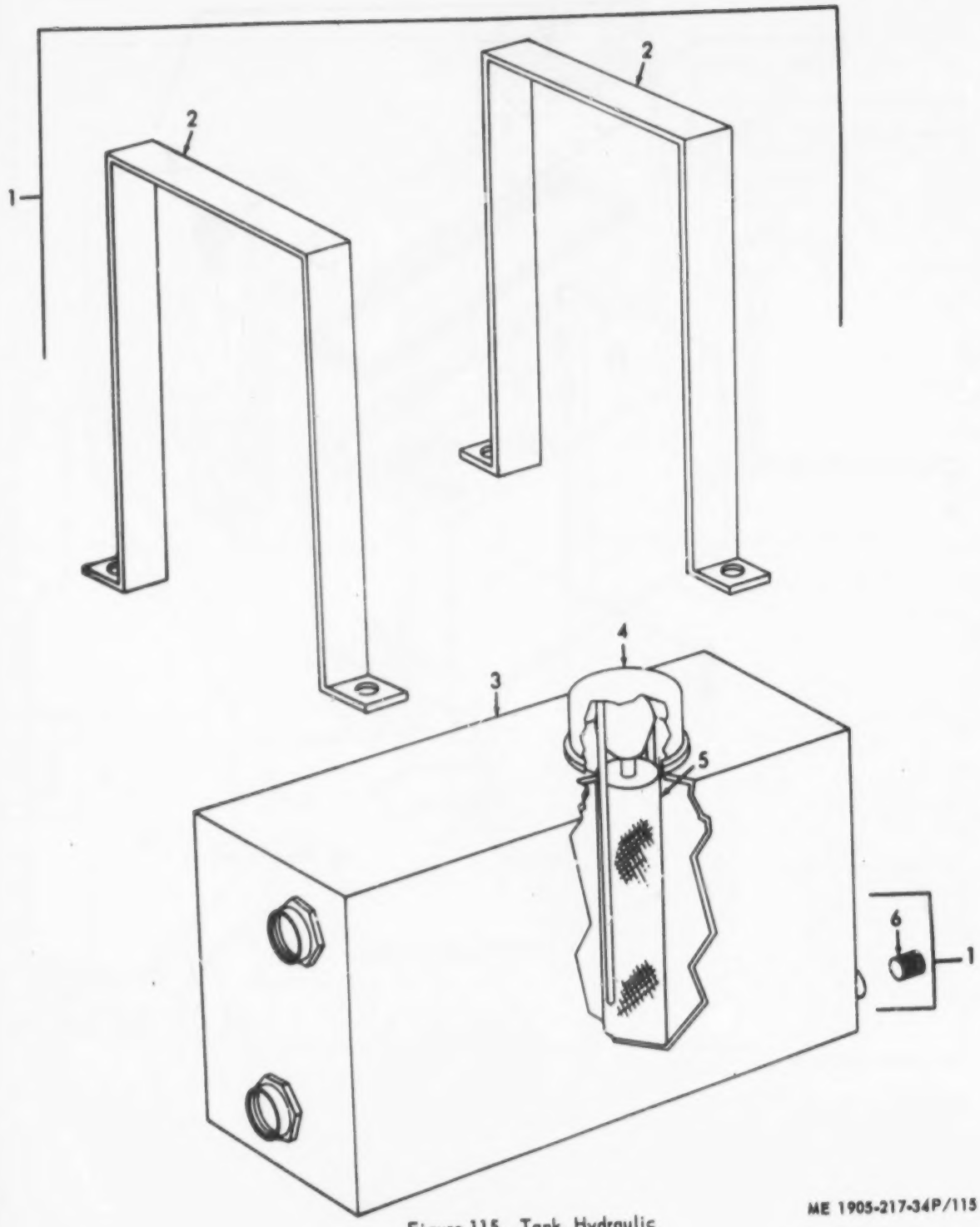

Figure 115. Tank, Hydraulic

ME 1905-217-34P/115

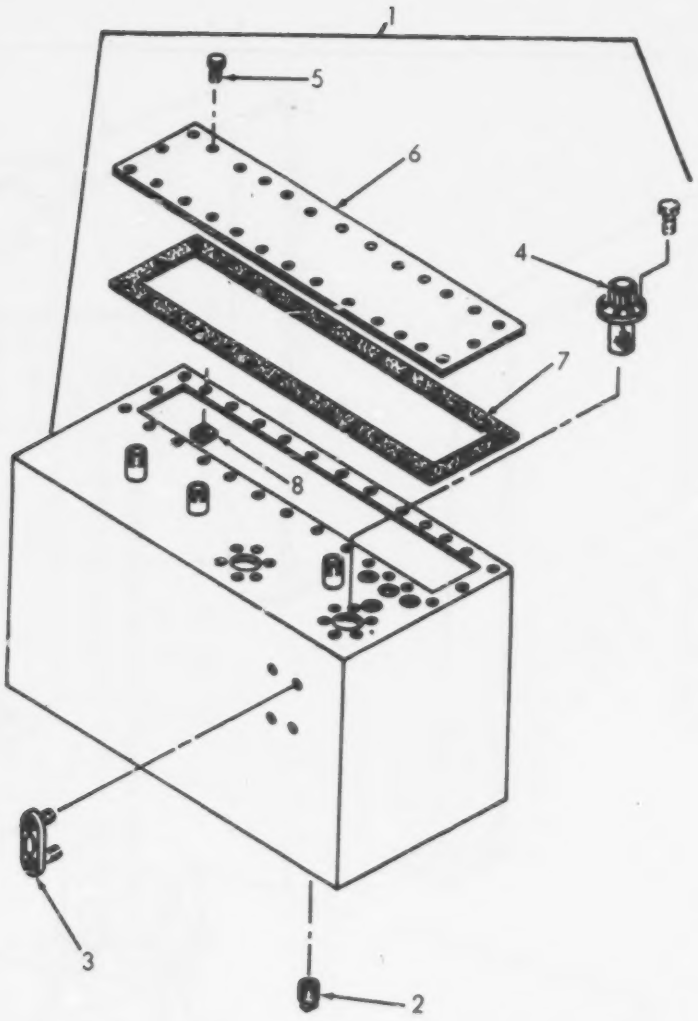

ME 1905-217-34P/117

Figure 117. Tank, Hydraulic

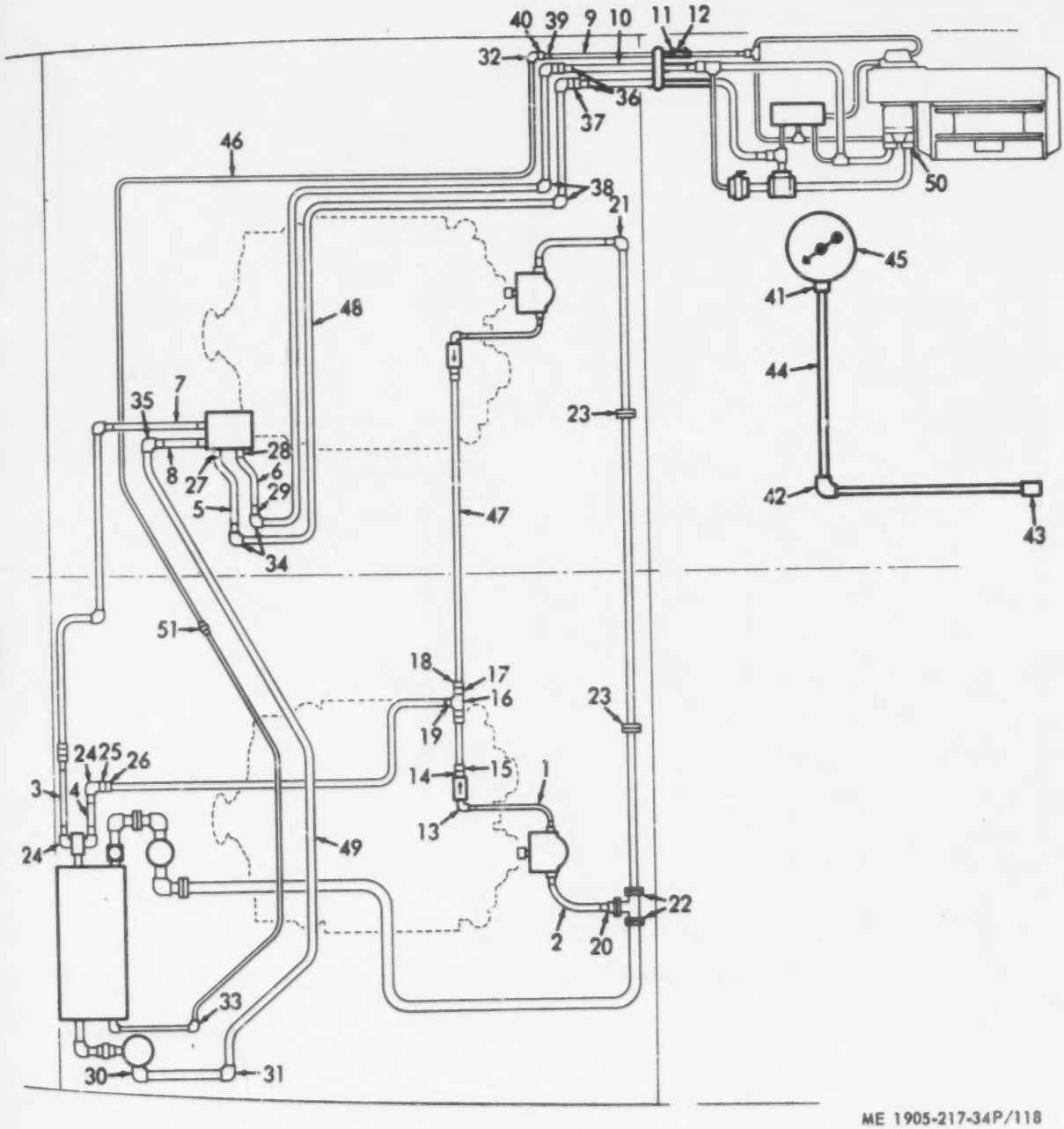

ME 1905-217-34P/118

Figure 118. Piping, Hydraulic Ramp Hoist

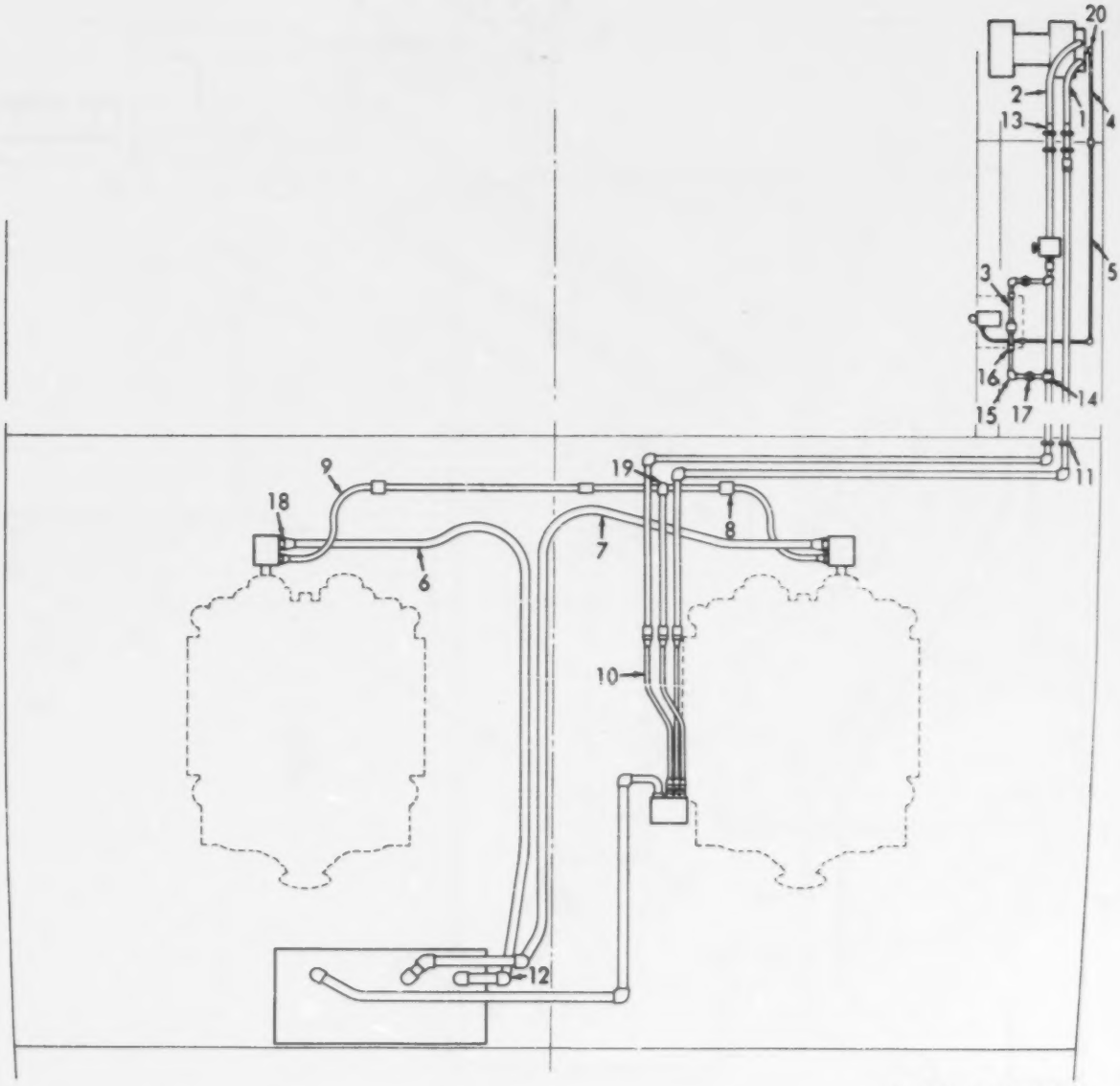

Figure 119. Piping, Hydraulic Ramp Hoist

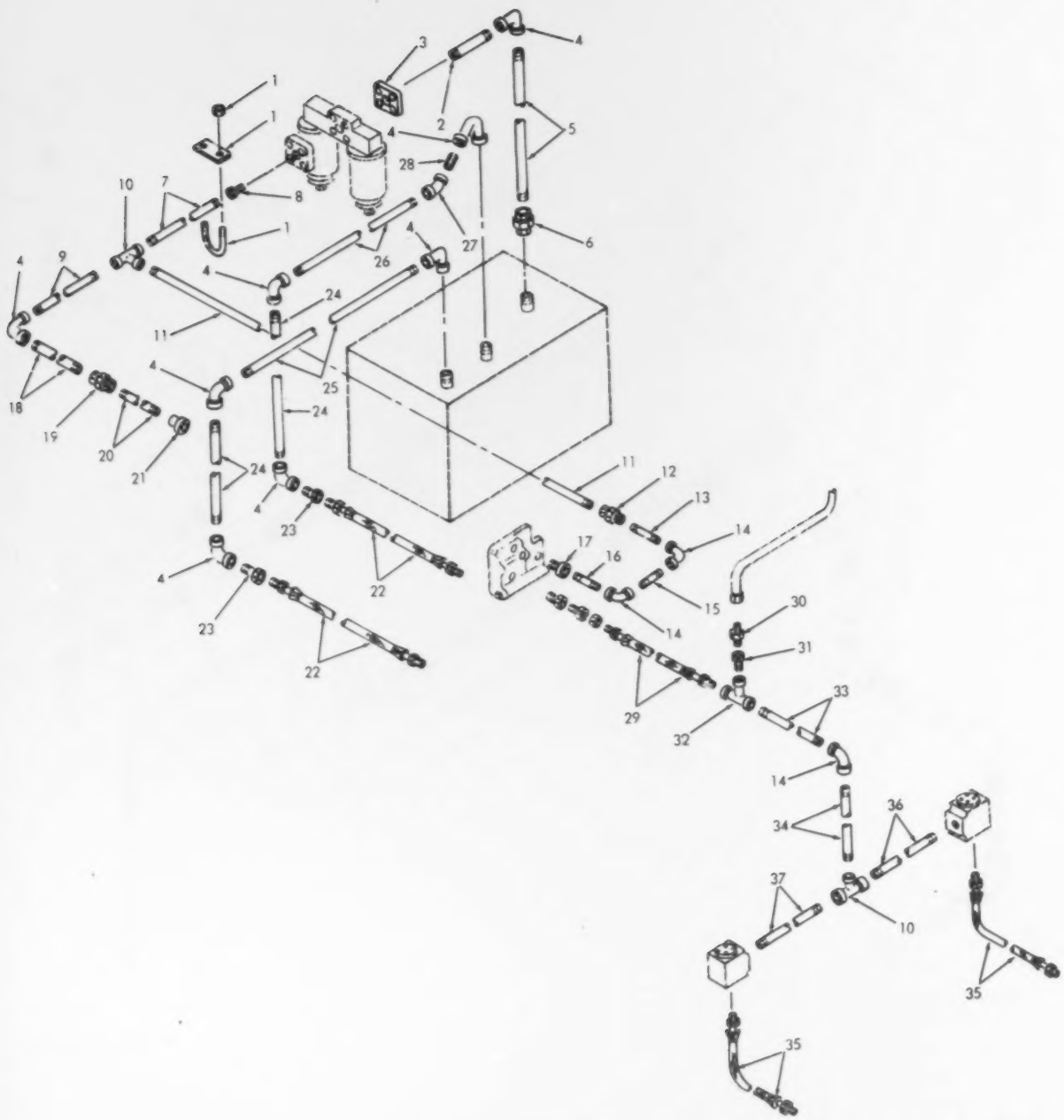

Figure 120. Piping, Hydraulic Ramp Hoist

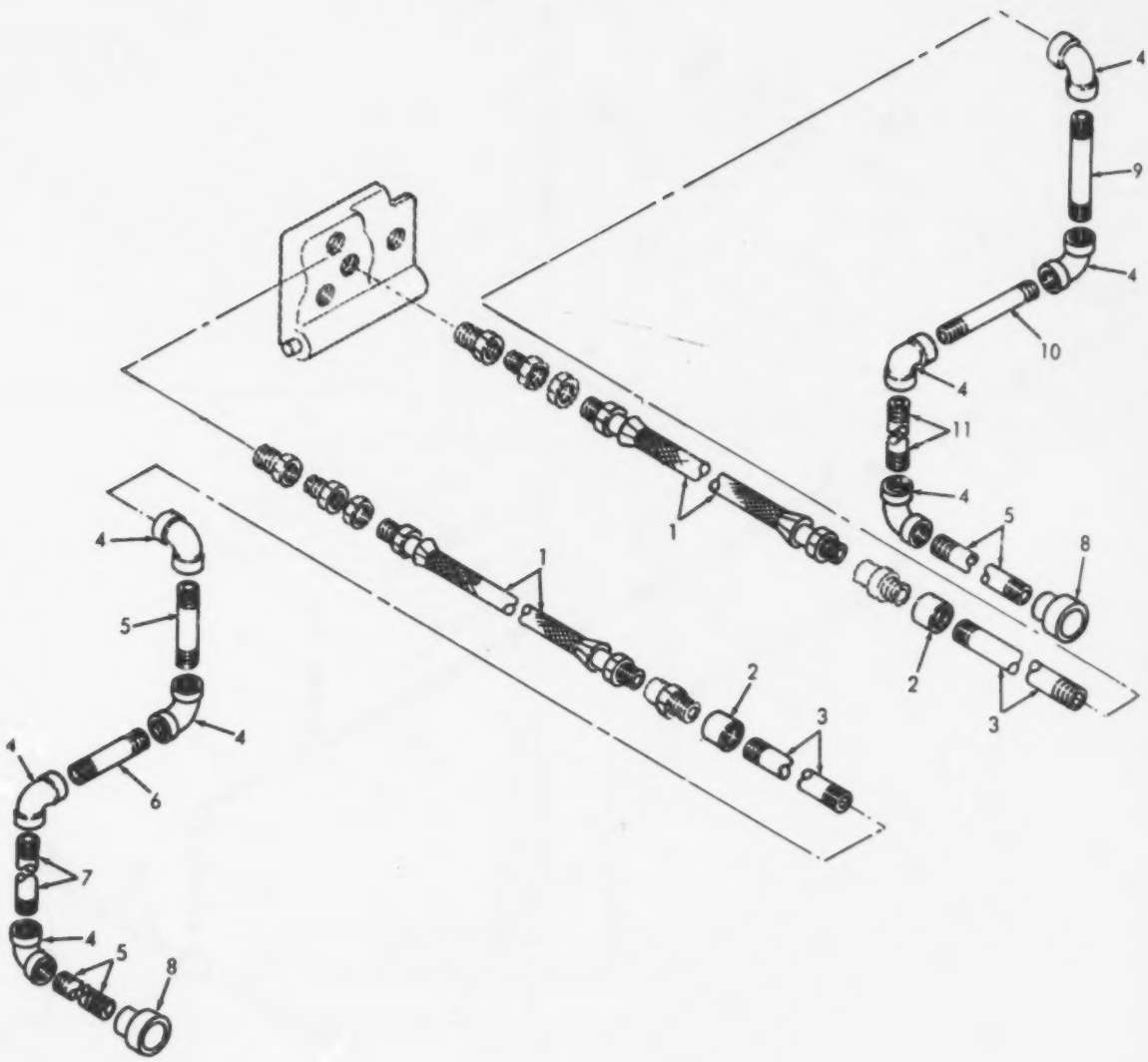

ME 1905-217-34P/121

Figure 121. Piping, Hydraulic Ramp Hoist

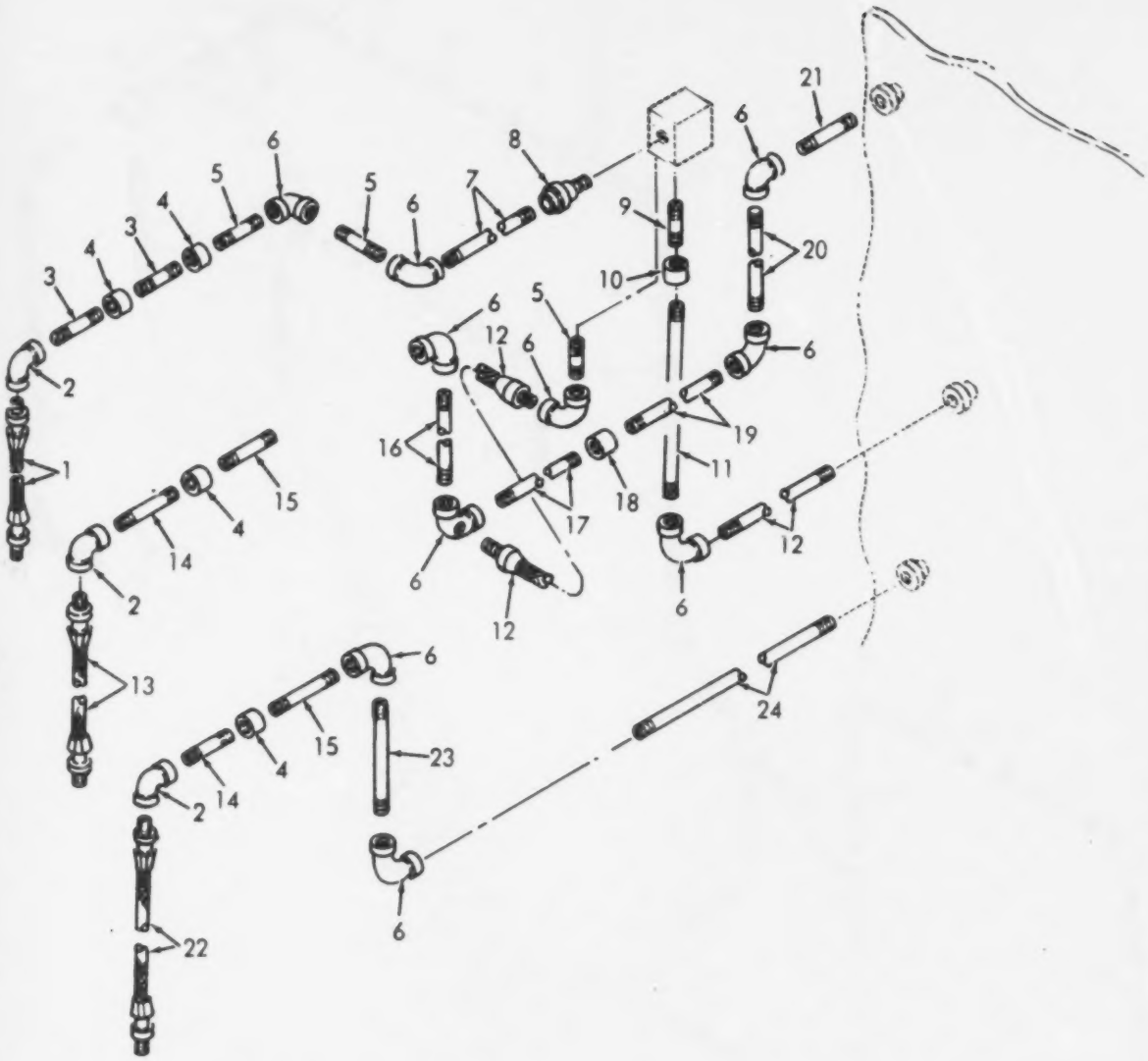

Figure 122. Piping, Hydraulic Ramp Hoist

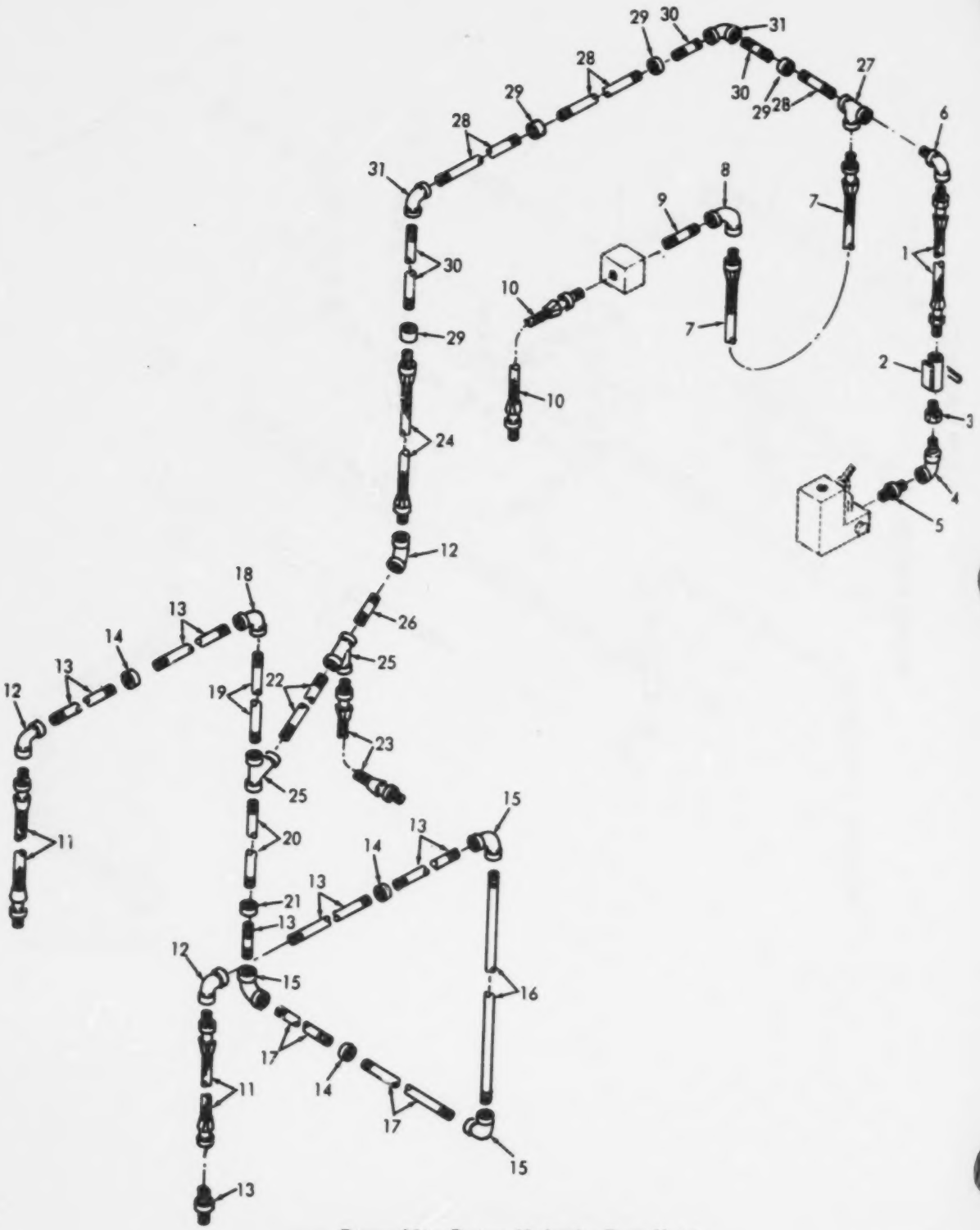

Figure 123. Piping, Hydraulic Ramp Hoist

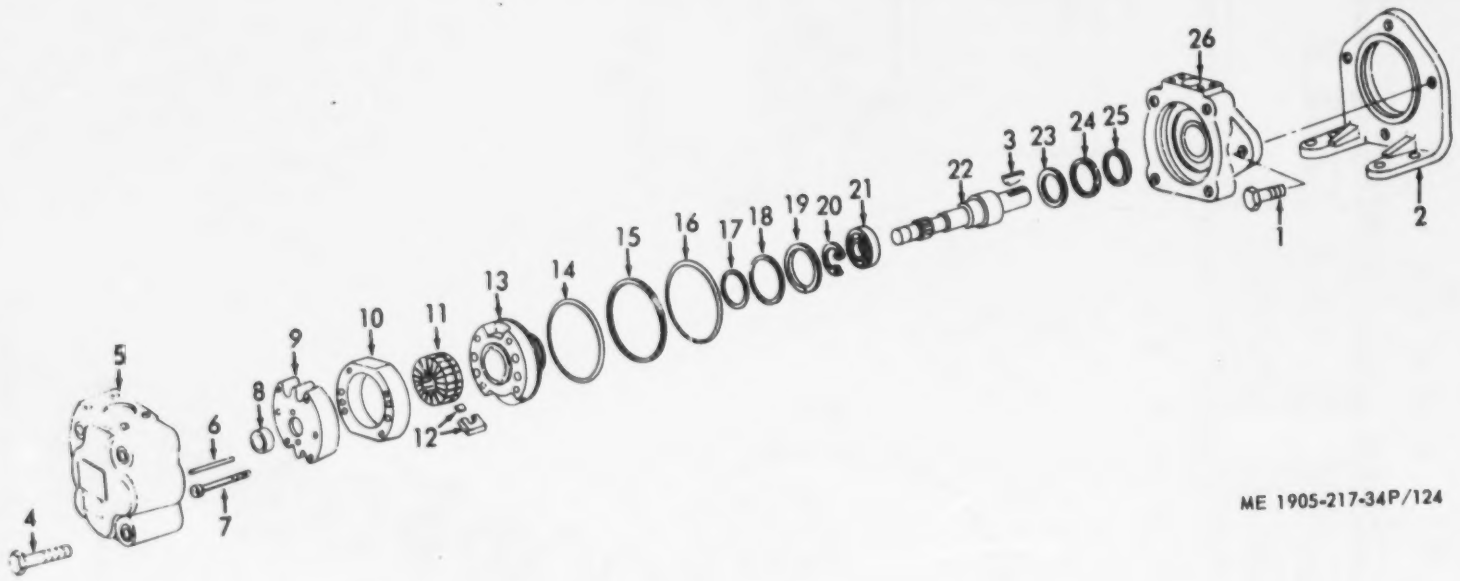

Figure 124. Pump, Hydraulic (Ramp)

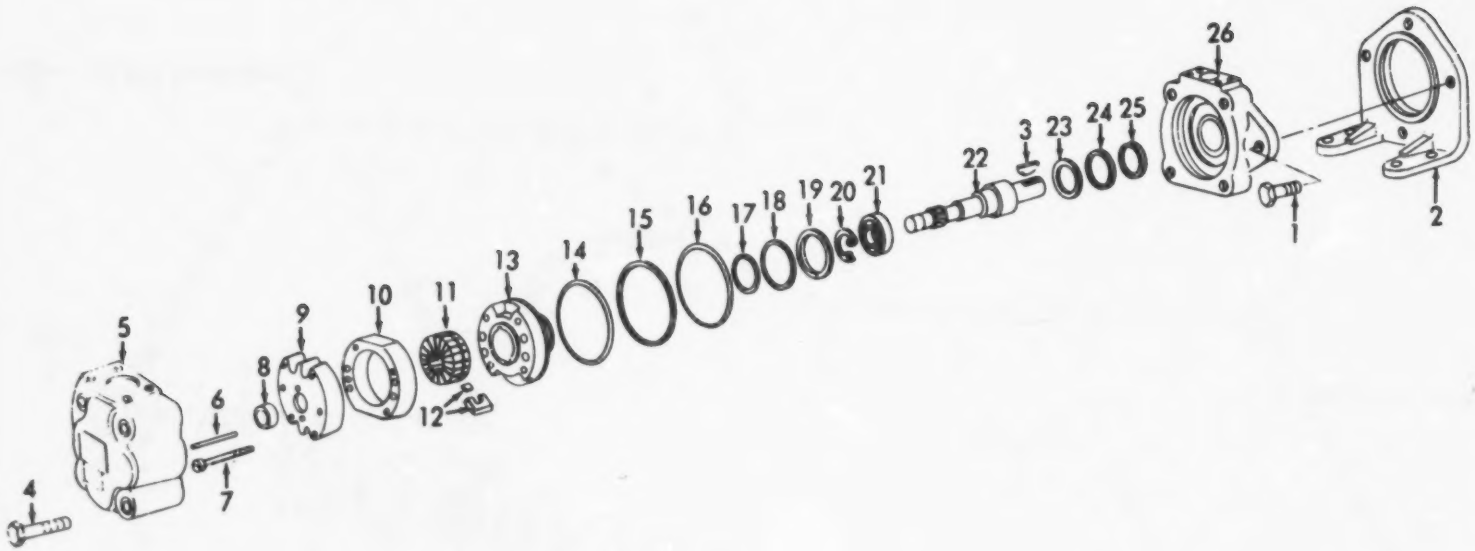

ME 1905-217-34P/125

Figure 125. Pump, Hydraulic (Ramp)

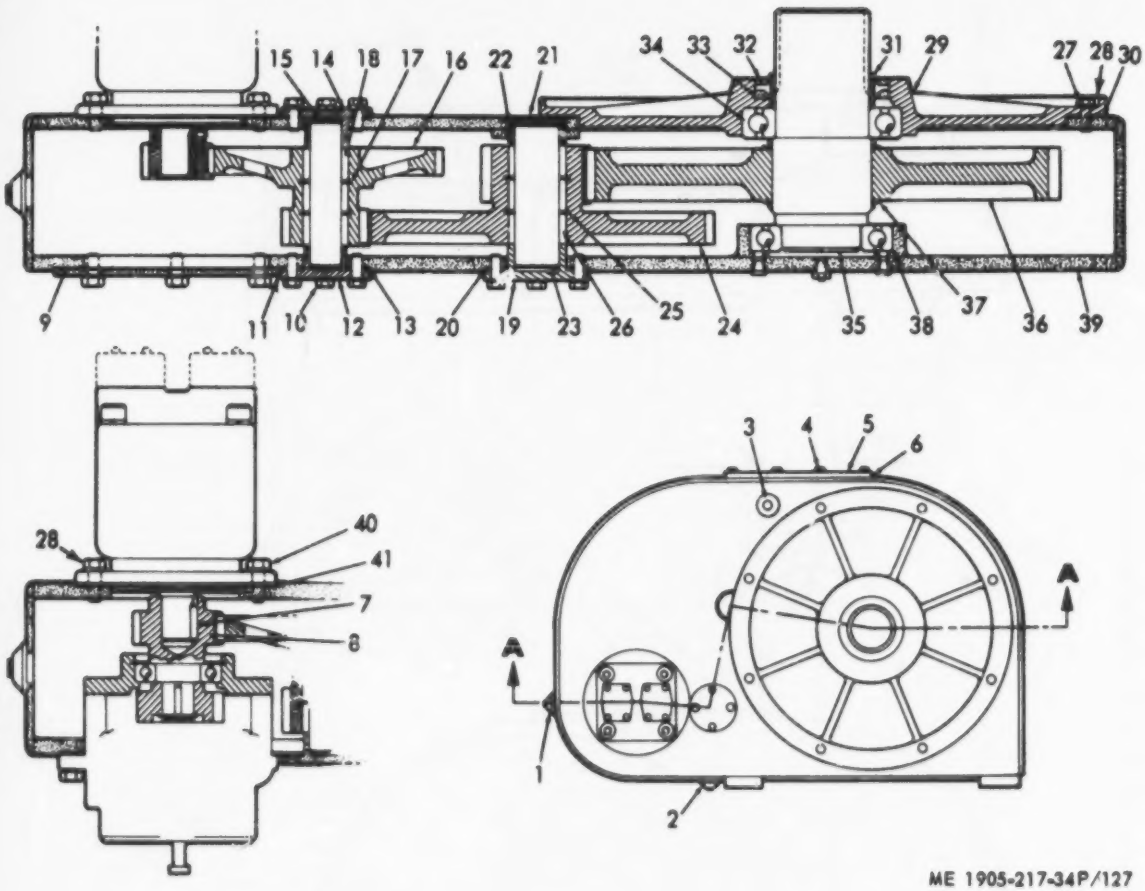

Figure 127. Winch Gear Reduction

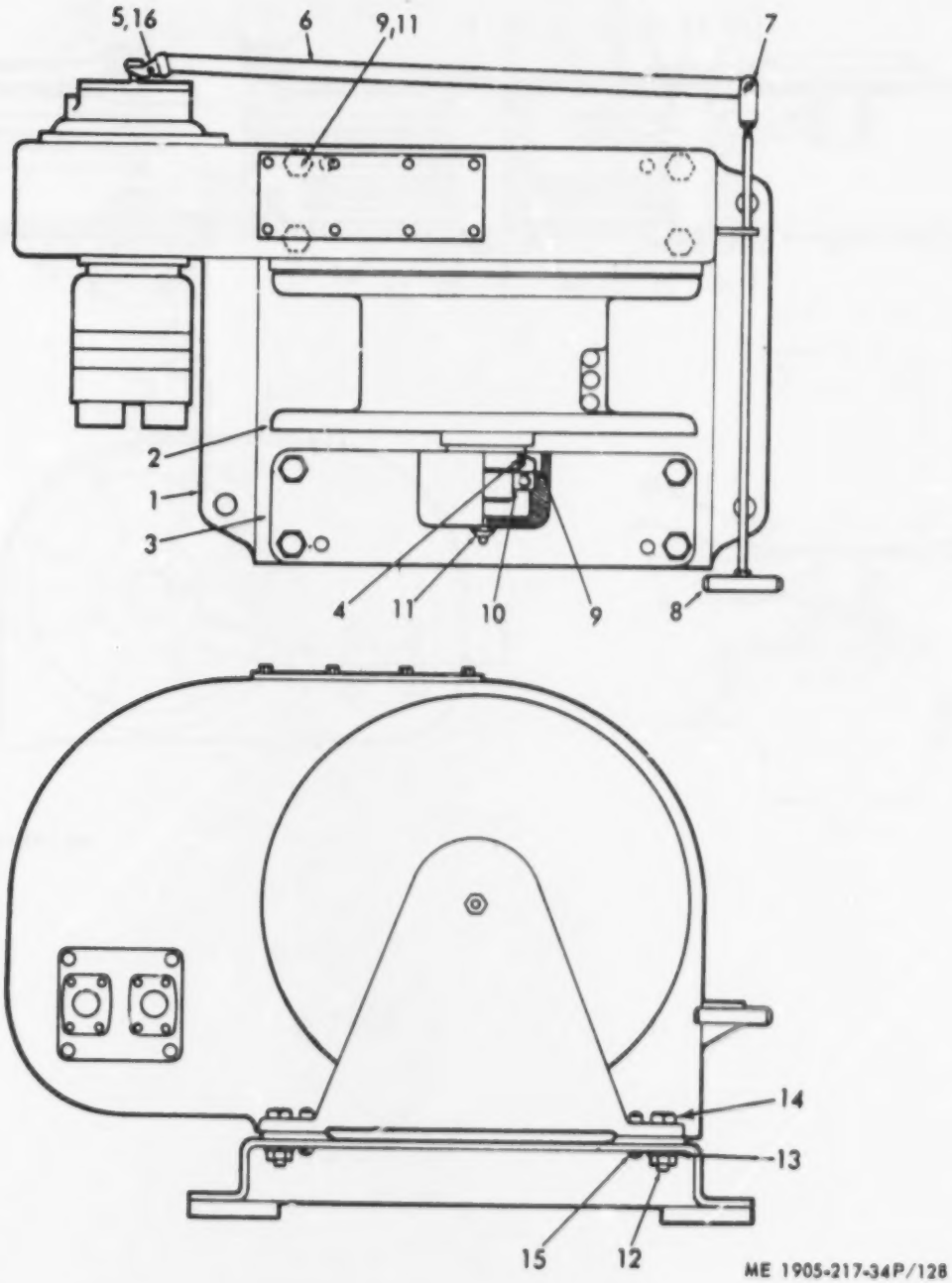

Figure 128. Winch Base

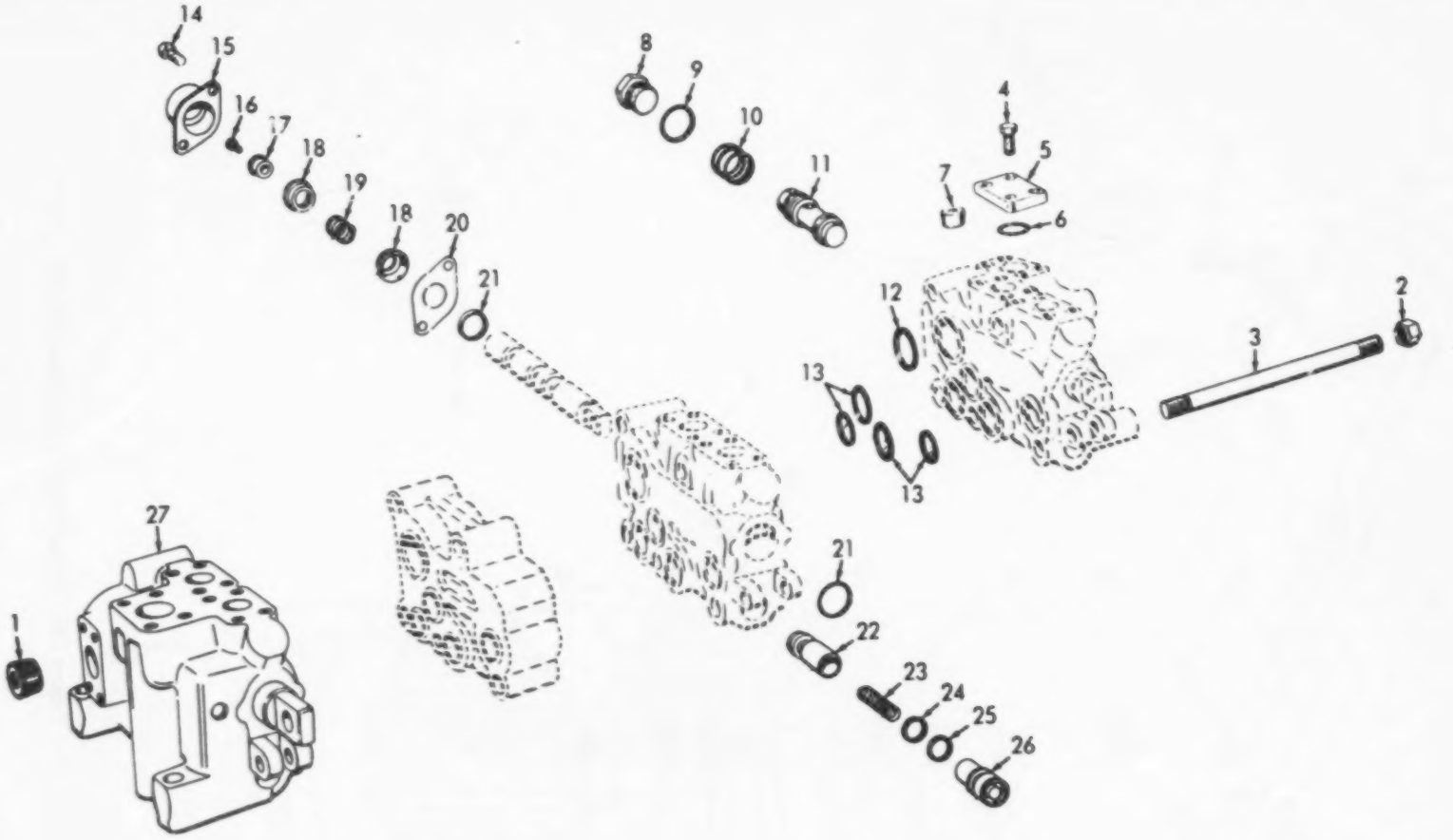

ME 1905-217-34P/139①

Figure 139. Valve, Ramp Control (Sheet 1 of 2)

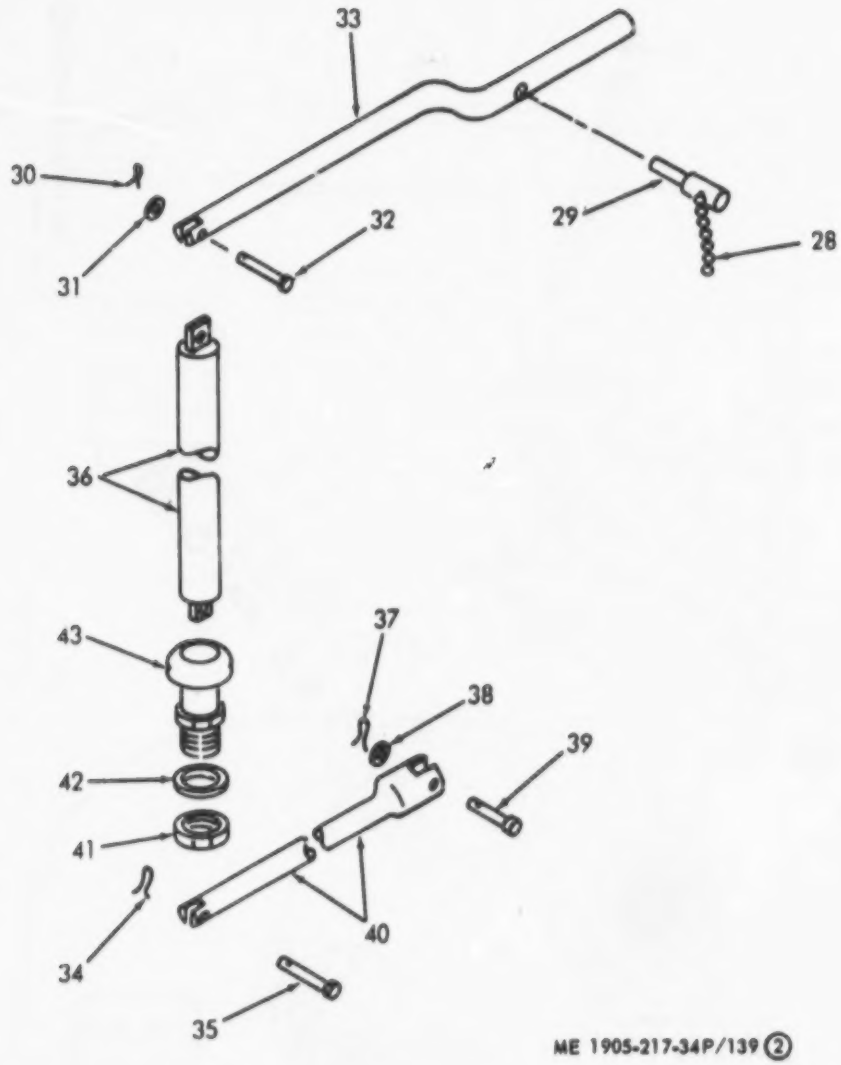

Figure 139. Valve Ramp Control (Sheet 2 of 2)

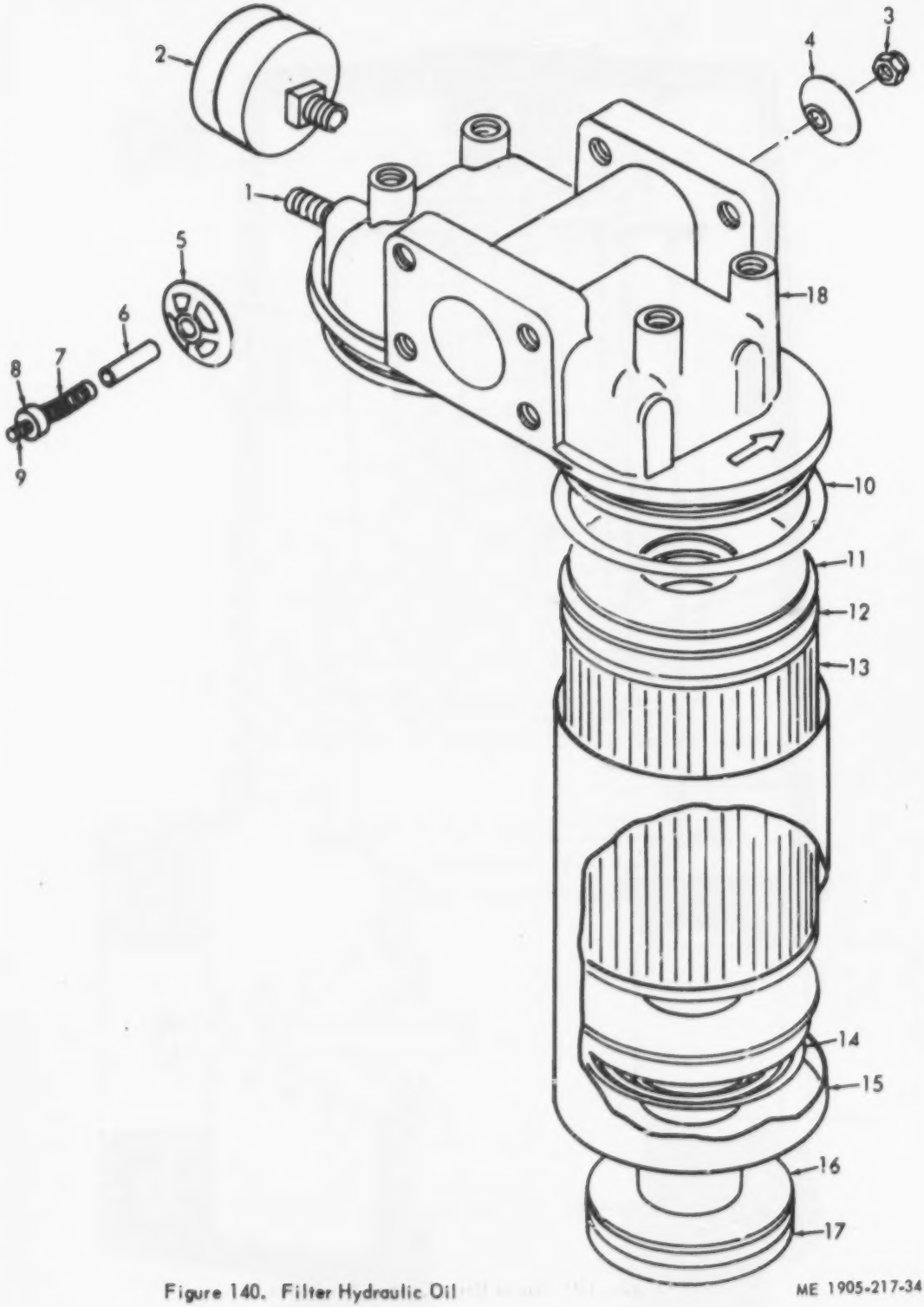

Figure 140. Filter Hydraulic Oil

ME 1905-217-34P/140

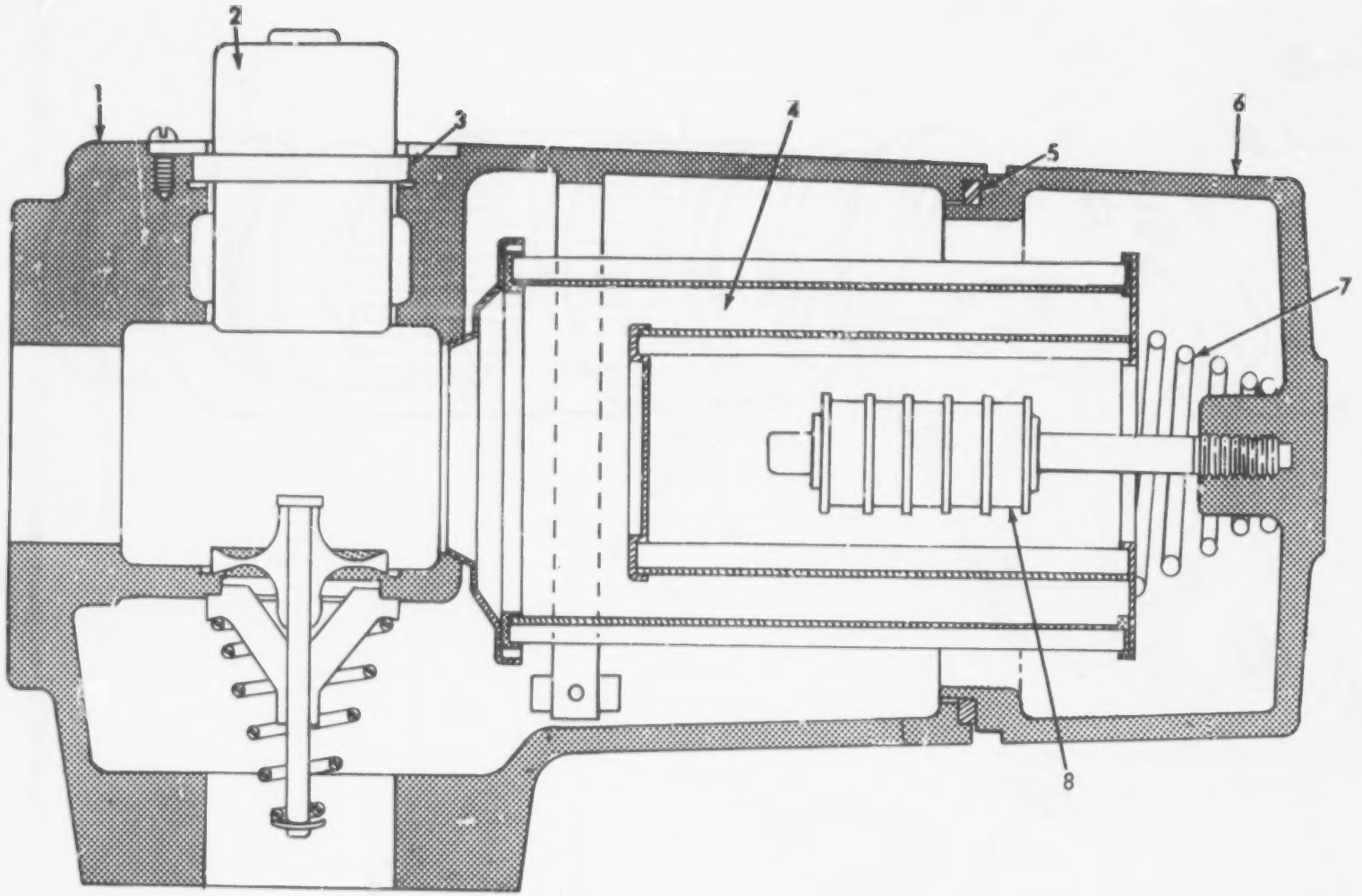

Figure 141. Strainer Hydrauli c Oil

ME 1905-217-34P/141

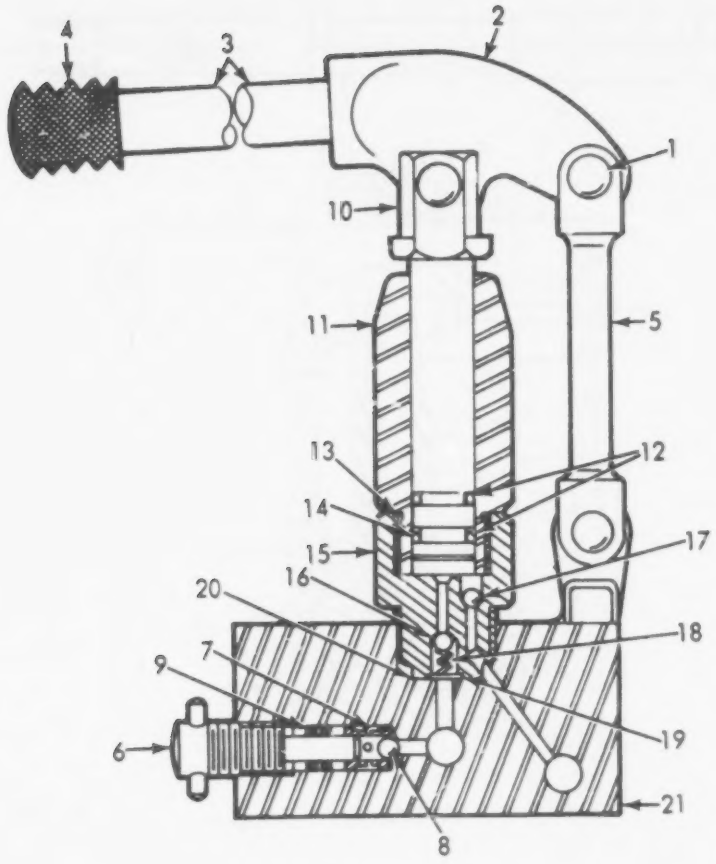

ME 1905-217-34P/145

Figure 145. Hand Pump Hydraulic

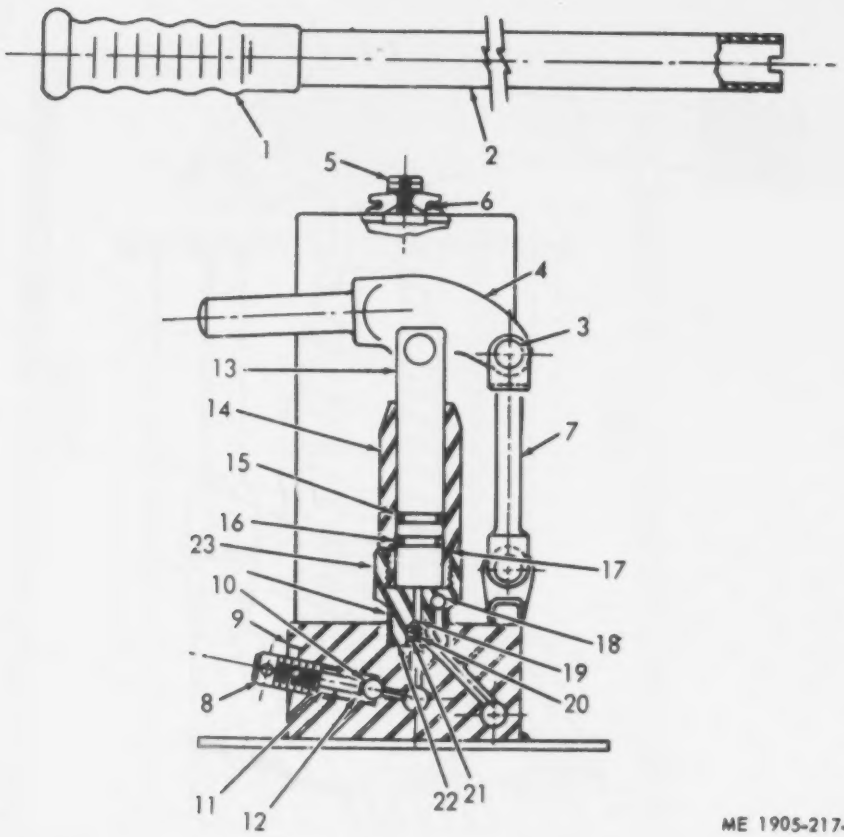

ME 1905-217-34P/146

Figure 146. Hand Pump Hydraulic

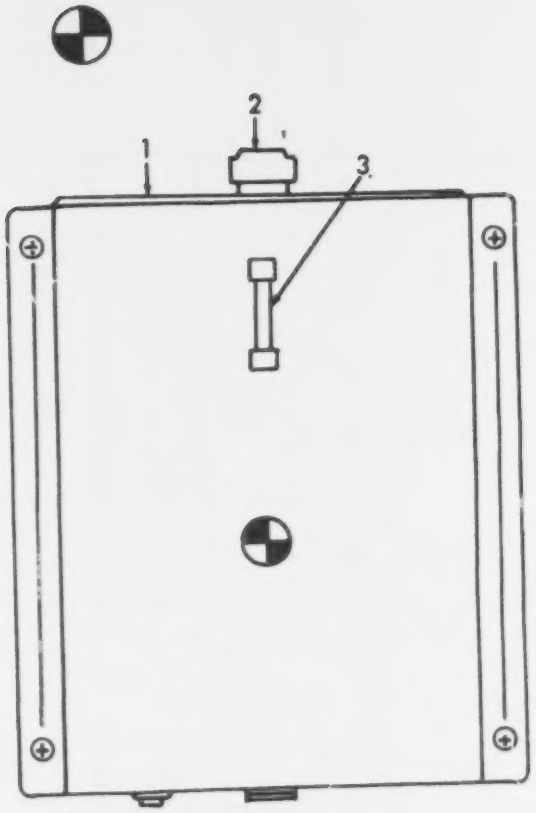

ME 1905-217-34P/147

Figure 147. Tanks, Hydraulic Oil Winch

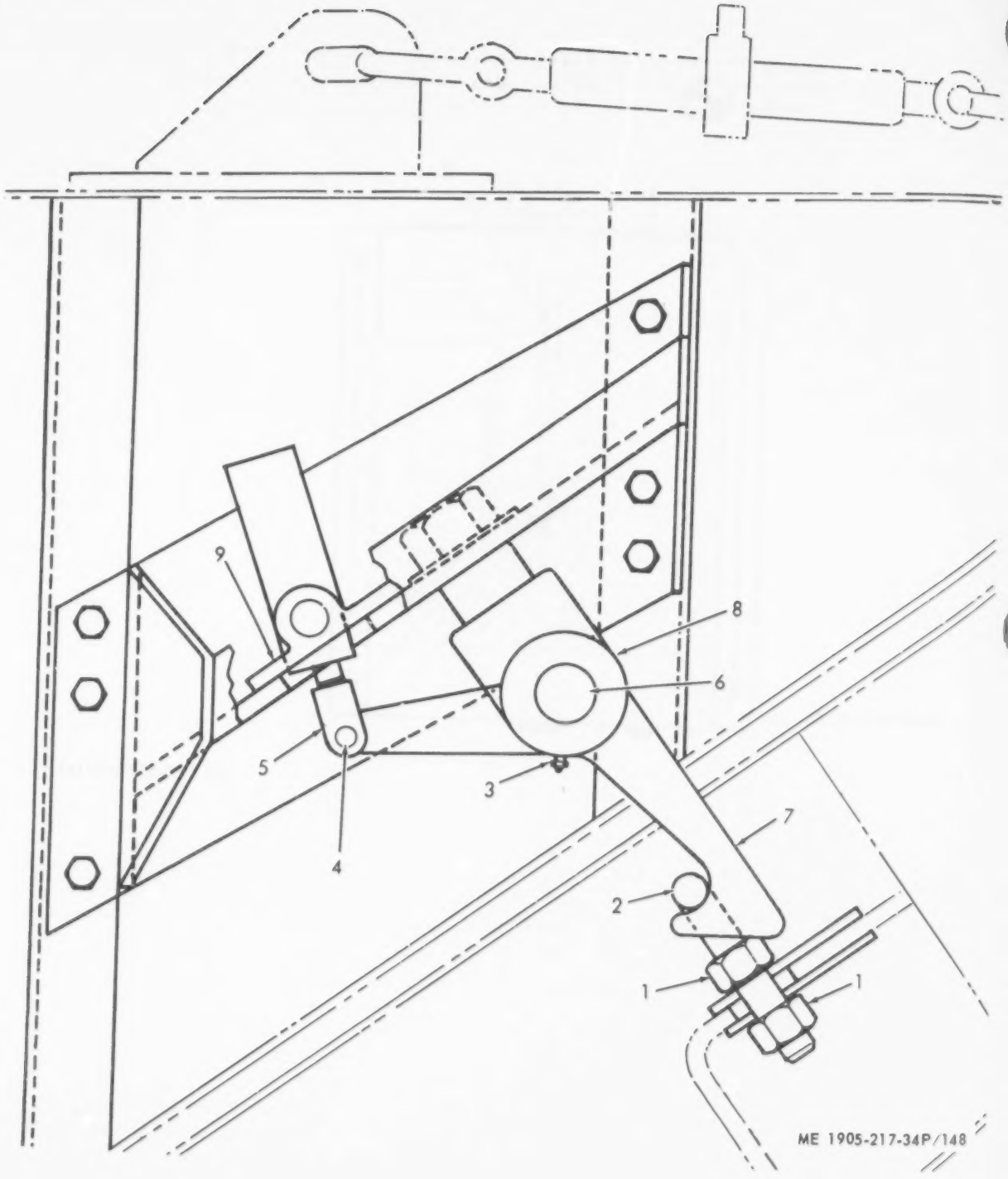

Figure 148. Ramp Latches

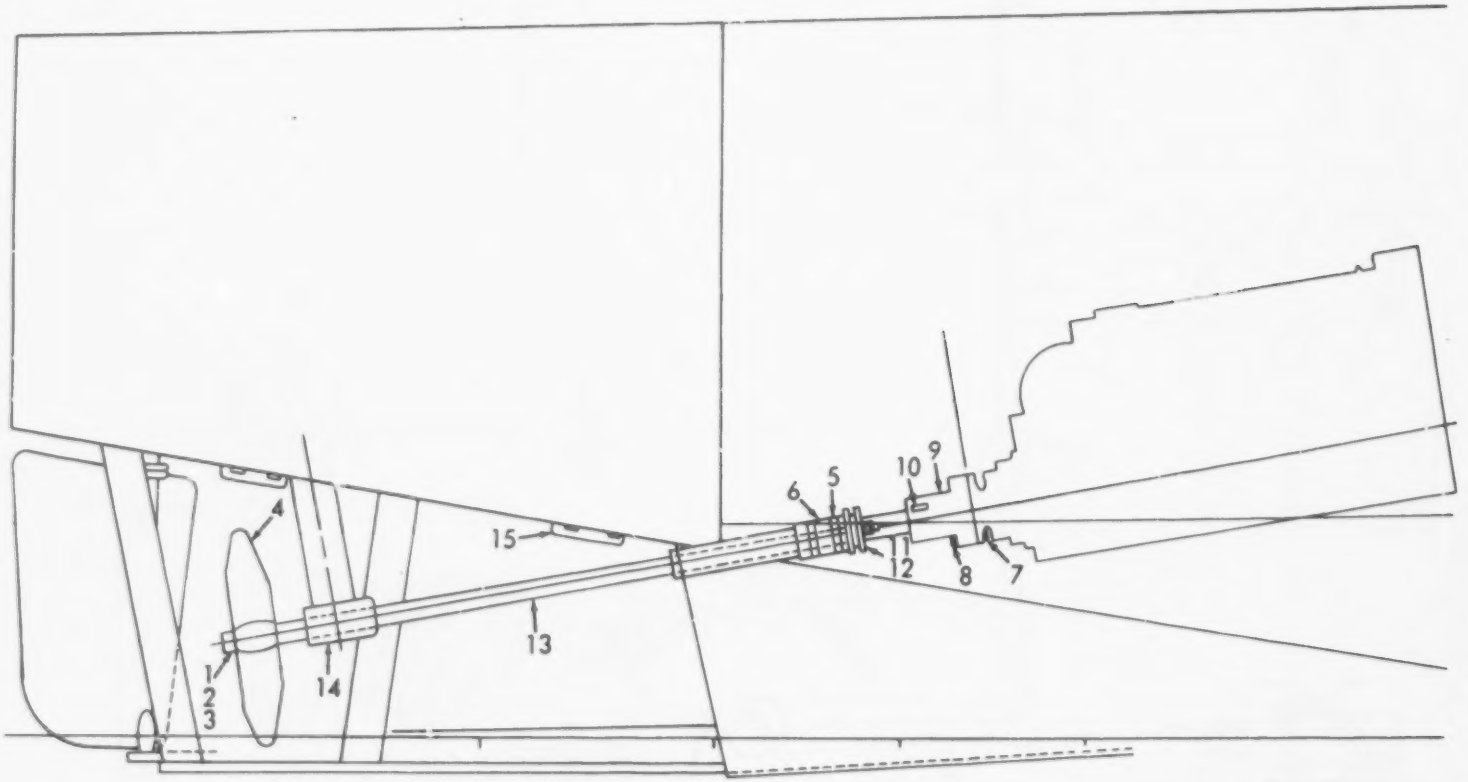

Figure 150. Propeller Shaft

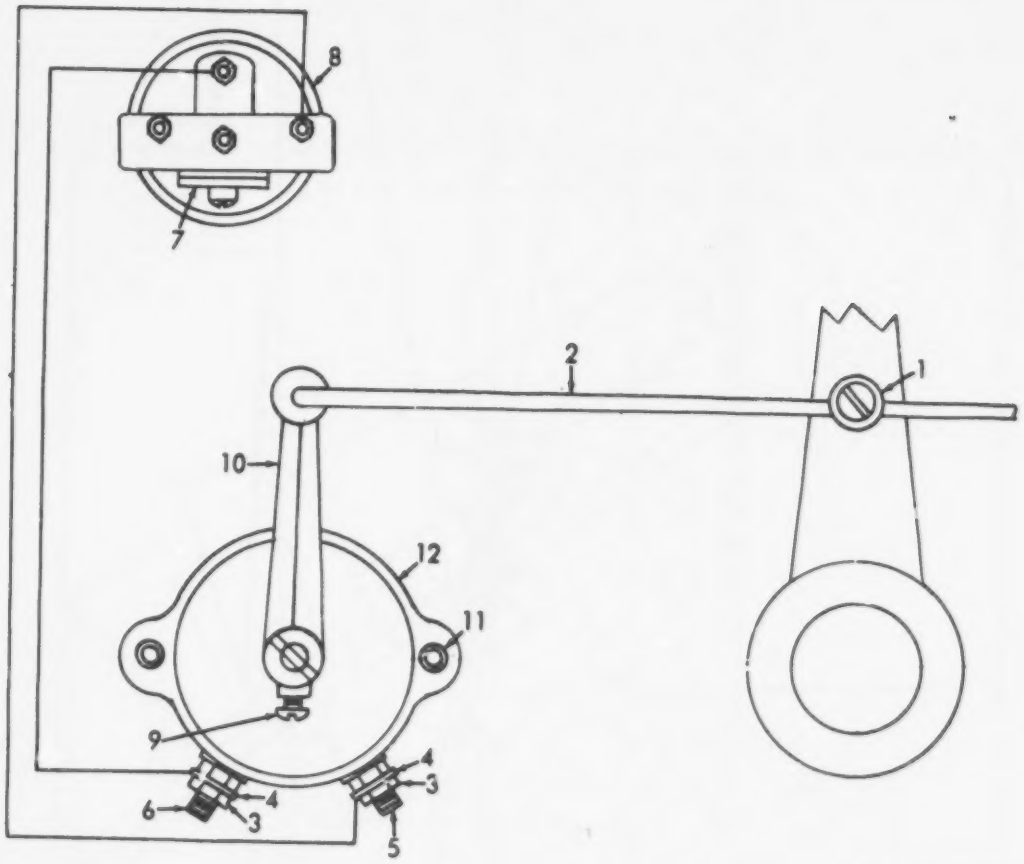

ME 1905-217-34P/152

Figure 152. Indicator, Rudder Angle and Transmitter

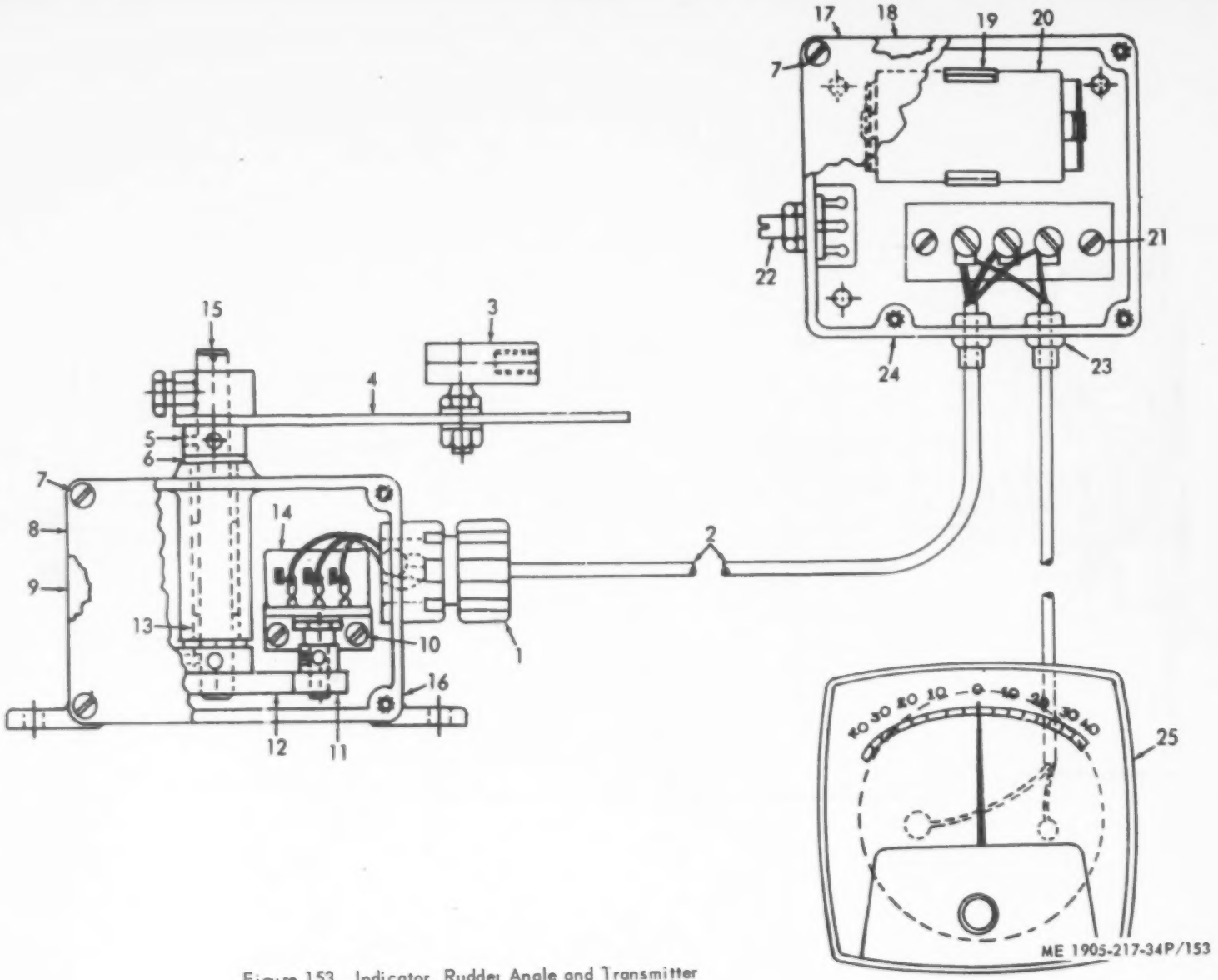

Figure 153. Indicator, Rudder Angle and Transmitter

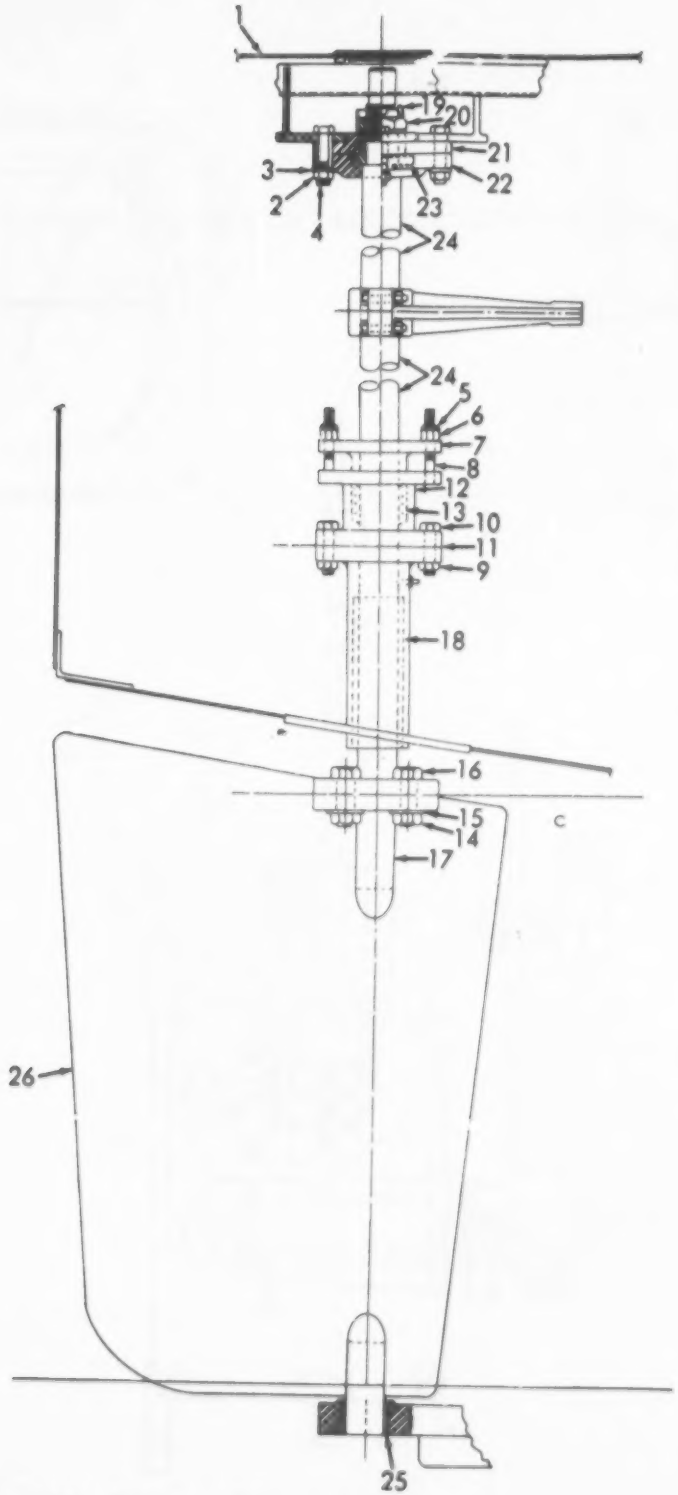

Figure 154. Rudder and Tiller

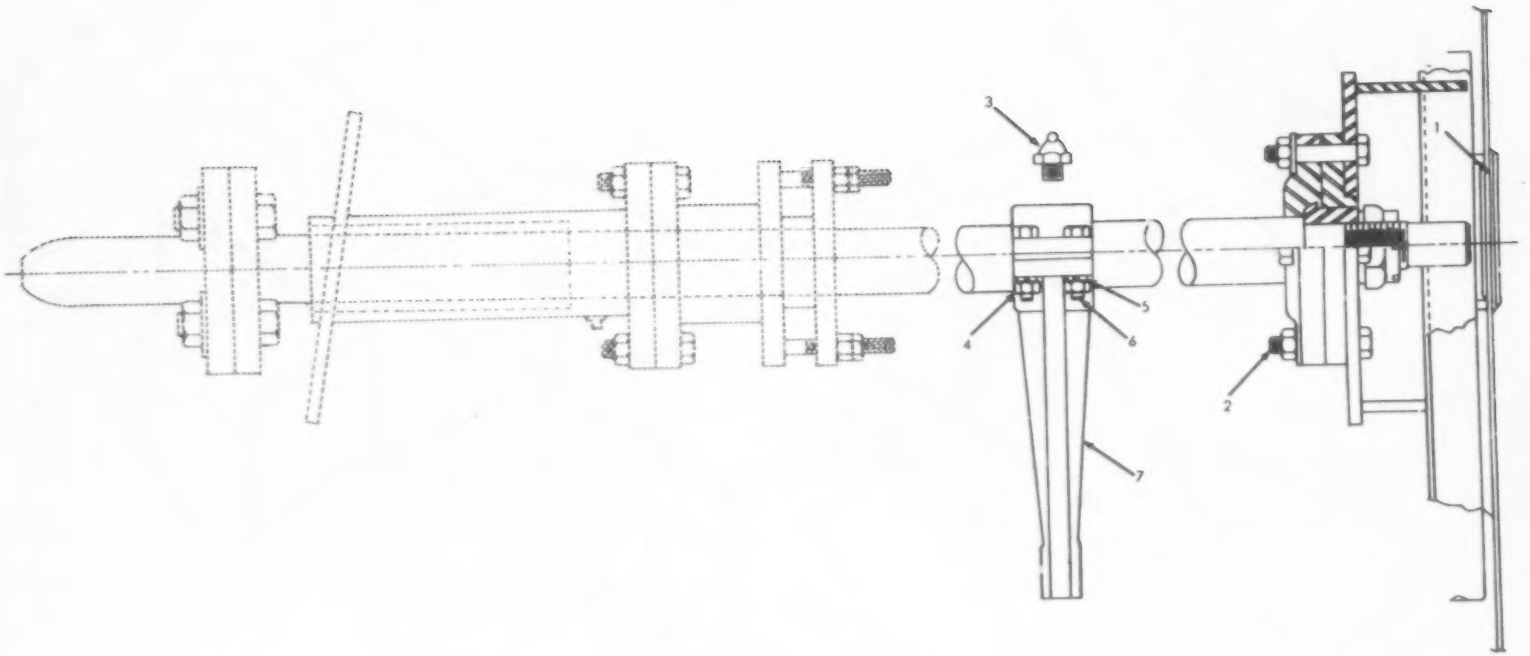

ME 1905-217-34P/155

Figure 155. Rudder and Tiller

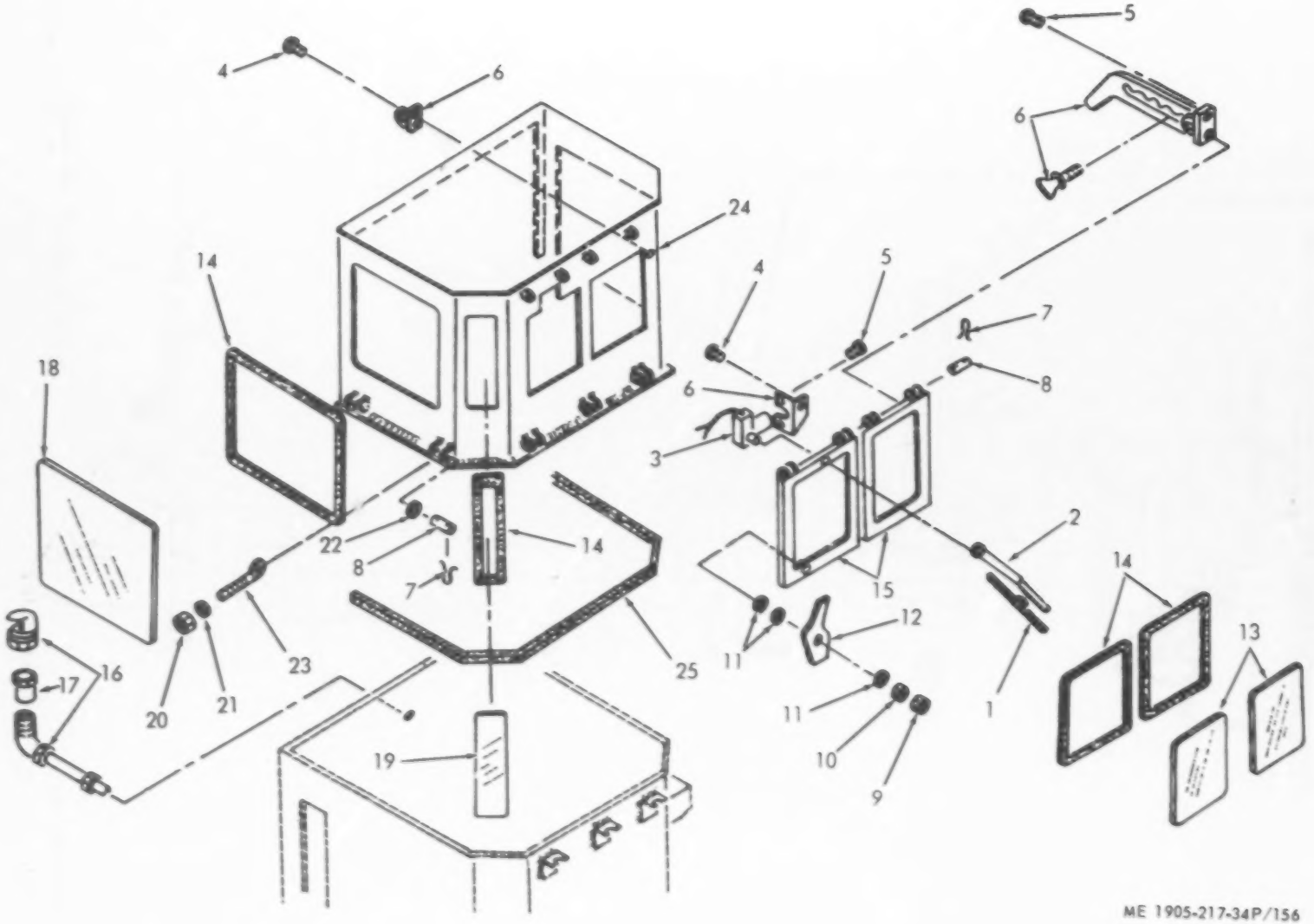

Figure 156. Pilot House Canopy

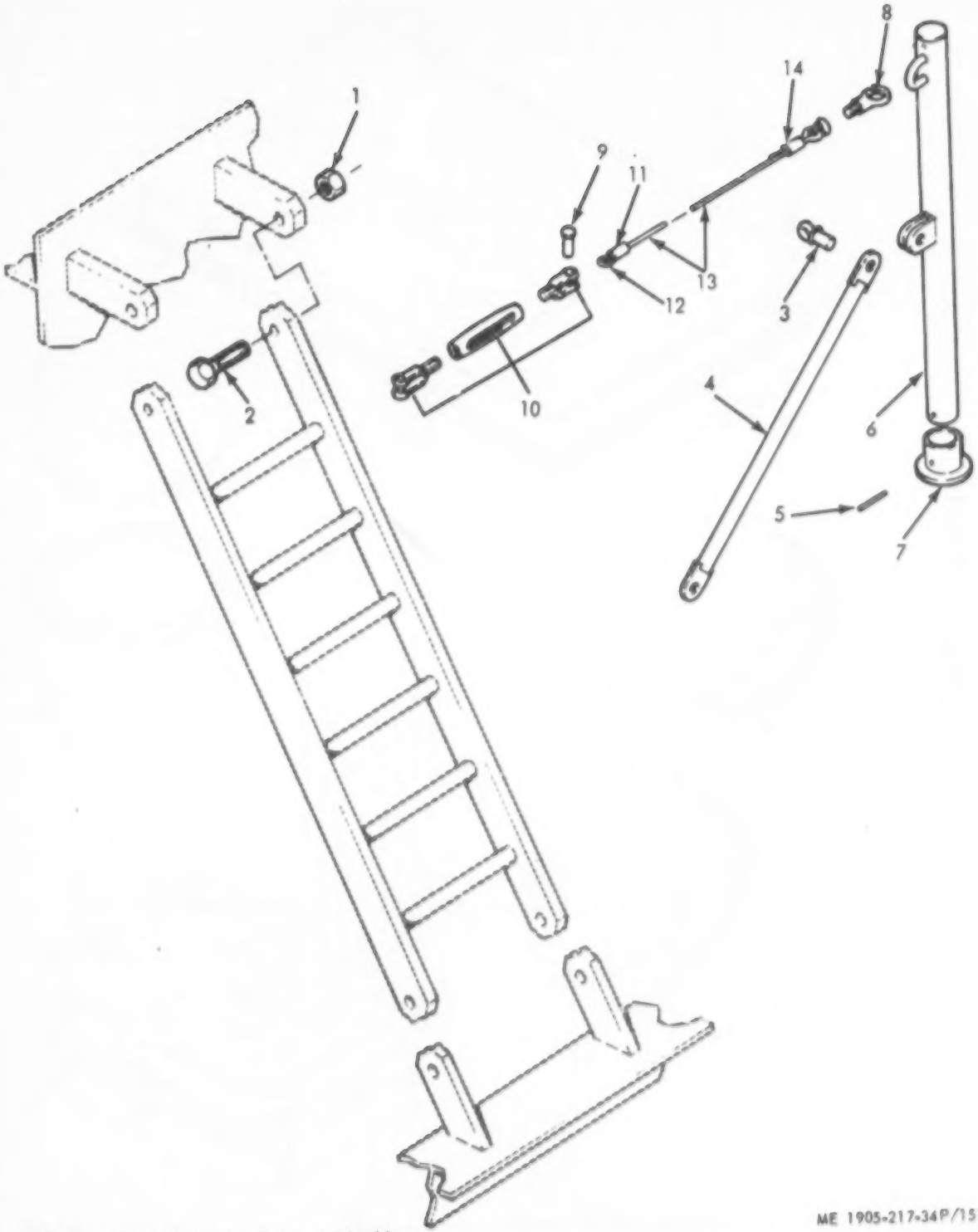

Figure 157. Life Lines, Bitts, and Ladders

ME 1905-217-34P/157

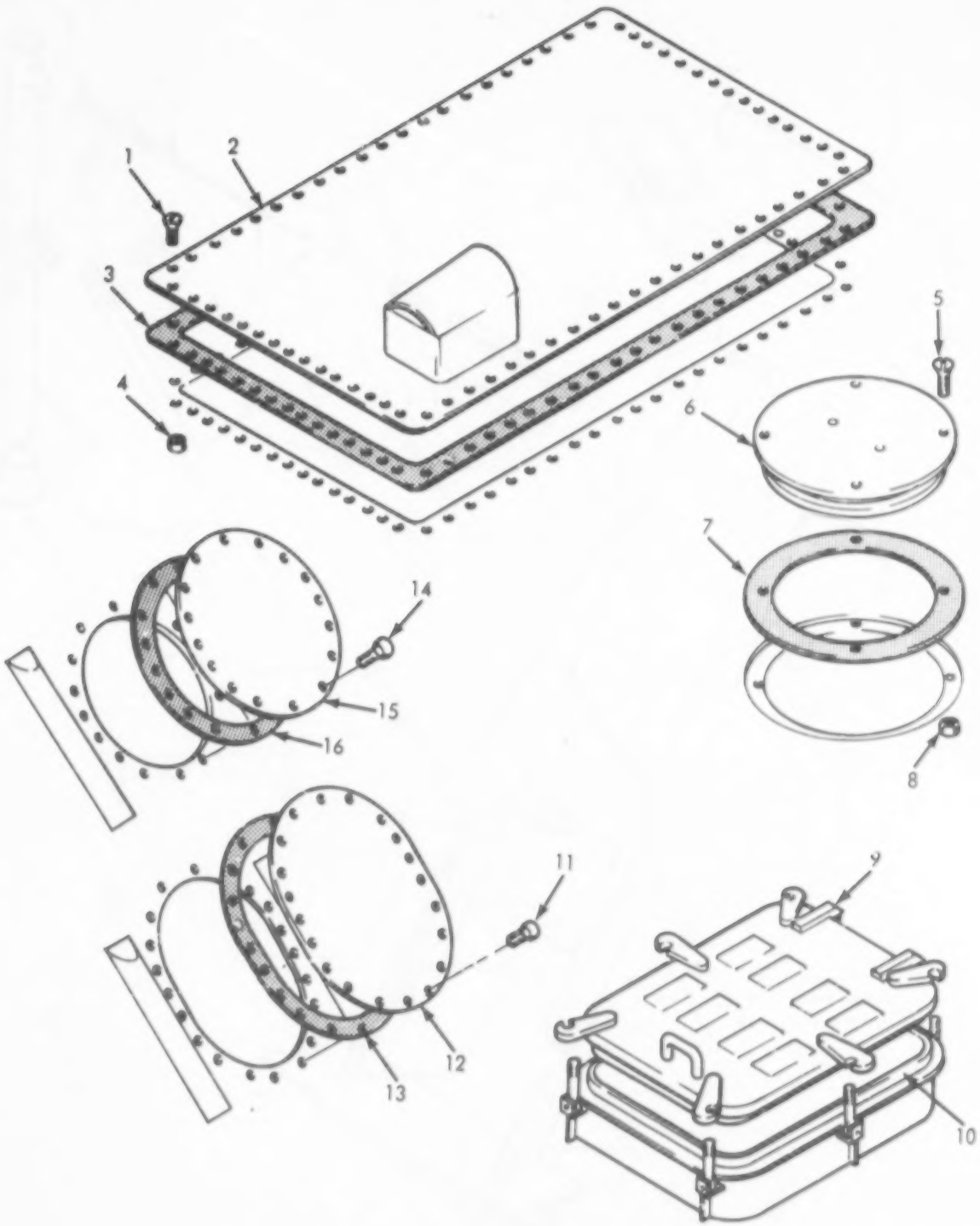

Figure 158. Miscellaneous Hull Components

ME 1905-217-34P/158

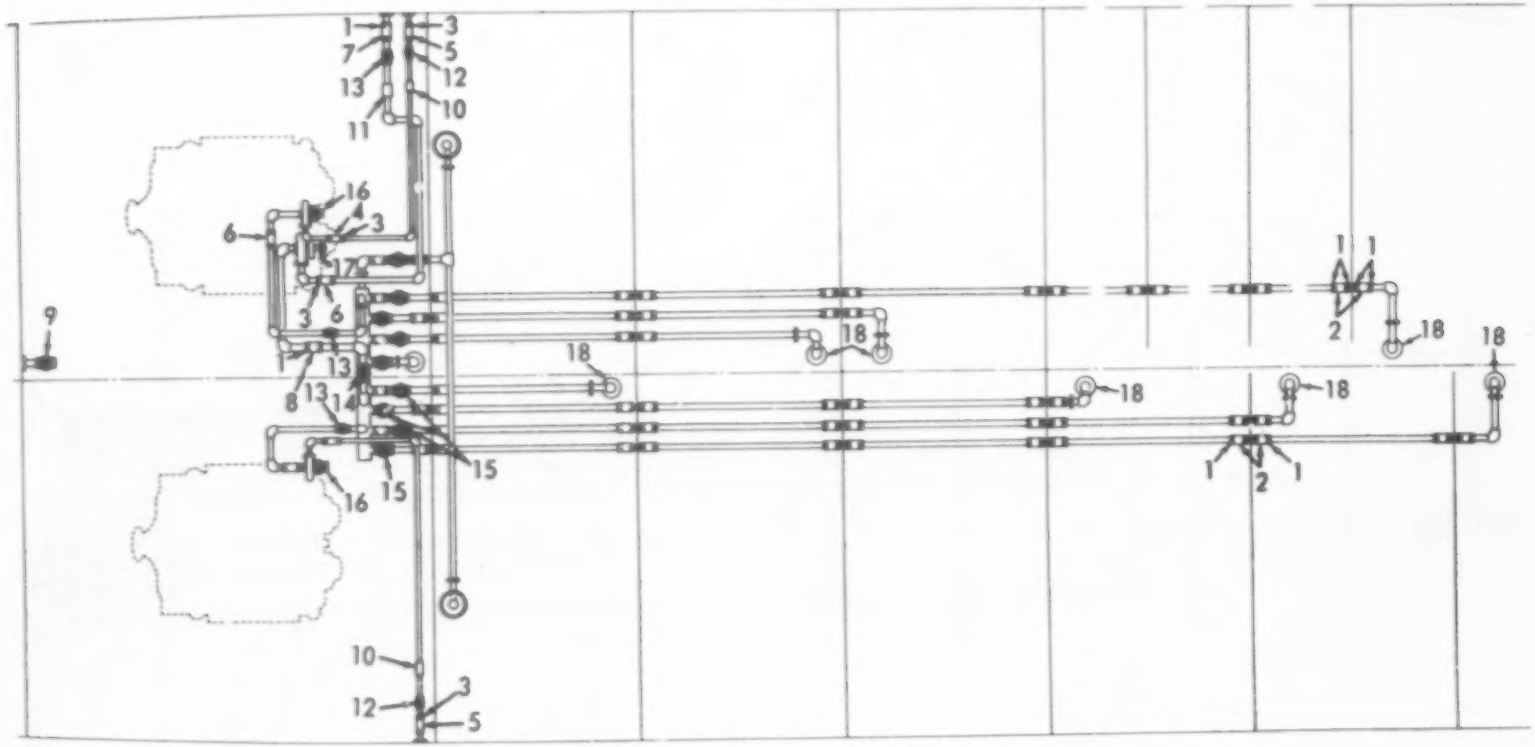

Figure 159. Piping, Bilge

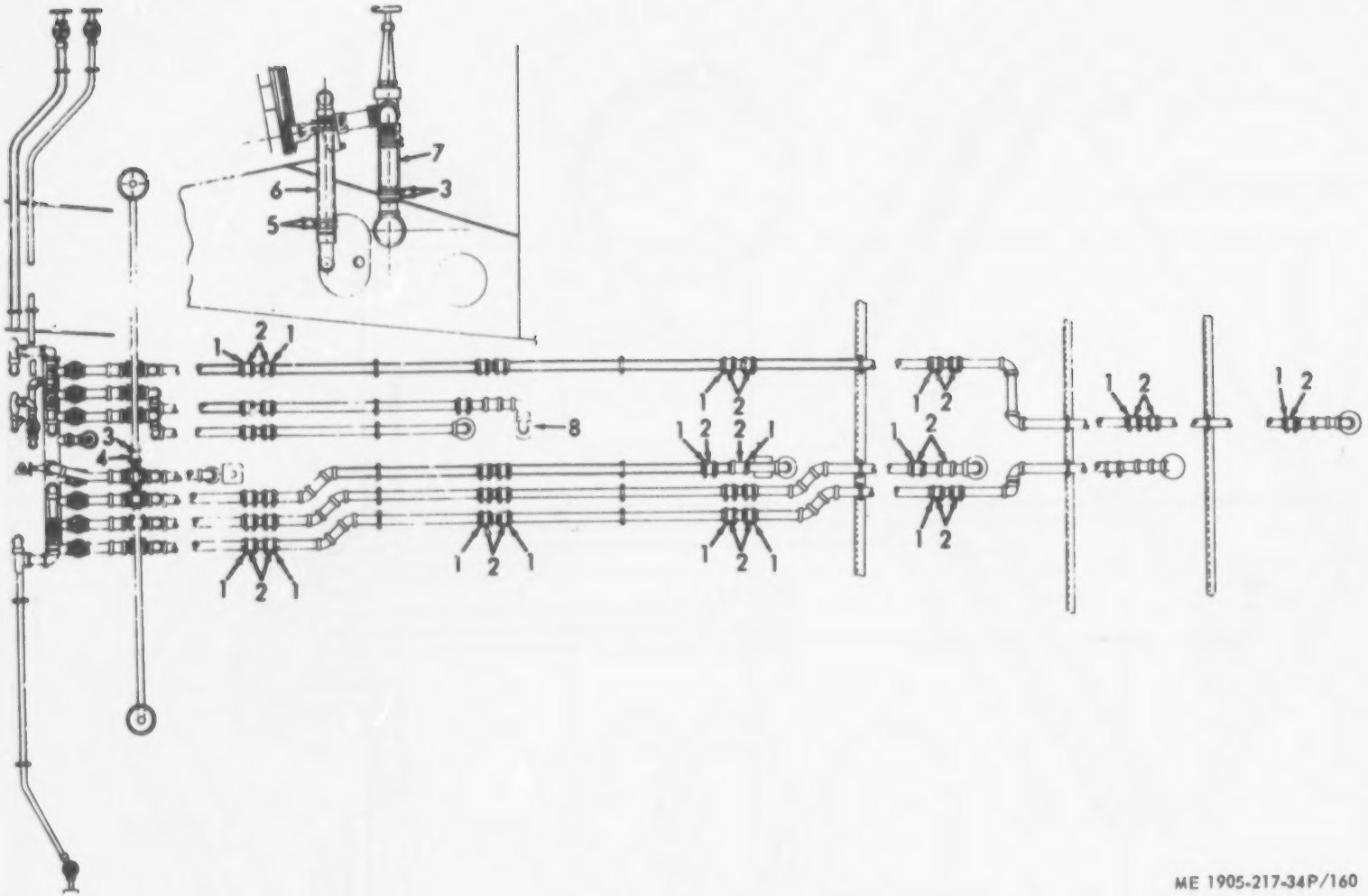

Figure 160. Piping, Bilge

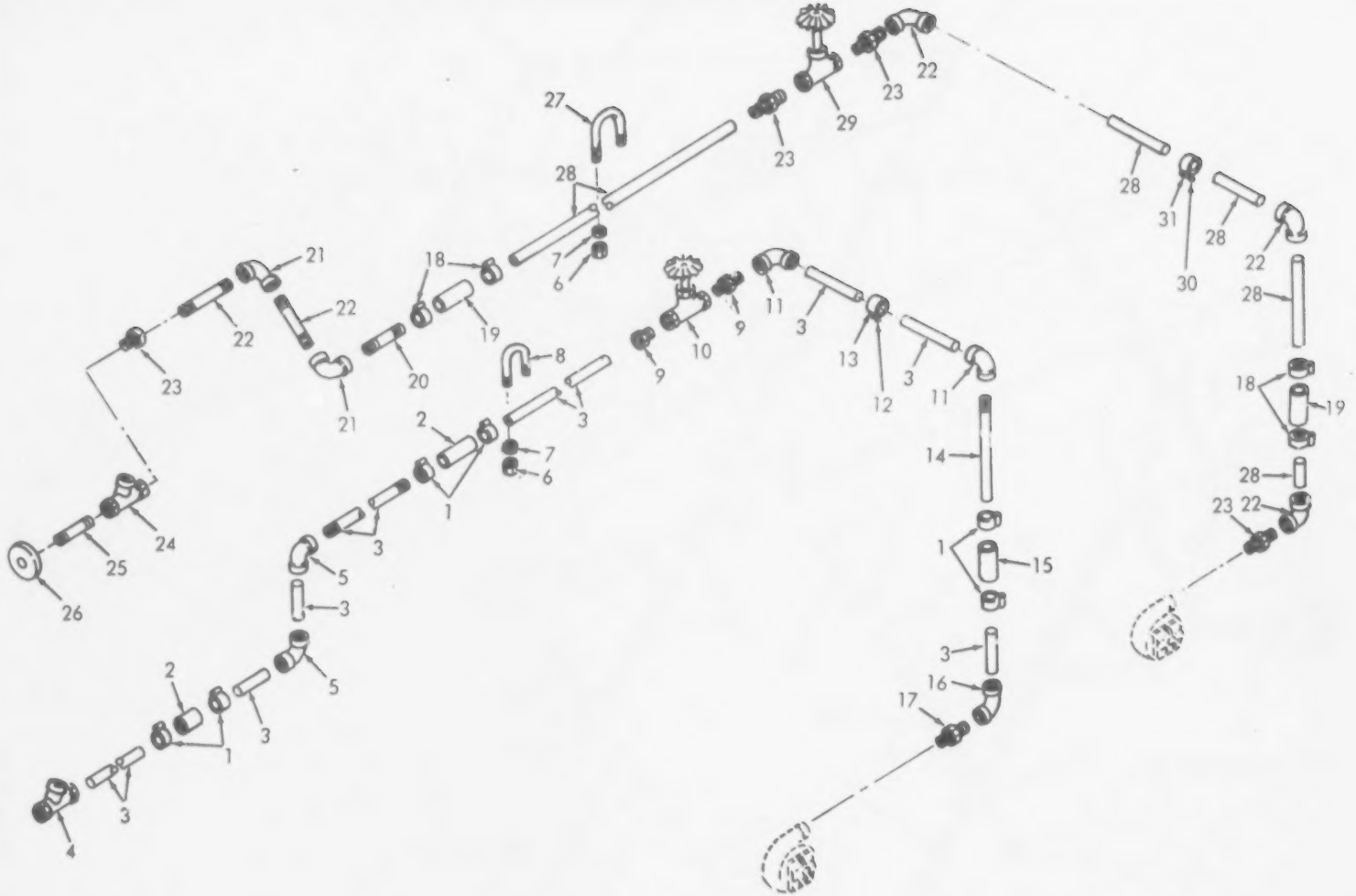

Figure 161. Piping, Bilge

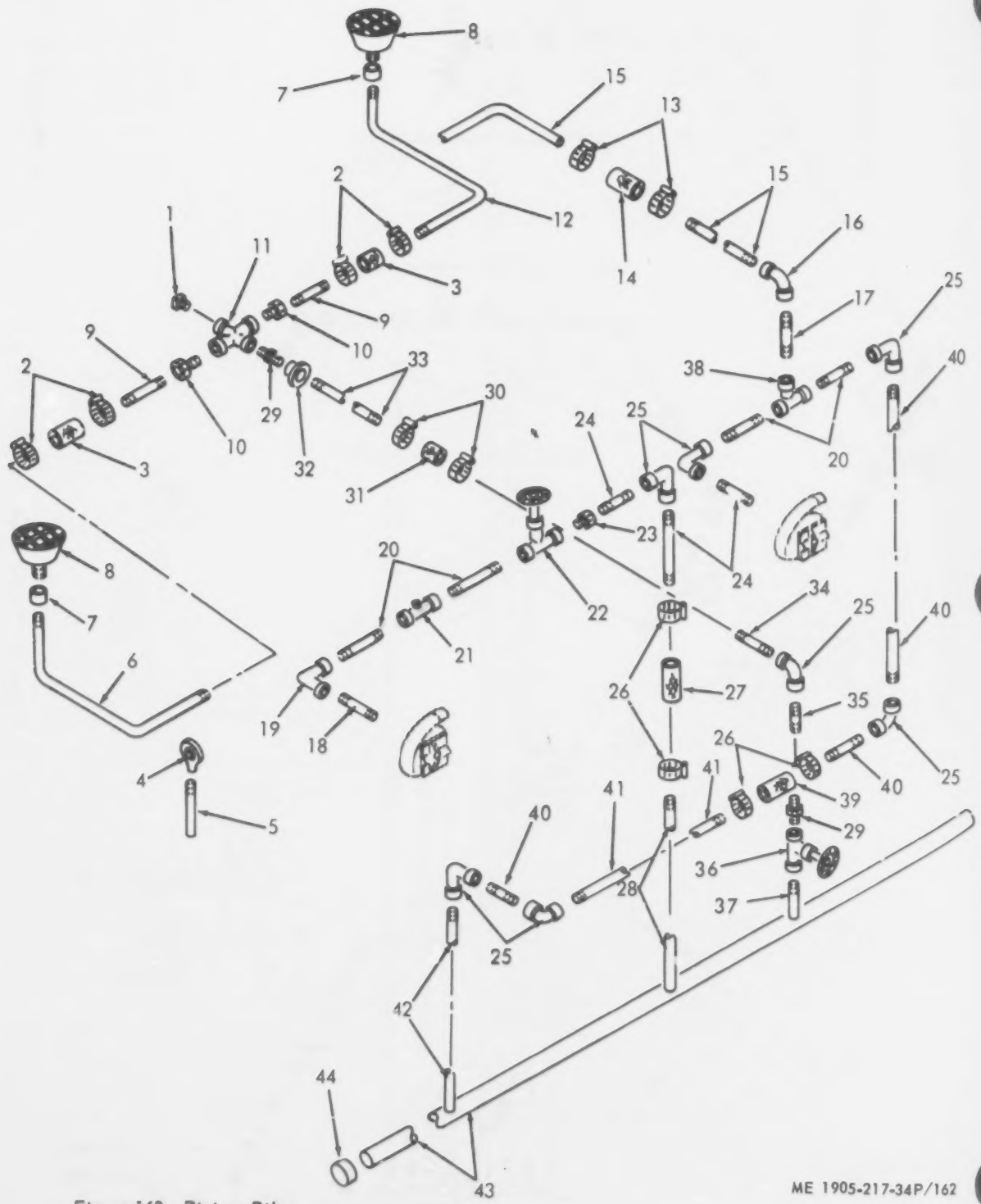

Figure 162. Piping, Bilge

ME 1905-217-34P/162

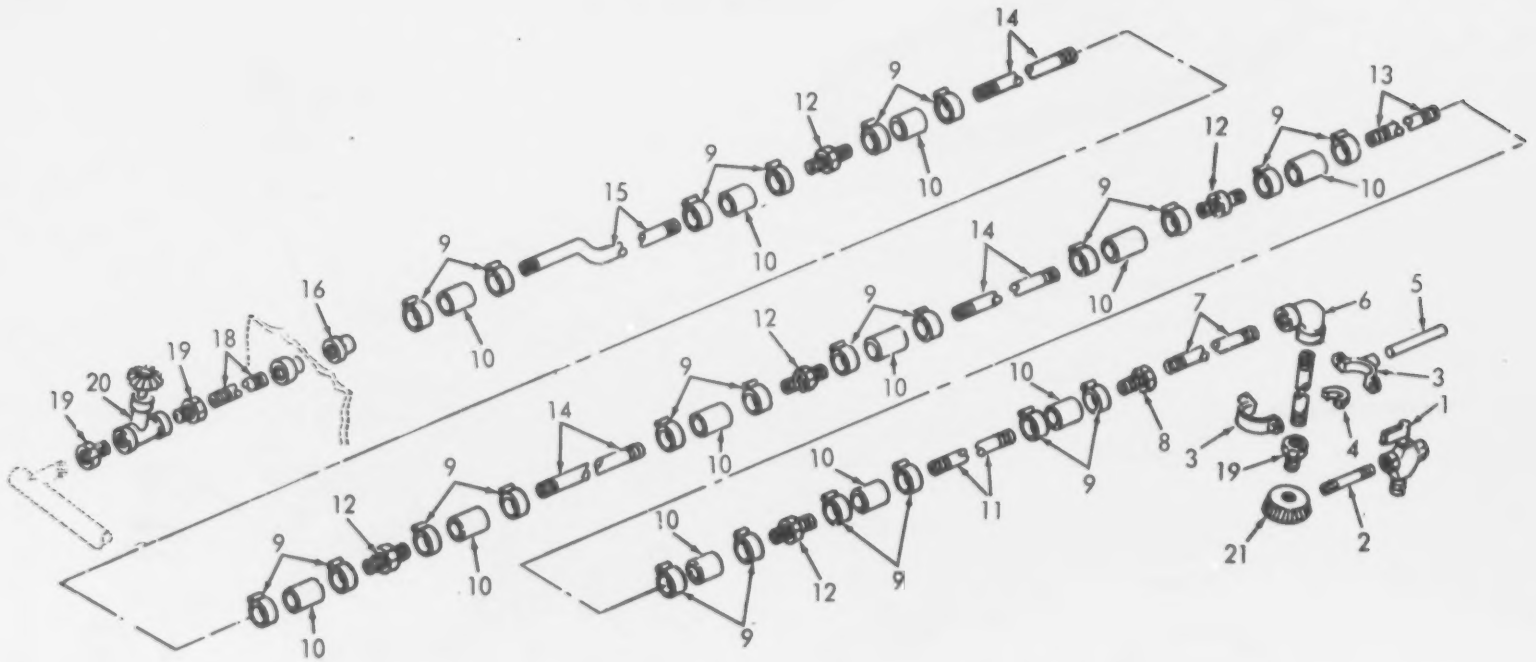

Figure 163. Piping, Bilge

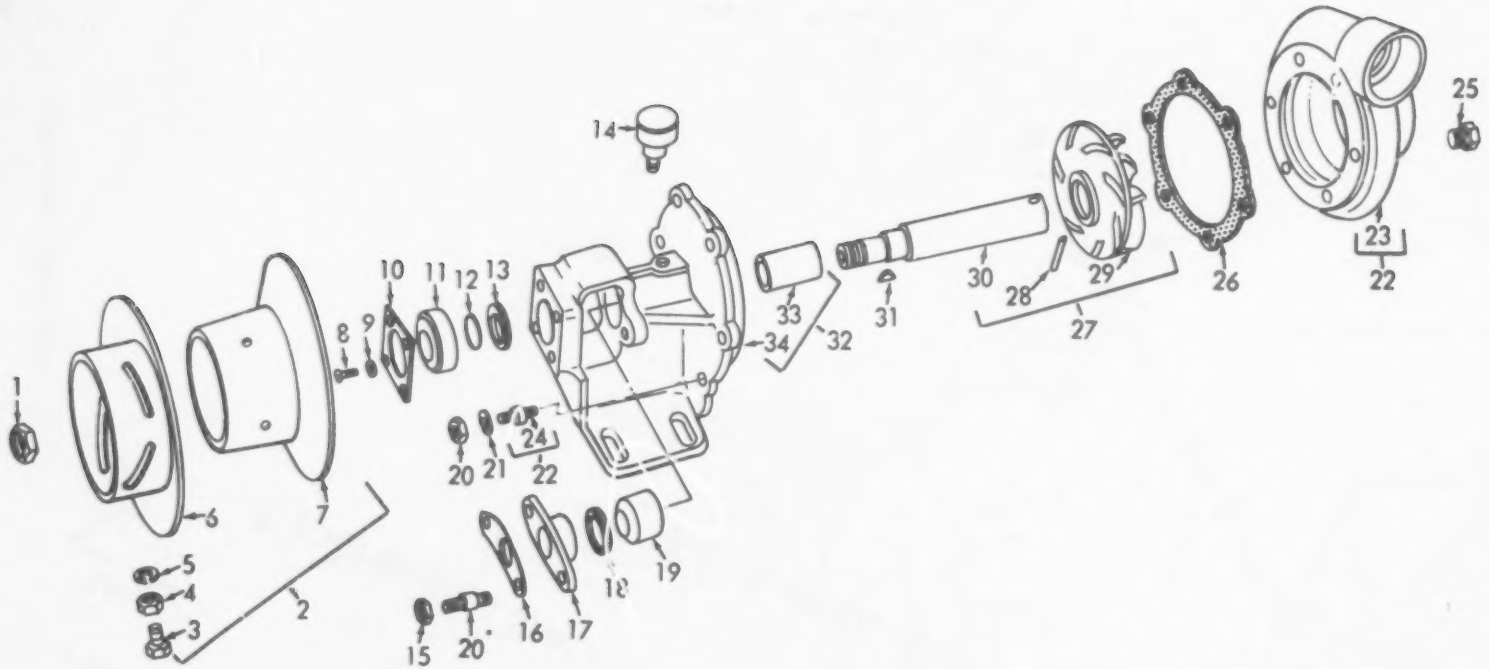

Figure 164. Pump, Bilge

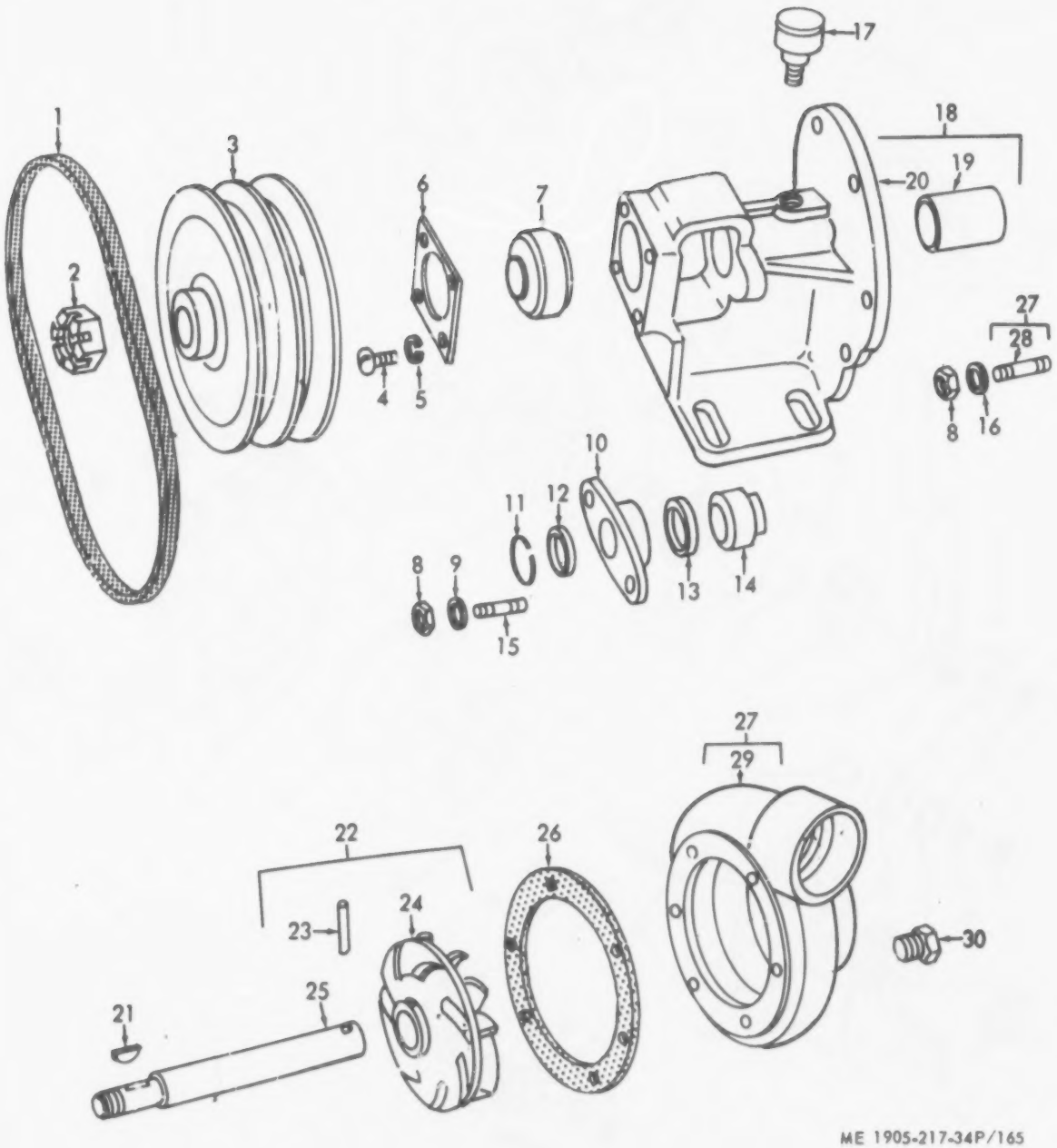

Figure 165. Pump, Bilge

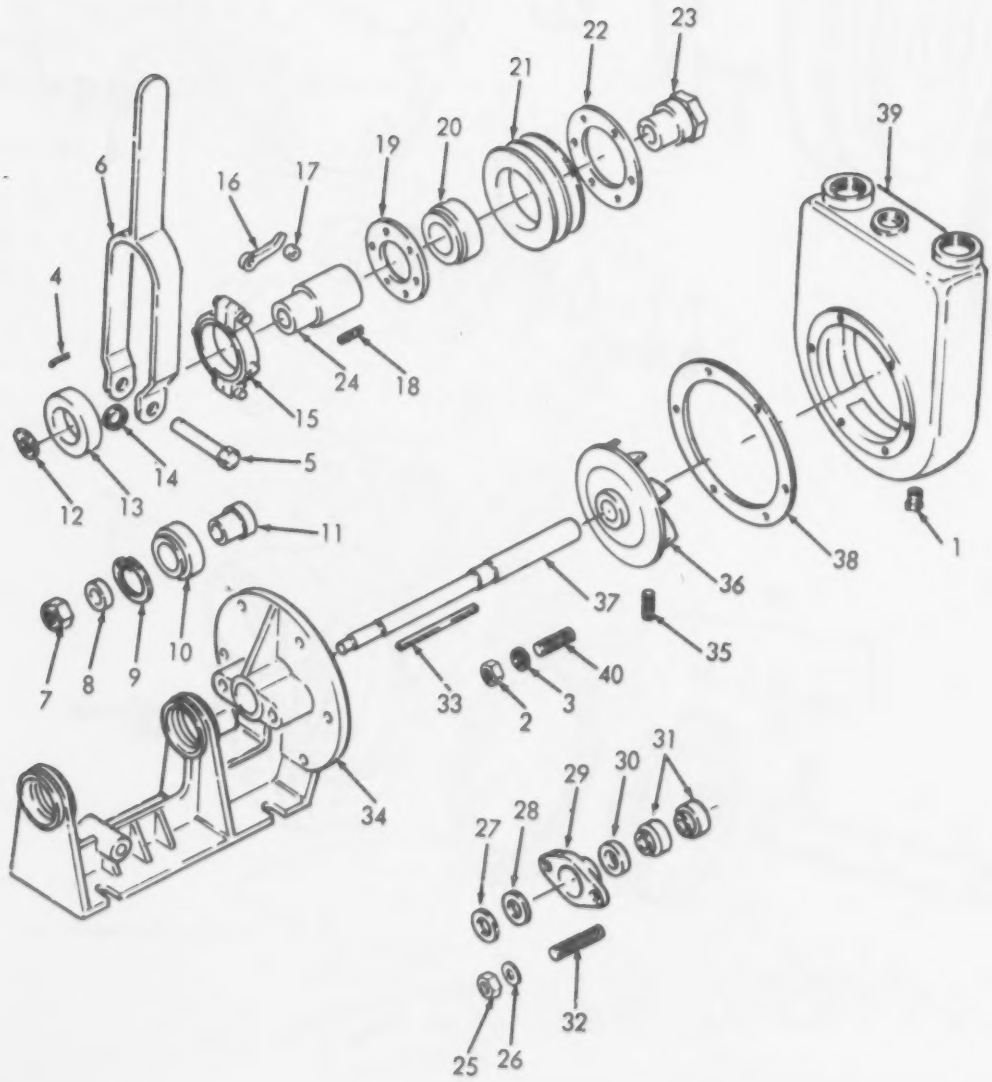

Figure 166. Pump, Bilge

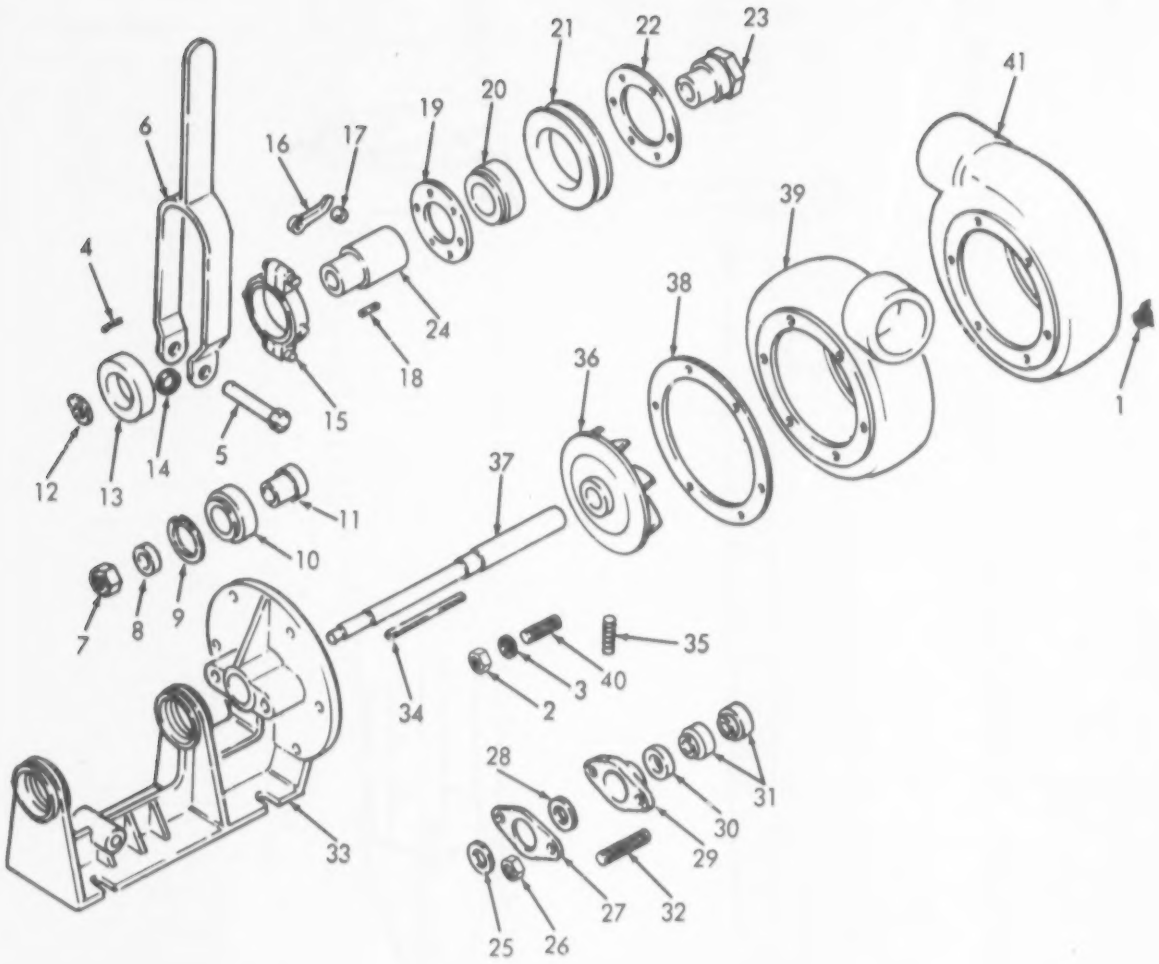

ME 1905-217-34P/167

Figure 167. Pump, Bilge

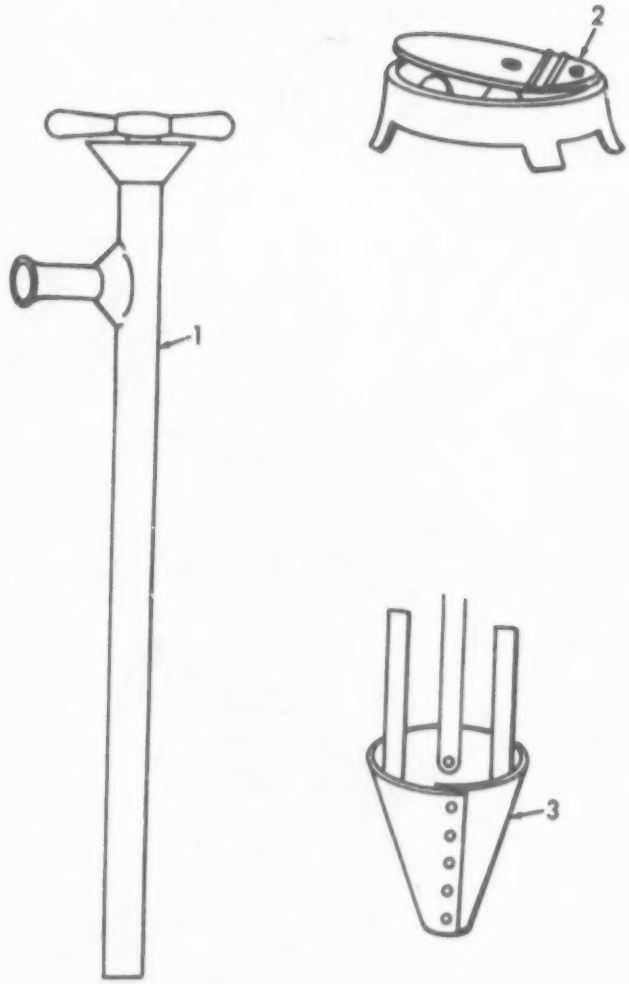

ME 1905-217-34P/168

Figure 168. Pump, Bilge Hand

Section V. INDEX-FEDERAL STOCK NUMBER AND REFERENCE NUMBER CROSS-REFERENCE TO FIGURE AND ITEM NUMBER

Stock Number	Figure No.	Item No.
1730-871-7422	146	5
2010-076-3737	150	14
2010-127-4756	150	13
2010-540-7689	150	4
2010-540-7690	150	4
2030-110-3447	138	
2030-113-9477	113	1
2030-113-9479	100	31
2030-115-0121	100	31
	101	19
2030-116-6664	113	
2030-155-2910	113	
2030-223-3233	117	4
2040-115-3703	30	5
2040-115-3705	30	
2040-367-1793	165	19
2040-826-6021	30	6
2520-891-1920	109	8
	140	4
2530-019-7502	105	4
2540-881-0467	156	3
2590-089-4449	140	5
2590-389-4450	109	3
	140	14
2590-089-4451	109	11
	140	6
2815-019-4682	2	17
2815-214-3760	27	36
2815-288-3642	4	1
2815-318-9636	61	39
2815-347-1932	14	1
2815-363-7980	13	6
2815-363-8177	38	10
2815-363-8334	63	17
2815-389-6060	150	9
2815-416-4168	42	32
2815-421-1473	3	
2815-527-2312	5	29
2815-572-2103	61	38
	63	5
2815-587-3399	42	
2815-587-3400	42	
2815-589-1433	16	5
2815-605-4544	41	5
2815-621-3932	33	
2815-785-5230	42	28
2815-793-6786	28	
2815-815-2938	42	24
	42	26
2815-898-4228	1	6
2815-898-4468	27	35
2815-901-0977	36	1
2815-902-1882	5	6
2815-906-1591	59	
2815-922-2027	4	10
2815-947-4290	4	11
2815-981-1529	2	13
2910-076-9751	94	4
2910-110-9508	33	
2910-110-9509	33	
2910-110-9510	33	
2910-115-3694	33	
2910-235-4313	8	
2910-287-1912	4	8
2910-399-5550	15	
2910-420-8919	7	15
2910-421-1539	7	
2910-421-1540	7	12
2910-424-7431	7	7
	8	7
2910-459-6696	10	23
2910-477-6802	11	1
2910-524-7862	13	3
2910-588-8440	4	4
2910-590-1709	6	21
2910-620-7460	15	3
2910-646-9727	94	1
2910-808-2655	13	
2910-932-4813	27	33
	28	34
2910-937-6573	13	
2920-115-0133	52	3
2920-115-0134	52	3
2920-133-3295	46	32
2920-276-9263	48	
2920-398-9830	48	36
2920-477-6103	46	
2920-477-6107	46	30
2920-640-7462	48	
2920-652-7998	47	36
2920-777-3392	47	
2930-015-3071	5	3
2930-025-6743	26	
2930-097-2479	26	12
2930-313-6445	26	12
2930-363-8226	2	18
2930-377-2472	5	19
	38	13
2930-379-4295	5	
2930-461-3898	27	
2930-462-8114	18	26
2930-565-5758	5	30
2930-590-1716	18	3
2930-672-6758	107	7
2930-767-0528	28	
2930-786-6193	18	27
2940-019-8087	36	11
2940-328-8458	8	16
2940-499-1689	9	9
2940-580-6238	3	11
2940-792-2711	37	6
2940-792-2712	37	1
2940-810-5686	59	3
	60	3
2940-836-8263	3	1
2940-897-2641	59	2
	60	2
2940-944-6249	3	17
	36	17
2940-977-0902	108	9
2990-005-7652	60	
2990-115-0137	52	
2990-165-9556	25	8
2990-165-9559	25	8
2990-223-3291	25	8
2990-223-3300	25	8
2990-333-4862	33	
2990-363-7395	1	3
2990-437-0759	24	5
2990-437-0759	24	5
2990-457-0162	115	5
2990-623-9924	41	
2990-629-9713	55	
2990-658-8232	55	15
2990-844-2379	52	
2990-897-2612	115	4
2990-919-6564	94	3
3020-517-3167	42	31
	42	34
3020-541-1591	107	9
3020-837-8672	157	14
3030-460-2502	165	1
3030-528-4616	159	16
3030-528-4627	159	17
3030-529-0479	46	1
3030-580-9453	46	1
3040-922-0276	166	16
3040-922-0277	166	6
3050-528-4626	46	1
3110-100-6161	113	16
3110-156-3502	167	10
3110-156-3521	165	7
3110-156-3576	166	20
	167	20
3110-193-1632	166	10
3120-661-5787	164	33
3930-900-5161	109	17
3930-934-0501	109	9
	140	8
3930-940-0634	108	8
4010-228-9957	10	
	11	
4010-273-2914	157	
4010-812-0529	4	3

Stock Number	Figure No.	Item No.
4020-689-5688	97	
4030-286-5429	157	11
4030-805-5806	157	12
4140-422-0986	89	
4140-457-0603	88	
4310-591-2684	167	28
4320-03[illegible]-3868	164	26
4320-063-7471	164	27
4320-071-4982	167	
4320-073-1843	165	22
4320-078-2501	167	
4320-115-8802	105	
4320-115-8804	145	
4320-115-8805	125	
4320-115-8806	125	
4320-115-8807	124	
4320-115-8808	124	2
4320-115-8810	106	
4320-115-8811	106	
4320-116-9719	164	
4320-116-9720	165	
4320-168-0892	164	27
4320-168-0894	167	27
4320-218-2311	166	38
4320-235-1635	107	6
4320-235-1663	165	22
4320-244-9865	168	1
4320-251-2138	108	
4320-251-2139	159	18
4320-350-8725	56	
4320-363-7364	164	12
4320-367-1801	167	25
4320-389-9090	165	13
4320-391-9524	27	
4320-454-7875	165	
4320-462-2157	141	2
4320-557-9394	140	
4320-557-9395	43	6
4320-591-2679	43	6
4320-591-2684	165	12
4320-595-3333	166	28
4320-621-5248	164	13
4320-684-7192	164	
4320-689-3036	146	8
4320-689-3037	58	
4320-805-0159	43	4
4320-864-6236	43	4
4320-922-0194	146	2
4320-922-0195	56	
4320-922-0196	166	
4320-922-0197	166	
4320-922-0198	166	32
4320-922-0199	166	19
4320-922-0204	166	5
4320-922-0226	167	
4320-922-0227	167	
4320-936-3985	159	
4320-937-0986	159	
4320-937-1115	167	
4320-937-1136	166	
4330-004-0748	166	
4330-028-3885	166	17
4330-088-2056	140	
4330-415-1622	9	
4330-454-8112	109	10
4330-456-1372	8	13
4330-536-2401	140	11
4330-708-9544	141	
4330-786-1741	6	4
4710-004-2267	8	
4710-006-1647	7	13
4710-277-4534	23	20
4710-277-4613	163	
4710-277-5452	11	
4710-277-5475	20	
4710-277-5528	161	
4710-277-6068	23	
4710-277-6069	162	
	21	
	12	
	23	
	20	

Stock Number	Figure No.	Item No.
4710-277-6069	23	
4710-277-6099	20	
4710-277-6191	23	
	162	
4710-277-6127	23	
4710-277-7736	22	19
4710-277-7748	11	
4710-277-8703	163	
4710-278-2218	21	
4710-278-2219	22	
4710-278-2221	21	
4710-278-2222	21	
	161	
	162	
	162	
4710-278-2223	162	
	162	
	162	
	163	
	163	
4710-278-8772	20	
	21	
4710-289-2851	23	
	162	
4710-289-2854	21	
	22	
	23	
4710-289-5945	22	
4710-640-1100	22	
4710-640-1104	22	
4710-684-3565	22	
4710-822-9538	162	
4710-839-9408	21	
4710-846-1003	161	
	161	
	162	
	162	
4710-978-7010	51	
	51	
	51	
4720-052-4959	118	
4720-097-3612	109	
	118	
4720-067-0454	10	
	49	
	49	
	101	1
	102	
	103	
	103	
	104	
4720-106-6992	11	
4720-189-2779	20	
4720-189-9730	2	9
4720-197-1594	24	2
4720-230-6526	21	
	22	
	23	
	162	
4720-235-4120	20	
4720-235-4121	19	
	20	
	20	
	21	
	22	
	23	
	32	
	159	
4720-235-4122	19	
	21	
	161	
	162	
4720-235-4126	23	
	159	
	160	
4720-235-4127	21	
	159	
	161	
	162	
4720-235-4134	19	
4720-277-5026	5	
4720-277-9026	38	

Section V. INDEX-FEDERAL STOCK NUMBER AND REFERENCE NUMBER CROSS-REFERENCE TO FIGURE AND ITEM NUMBER

Stock Number	Figure No.	Item No.
4720-278-5051	18	2
	18	5
4720-287-4837	159	
	161	
	162	
	163	
4720-288-7996	23	
4720-288-9756	10	
	20	
	159	
	160	
4720-288-9761	150	
4720-288-9770	2	
	29	3
4720-288-9910	22	
	23	
4720-289-2615	49	
	49	
	50	
4720-289-6060	118	
4720-298-9910	21	
4720-407-6550	101	3
4720-420-7723	102	
4720-426-2935	10	4
4720-436-2937	10	5
4720-454-4933	160	
4720-457-6345	24	6
4720-459-2784	118	
4720-459-2787	118	
4720-541-8859	49	
4720-555-8015	22	
4720-597-9635	64	
4720-595-1820	150	
4720-639-4907	50	
4720-788-5956	3	
4720-837-1466	160	
4720-879-0776	51	32
4720-922-5136	102	
	103	
4720-930-4515	51	
4720-949-0457	11	
4730-004-0732	102	3
	102	28
	103	16
4730-011-8831	47	
	48	
4730-014-2435	10	2
4730-014-3343	18	11
4730-019-4727	29	4
4730-021-1602	100	8
4730-028-3890	8	3
	9	4
4730-044-4692	36	18
4730-044-4867	2	16
4730-049-8126	155	3
4730-050-4208	17	7
	45	8
4730-057-8113	11	19
4730-088-4550	141	3
4730-097-9771	141	5
4730-134-4222	162	30
	163	9
4730-168-2107	25	10
4730-172-0040	148	3
4730-172-0049	80	16
4730-187-4191	7	8
4730-187-4207	3	18
4730-187-4227	21	39
4730-187-4241	5	
4730-187-7598	103	39
4730-193-0875	29	7
4730-193-2715	11	24
4730-193-7080	103	41
4730-194-0219	11	11
4730-196-2002	11	14
	12	2
4730-196-2058	103	42
4730-197-1595	150	5
4730-222-1844	23	36
4730-231-3016	100	11
4730-250-7953	161	21
4730-253-4413	71	4
4730-253-4414	71	2
4730-254-6238	11	28
	12	5
4730-254-6241	21	61
4730-263-5266	102	10
	103	15
	104	3
4730-273-6041	3	
4730-274-6285	29	5
4730-277-7611	33	
4730-277-7739	21	
4730-277-8182	18	6
4730-277-8643	33	
4730-277-8768	13	5
4730-278-2962	6	22
4730-278-3001	165	30
	166	1
4730-278-3559	103	4
4730-278-3561	103	18
4730-287-2889	164	25
	167	1
4730-288-9927	11	26
4730-289-2615	50	
4730-289-5176	29	10
	71	1
4730-289-5484	100	28
4730-319-5878	51	
4730-334-7839	3	
4730-352-9414	115	6
4730-374-6960	51	
4730-384-0275	11	21
4730-389-6066	64	
4730-457-8343	141	
4730-490-4006	102	18
	103	12
4730-497-1709	11	29
4730-499-3597	2	8
4730-522-2252	33	
4730-540-2612	33	
4730-540-4027	105	3
4730-542-5598	102	20
	104	11
4730-555-1764	103	36
4730-595-0792	4	5
4730-618-7057	101	12
	103	38
4730-628-4815	100	26
4730-628-4816	100	10
	100	27
4730-682-7088	118	
4730-722-3591	162	29
	163	19
4730-764-1661	103	25
4730-764-3046	104	14
4730-770-0029	79	1
4730-781-4996	104	1
4730-784-1879	100	12
4730-785-3863	5	13
4730-789-3082	101	5
4730-794-6797	161	9
	162	7
4730-801-1144	102	2
4730-802-2815	118	41
4730-802-8876	104	15
4730-815-3439	100	20
4730-818-5197	161	16
4730-834-4521	100	19
4730-845-4100	162	23
4730-865-9251	100	15
4730-879-5398	10	
	104	8
4730-879-8363	140	1
4730-879-8370	132	4
4730-886-5967	3	14
4730-888-6933	10	14
4730-903-1341	23	21
4730-908-3193	11	12
	20	32
	21	1
	22	1
	22	5
	23	5

Section V. INDEX-FEDERAL STOCK NUMBER AND REFERENCE NUMBER CROSS-REFERENCE TO FIGURE AND ITEM NUMBER

Stock Number	Figure No.	Item No.
4730-908-3193	161	18
	162	2
	162	13
	162	26
4730-908-3194	2	
	19	6
	20	14
	23	1
	23	14
	29	1
4730-908-6274	118	11
4730-908-6292	5	1
	5	8
	11	5
	19	1
	20	49
	20	62
	21	9
	21	13
	22	7
	23	26
	29	8
	38	1
	159	1
	160	5
4730-908-6293	10	18
	20	5
	160	1
4730-908-6294	24	1
	25	9
4730-909-8627	18	1
	18	4
	19	3
	21	3
	159	3
	160	3
	161	1
4730-911-5342	100	29
4730-913-7406	51	
4730-939-6247	11	20
4730-943-0458	162	16
4730-945-5393	103	46
4730-975-1879	23	
4730-987-3620	64	
4730-999-8582	102	17
	103	7
	104	6
4810-757-7197	53	
4820-005-4893	23	37
4820-075-1862	49	22
4820-227-0169	49	19
4820-241-4427	50	46
4820-241-4428	109	1
4820-241-4431	49	20
4820-248-3701	100	30
	123	2
4820-276-9041	26	7
4820-287-2302	20	26
4820-287-3098	161	4
4820-322-8566	49	21
4820-366-8299	3	10
	36	10
4820-462-2164	102	5
4820-462-7807	50	47
4820-483-0682	20	71
4820-554-8391	22	10
	23	32
	161	12
	161	30
4820-555-9761	159	9
4820-607-1705	142	
4820-752-9040	18	12
	27	4
4820-785-5228	42	27
4820-822-0631	162	22
4820-845-0274	51	52
4820-845-1096	2	10
4820-849-1220	5	14
	6	1
	18	13
4820-899-5730	162	36
	163	20
4820-959-7298	10	13
5207-206-4044	166	32
5305-004-1590	56	47
5305-005-0836	30	8
5305-005-0837	48	25
5305-005-0838	153	7
5305-012-0233	27	1
5305-021-3896	25	6
5305-044-4153	55	1
5305-045-1988	27	27
	28	1
5305-053-8993	27	29
	28	3
5305-059-8382	152	9
5305-068-0505	48	
5305-068-0508	33	1
	33	7
5305-068-0511	5	
	36	
	64	
5305-071-1767	7	22
	55	6
5305-152-0550	109	6
	140	9
5305-175-5104	46	35
5305-175-5107	46	28
5305-206-2511	152	5
5305-206-6229	33	1
5305-206-6786	1	1
5305-207-2240	106	2
5305-225-3840	40	1
5305-225-3843	6	14
	33	
	33	7
5305-225-8501	4	13
5305-225-8502	18	14
	38	7
5305-225-8510	3	19
5305-235-2479	113	15
5305-253-5614	110	6
	111	11
5305-267-8975	40	6
5305-269-2804	7	
5305-269-2805	6	26
5305-269-3208	18	7
5305-269-3210	3	23
	63	13
5305-269-3211	5	4
	7	
	38	3
	42	4
	43	1
5305-269-3214	23	44
5305-269-3216	5	10
	15	1
5305-269-3217	5	21
5305-269-3223	4	7
5305-272-2080	16	22
5305-273-5630	76	23
5305-276-8457	105	19
	106	1
5305-363-3582	47	20
	48	20
5305-363-8091	14	5
5305-367-1806	165	4
5305-371-5138	47	
	48	
5305-451-3487	125	1
5305-456-7198	108	4
5305-543-2419	18	18
	36	
5305-543-2753	48	18
5305-591-2690	165	15
5305-591-2692	164	3
5305-614-0247	48	
5305-614-0274	4	18
5305-622-9483	33	17
5305-637-9257	78	3
5305-639-8375	95	1
5305-644-7389	25	11
	158	11
	158	14

Section V. INDEX-FEDERAL STOCK NUMBER AND REFERENCE NUMBER CROSS-REFERENCE TO FIGURE AND ITEM NUMBER

Stock Number	Figure No.	Item No.
5305-688-2111	17	1
	17	18
	17	41
	45	
5305-701-5071	156	5
5305-701-5074	156	4
5305-701-5118	158	5
5305-702-4523	117	5
5305-717-5467	25	3
5305-723-6384	107	5
5305-725-2317	45	1
5305-804-8055	158	1
5305-889-3002	47	12
5305-954-8152	152	6
5305-954-8154	152	11
5305-984-6191	48	12
5305-988-1721	6	2
	45	4
5306-003-0684	23	31
5306-009-3895	156	23
5306-013-7902	36	
5306-018-9691	71	9
5306-021-2545	42	2
5306-143-2710	107	8
5306-207-8116	17	10
5306-225-8494	1	4
5306-225-8500	26	3
5306-226-4829	37	2
5306-226-4844	5	15
5306-299-2367	107	1
5306-424-7069	107	3
5306-437-4475	150	8
5306-558-8187	16	6
5306-579-1819	107	2
5306-613-5396	13	1
	26	1
	33	5
5306-637-9623	48	
5306-638-4963	27	34
5306-672-1924	161	8
5306-870-6222	3	2
5306-937-1312	161	27
5306-959-7818	157	2
5306-989-0830	28	9
5307-003-0789	167	32
5307-206-1459	164	24
	167	40
5307-248-7333	164	20
5307-363-8059	14	6
5307-367-1809	165	28
	166	40
5307-416-4024	21	30
5307-741-1745	23	41
5307-765-4215	36	2
5307-886-3438	2	15
5307-982-8935	84	16
5310-004-5138	56	46
5310-012-3197	2	11
5310-012-6189	33	
5310-045-3296	47	19
	48	19
5310-045-3299	48	13
5310-071-3234	140	16
5310-071-3235	109	5
	140	12
5310-080-4004	43	3
5310-081-4219	4	15
5310-126-5236	108	2
5310-136-9712	36	3
	45	7
5310-141-3669	2	
5310-151-8837	109	7
	140	3
5310-151-8839	140	12
5310-167-0803	156	22
5310-167-0809	156	11
5310-168-6360	46	42
5310-168-6371	46	31
5310-168-6388	46	41
5310-169-6456	46	45
5310-193-9753	5	23
5310-209-0965	27	28
5310-209-0965	28	2
5310-261-7340	48	
5310-262-3105	33	25
5310-262-3608	165	9
	166	26
5310-262-5429	16	4
	33	15
5310-264-1390	152	4
5310-276-3015	15	2
5310-297-8836	48	
5310-367-1799	165	8
	166	
5310-367-1812	166	2
	164	5
	165	5
5310-407-9566	1	5
	2	
	2	12
	3	20
	4	14
	5	16
	17	27
	18	15
	26	4
	33	
	38	8
	41	2
5310-438-3690	150	3
5310-438-3691	150	2
5310-438-3693	150	7
5310-456-7172	46	43
5310-499-6148	54	9
5310-515-9627	33	
5310-558-6882	165	16
	166	3
	166	14
	167	14
5310-582-5965	26	9
	33	
	33	8
	33	18
	37	3
	40	2
	40	5
	55	13
	161	7
5310-582-9565	33	2
5310-584-5272	7	23
	27	30
	28	4
	55	2
	55	7
5310-588-8490	6	4
5310-591-2694	164	21
	167	3
5310-591-2695	167	26
5310-591-2696	164	20
	167	2
5310-595-6852	55	4
5310-614-3504	25	7
	25	12
5310-625-5756	97	14
5310-637-9541	1	2
	3	24
	4	8
	5	5
	5	11
	5	22
	6	25
	7	
	17	2
	17	19
	17	42
	18	8
	18	19
	27	2
	28	10
	29	12
	36	
	36	
	38	4
	42	3

best copy available

Section V. INDEX-FEDERAL STOCK NUMBER AND REFERENCE NUMBER CROSS-REFERENCE TO FIGURE AND ITEM NUMBER

Stock Number	Figure No.	Item No.
5310-637-9541	42	5
	43	2
	48	
	55	10
	63	14
	64	
5310-655-9938	158	8
5310-660-2649	7	2
	8	2
	9	3
5310-732-0559	5	
	6	24
	7	
	29	11
	33	
	42	1
	55	9
5310-734-1739	148	1
5310-734-8905	48	
5310-734-8923	48	
5310-761-6882	161	6
5310-768-0318	23	38
5310-768-0319	26	8
	40	4
5310-768-0321	25	4
	156	20
	158	4
5310-809-4058	48	
5310-819-2985	152	3
5310-820-6653	52	2
5310-833-3564	93	23
5310-843-3496	109	4
	140	11
5310-853-9335	7	17
5310-880-5977	139	31
5310-880-7746	16	7
	17	26
5310-886-3069	139	38
5310-891-1751	78	1
5310-913-8881	25	1
5310-924-5897	156	10
5310-926-5880	156	21
5310-929-6395	6	15
5310-933-8778	25	5
5310-934-9727	156	9
5310-982-4945	157	1
5310-984-7042	25	2
5310-989-5956	23	30
5315-221-7229	164	28
	167	35
5315-234-1863	156	7
5315-236-8359	97	13
5315-243-1167	150	1
5315-251-9989	16	2
5315-363-8099	33	11
5315-367-1802	165	23
	156	35
5315-591-2697	165	21
5315-597-5387	41	
5315-786-6197	14	3
5315-832-1840	148	4
5315-839-2325	16	1
5315-842-3044	139	30
5315-889-2702	150	1
5315-926-0119	166	18
5315-982-1344	97	15
5315-982-1349	97	4
5315-982-1350	97	8
5315-982-1869	139	32
5315-982-1914	157	3
	157	9
5315-982-1988	166	4
5315-982-7813	157	5
5325-461-5886	153	23
5330-034-3668	167	38
5330-079-2113	30	2
5330-097-3248	5	
	38	6
5330-141-7875	8	8
5330-171-9233	14	2
5330-185-5656	21	
5330-186-8039	150	

Stock Number	Figure No.	Item No.
5330-196-5060	150	
5330-202-1981	165	26
5330-222-2564	24	
	25	
	25	
5330-236-3718	159	
5330-250-5705	56	53
5330-261-5760	21	
	22	
	160	
5330-261-5761	10	
	10	
	11	
	95	
	118	
	154	
	158	
	158	
	158	
5330-285-3825	6	5
	6	12
5330-285-7384	7	5
	8	5
	9	6
5330-290-7860	3	12
5330-290-7911	23	
5330-291-3933	118	
5330-291-9288	9	11
5330-298-0504	18	17
5330-298-5706	2	14
5330-323-9156	7	19
5330-328-9857	8	15
5330-361-9569	9	5
5330-364-2674	7	11
5330-367-1801	166	30
5330-401-0864	56	50
5330-420-9635	6	20
5330-449-4483	33	
5330-456-7192	42	6
5330-458-2058	153	9
5330-458-2221	153	18
5330-491-1498	6	3
5330-505-6611	163	
5330-522-5340	8	12
5330-530-2527	4	2
5330-543-3205	10	
5330-591-2709	165	14
	166	31
5330-591-2710	164	19
	167	31
5330-599-4823	7	14
5330-599-5433	8	10
5330-602-4314	45	6
5330-604-8094	3	5
	36	5
5330-620-7359	28	33
	55	5
5330-620-9336	146	21
5330-627-4085	6	7
5330-629-6340	3	4
5330-641-0468	14	4
5330-657-7636	2	8
5330-663-7313	25	
5330-695-2157	43	5
5330-736-3508	3	15
	36	15
5330-762-6018	140	11
5330-774-4058	26	5
5330-785-1059	28	5
5330-786-5320	37	5
5330-837-4010	6	16
5330-839-4909	117	
5330-841-5964	36	8
5330-842-1900	5	12
5330-861-0526	139	42
5330-916-4304	167	30
5330-920-8463	140	10
5330-929-8730	30	4
5335-231-1203	11	
5340-005-5807	157	10
5340-014-2583	16	3
5340-262-4701	3	6

Section V. INDEX-FEDERAL STOCK NUMBER AND REFERENCE NUMBER CROSS-REFERENCE TO FIGURE AND ITEM NUMBER

Stock Number	Figure No.	Item No.
5340-282-1668	47	6
	48	6
5340-367-1808	165	11
	166	27
5340-801-8731	3	7
5340-888-8146	145	4
	146	1
5340-999-0317	33	
5360-236-3774	108	5
5360-443-6116	140	7
5360-734-8954	47	21
	48	21
5360-926-0118	166	12
5365-003-4145	167	9
5365-003-4160	167	11
5365-003-4161	166	11
5365-202-8946	8	9
5365-263-2710	42	33
5365-281-6660	33	14
5365-289-1578	5	27
5365-406-7793	108	6
5365-579-5683	3	3
5640-360-2495	24	7
5905-221-8094	153	14
5905-221-8095	153	22
5910-189-0577	156	
5920-280-3168	90	3
5920-686-9548	91	3
5930-258-5502	92	8
5930-503-1836	96	2
5930-522-1425	92	3
5930-539-7013	90	9
5930-548-7346	29	6
5930-574-2929	90	6
5930-589-5269	91	4
5930-615-9376	90	8
5930-636-2821	90	10
	91	6
5930-655-1575	93	22
5930-725-9991	90	4
5930-727-6904	96	2
5930-809-5770	91	5
5935-241-2538	92	7
5935-280-2390	92	1
5935-755-5851	92	6
5935-926-3078	92	2
5945-450-5161	54	11
5970-067-8407	46	47
5970-410-2545	46	36
5970-410-2546	46	27
5970-486-8421	47	11
	48	11
5970-496-5859	47	23
	48	23
5970-604-8321	47	
	48	
5975-682-0306	90	5
5977-116-7237	88	4
	89	4
5977-237-1596	47	14
	48	14
5977-685-6362	46	38
6115-010-2822	46	34
6135-120-1020	153	20
6145-260-8795	97	12
6210-225-9210	96	14
6210-399-7028	96	4
6210-686-4159	93	2
6210-944-1790	92	12
6220-028-3444	96	7
6220-028-3445	96	6
6220-054-2067	96	10
	96	12
6220-062-6647	96	11
6220-782-9404	96	8
6240-155-7790	96	5
6240-155-7836	93	3
6240-155-7926	93	7
6240-155-8725	96	13
	97	3
	97	11
6240-269-0566	96	9
6240-269-0966	156	17
6240-519-0853	96	15
6320-115-8795	153	25
6320-115-8796	153	13
6320-115-8797	153	6
6320-115-8798	153	3
6320-115-8799	153	
6320-115-8800	152	
6320-779-5923	152	8
6320-779-5924	152	12
6350-224-4945	96	16
6620-199-8730	93	14
6620-333-9253	41	
6620-377-3497	10	22
6620-494-9620	93	15
6620-570-6295	18	21
6625-404-3277	93	13
6625-404-3279	92	5
6625-832-8408	92	4
6625-983-5947	93	19
6680-019-4650	41	
6680-456-1583	93	9
6680-456-1585	41	5
6680-474-6501	41	
6680-573-5240	41	6
6680-692-3965	41	6
6685-045-3211	49	1
	50	1
6685-068-2699	108	1
	140	2
6685-087-6925	100	22
	118	45
6685-113-5440	93	11
6685-113-5441	93	12
8305-170-5385	158	
9330-559-2043	95	
9510-596-3564	97	
9520-596-1843	23	
9530-228-9231	11	
9530-233-1289	150	
9535-866-0295	158	

Reference No.	Mfr Code	Fig No.	Item No.
ACB32424	02064	156	23
AN912-8STD	81349	11	11
AN932U4	88044	6	22
AN960C1216	88044	156	11
AN960C516	88044	156	22
AS32	03925	119	
	03925	120	
A100	84276	117	4
A1000-6-6	98660	50	10
	98660	50	23
	98660	50	40
A1000-8-8	98660	50	16
A101	76122	164	32
A1100-4-4	98660	50	44
A11214	41967	161	9
	41967	162	7
A11457	41947	22	20
A1277	41947	22	31
A132	76122	164	22
A133	76122	164	22
A1332-4-6-30	01276	102	6
A1332-8-8-21	01276	102	4
	01276	103	5
A1479	41947	21	44
A1517	49147	21	54
A1526	41947	22	22
A1530	41947	22	25
A1532	41947	21	51
A1629	41947	22	29
A1633	41947	22	27
A1639	41947	22	
A1667	41947	22	34
A1689	41947	23	25
A1712	41947	21	28
A18623-1	91940	113	15
A2000-6-6	98660	50	13
	98660	50	29
A2000C6-8	98660	50	15
A201	76122	165	18
A202	76122	165	27
A2100-4-4	98660	50	42
A2100C6-6	98660	50	31
A22C0-4	98660	50	45
A2663	41947	22	30
A29106	41625	83	11
A3000-6-6-6	98660	50	11
A3163	72850	48	36
A3929	49147	21	22
A404NF	00843	93	24
A4200-6	98660	50	9
A45C0C6-6	98660	50	28
A604LB	00843	93	5
A8622	91940	113	16
A8658-12	91940	113	1
BM2THR1177	91940	113	
BP9511S	91940	113	
BV200567	99066	115	4
B13251	41625	83	6
CA24-24MB	30327	100	
CB24-24BM	30327	118	
CB24-24MB	30327	118	
CB24-24PA	30327	118	
CCCC419TYPE1	81348	158	
CMD2A111	01843	52	
CMD2A221	01843	52	
CP2NL2R20BL3M	62983	138	
CP200576	01843	59	1
CP202799	01843	60	1
CT10F10	62983	142	
C115025	92121	90	6
C3069X8X4	79470	102	3
	88334	102	28
	88334	103	16
C3069X8X6	79470	123	5
	79470	123	9
C3109X12X8	79470	51	25
	79470	51	45
C31C9X8X4	79470	51	20
C3309X8	79470	102	20
	79470	104	11
C3509X8	79470	51	21
	79470	102	17

Reference No.	Mfr Code	Fig No.	Item No.
C3509X8	79470	103	7
	79470	104	6
C3709X8	79470	51	22
	79470	102	10
	79470	103	15
	79470	104	3
C5205X4X8	79470	104	1
C5205X8	79470	51	49
C5205X8X8	79470	51	3
C5305X8	88334	104	15
C5405X8	79470	51	7
C5405X8X12	79470	51	27
C5405X8X8	79470	51	11
	79470	51	57
C5505X8	79470	51	4
C5506X8	79470	51	2
C5605X8X8X8	79470	51	24
C5705X8	79470	51	9
C5755X8X8X8	79470	51	29
C5955X8	79470	51	15
DU1-50-6	47296	145	4
	47296	146	1
D18356	41625	76	24
D201W2	81640	91	4
D37425	72582	63	4
D608	79470	51	
D724	30327	118	
	30327	118	
E19247-1	41625	76	25
FB101	02249	108	
FEDSPECQQS633FS103	81348	107	3
FE200575	01843	59	3
	01843	60	3
FFS107	81348	95	1
FFT276TYPE2	81348	157	11
FFW84CLASSASTYLE2	81348	48	41
FHN23W	81349	91	2
FIG1565-2IN	79577	21	17
FIG251	45387	157	8
FIG305	45387	157	10
FIG528	46576	20	4
FIG82ND312INLG	46576	156	6
FI1338	01843	54	4
FI1339	01843	54	6
FI1340	01843	54	3
FI1341	01843	54	7
FL202603	01843	56	4
FL202693	01843	56	52
FL202694	01843	56	51
FP7	47296	146	5
FRH300116	01843	59	
FRK300382-3A	01843	60	
FO7A32V15A	81349	90	3
FO9A250V10A	81349	91	3
F56	36581	132	4
GA100201	01843	59	2
	01843	60	2
GA202082	01843	56	50
GG200656	96906	49	1
	96906	50	1
GUN10-23	26571	101	19
GUN1000-40-24	16632	24	2
GUN20-26-27-28	26571	10	15
GUN20-29	26571	10	16
GUN20-32	26571	10	20
GUN39F38	26571	22	35
GUN39F39	26571	22	33
GUN39P1	26571	22	13
GUN39P10	26571	22	26
GUN39P4	26571	22	32
GUN39P5	26571	22	28
GUN39P7	26571	22	23
GUN39P9	26571	22	15
GU200574	01843	59	4
G488	76714	93	4
HD2000A	72922	30	
HD2000A93A	72922	30	12
HD98A	72922	30	7
HD99A	72922	30	5
HG200570	01843	59	6
HG202803-3A	01843	60	4
HHG156	81348	10	

Reference No.	Mfr Code	Fig No.	Item No.
HFG156	81348	11	
	81348	22	
	81348	23	
	81348	95	
	81348	158	
	81348	158	
	81348	158	
	81349	21	
HHG156CLASSB	81348	10	
HHP46	81348	25	
HM202656-1	01843	52	3
HM202656-2	01843	52	3
HPA300118	01843	58	
HPGD	71400	90	2
HQ117	09608	147	2
HQ144	09608	147	3
H18810-7	41625	79	1
H39400-61	41625	83	7
JMC175	75165	150	12
JS319-8S	03925	104	14
JS6	03925	123	
LCM8145-1847016	80064	92	13
LE721156	24956	156	1
	24956	156	2
LHCOT3	73145	97	4
LP2377-11	61112	94	3
LP3234-1	61112	94	4
LP3239-48	61112	94	2
LP657	61112	94	1
LS100G	81640	93	2
MD24-12	57418	89	2
MD24-2	97418	88	2
MF360	05160	141	2
MG1-4-12	20252	168	1
MG1-5	20252	168	2
MG1-7	20252	168	3
MILA7021CLASS1	81348	25	
	81349	24	
	81349	25	
MIL85423-7TYPEB	81349	92	5
MILB857TYPEBCLASSC	81348	107	2
MILB857TYPE2GR2	81349	107	1
MILC10316CLASS1GRA	81349	24	7
MILC915-6TYPEDH03	81349	97	12
MILF1181	81349	11	17
MILF20627	81349	6	8
MILH13351TYPE2CLAS	81349	51	
MILH8794S1ZE4	81349	50	
MILP8184	81348	95	
MILR3065GRADESC614	81349	163	
MILR880	81349	156	
MILS20166	81349	156	
MILT2015TYPEE	81349	102	
MILT2015TYPEC	81349	102	
	81349	103	
	81349	104	
	81349	157	
MILT24107	96906	20	
MIL20157TYPEE	81349	102	
MK2	72201	153	
MMC37F14	98042	21	23
MMC37F15	98042	21	42
MMC37F16	98042	21	24
MMC37F2	98042	21	16
MMC37F7	98042	21	15
MMC39-1-18	98042	24	5
MMC39-43	98042	24	3
MMC39-47	98042	24	4
MMC39-53	98042	24	6
MMC40F38	98042	19	2
MMC40F40	98042	19	4
MMC40F56	98042	19	7
MMC40M13	98042	19	5
MMC41F4	98042	10	16
MMC41F9	G1276	10	1
MMC41M2	98042	10	19
MMC41M4	98042	10	17
MMC41M5	82021	10	21
MMC42-17	98042	150	8
MMC42-18	98042	150	7
MMC42M14	98042	150	12
MMC42M3			13

Reference No.	Mfr Code	Fig No.	Item No.
MMC42M4	98042	150	10
MMC42M7	98042	150	6
MMC42M8	98042	150	2
MMC42M9	98042	150	3
MMC45-12	98042	154	23
MMC45M1	98042	154	1
MMC49F10	98042	159	5
MMC49F11	98042	159	6
MMC49F12	98042	159	7
MMC49F13	98042	159	8
MMC49F8	98042	159	2
MMC49F9	98042	159	4
MMC60-52	98042	49	5
MMC60-53	98042	49	9
MMC60-54	98042	49	10
MMC60-55	98042	49	6
MMC60-56	98042	49	4
MMC60-57	98042	49	12
MMC60-58	98042	49	2
MMC60-59	98042	49	17
MMC60-60	98042	49	16
MMC60-61	98042	49	13
MMC60-62	98042	49	3
MMC60-63	98042	49	7
MMC60-64	98042	49	15
MMC60-65	98042	49	14
MMC60-66	98042	49	8
MMC60-67	98042	49	11
MMC61-20	98042	100	1
MMC61-43	98042	100	2
MMC61PC26	98042	100	31
MMC62-13	98042	118	1
MMC62-32	98042	118	22
MMC62-33	98042	118	23
MMC62-45	98042	118	3
MMC62-46	98042	118	4
MMC62-53	98042	118	5
MMC62-54	98042	118	6
MMC62-55	98042	118	7
MMC62-56	98042	118	8
MMC62-87	98042	118	10
MMC62-93	98042	118	12
MMC62-95	98042	118	
MMC62023	98042	118	2
MODEL24V	01162	152	
MP75	05160	141	
MR3000-44-24	16632	24	2
MS15003-1	96906	17	7
	96906	45	8
MS15004-1	96906	148	3
MS15584-11	96906	96	9
	96906	156	17
MS15584-16	96906	96	5
MS15584-6	96906	96	13
	96906	97	3
	96906	97	11
MS15613-2	96906	93	7
MS15795-811	96906	139	31
MS15795-812	96906	97	14
MS15795-817	96906	25	7
	96906	25	12
MS17159-98	96906	96	4
MS17275	96906	93	6
MS17791	96906	92	2
MS17845YMBOL211-1	96906	96	11
MS17847SYMBOL207-2	96906	96	6
MS17847SYMBOL208-2	96906	96	7
MS17847SYMBOL214	96906	97	10
MS17847SYMBOL217-1	96906	96	10
	96906	96	12
MS17847SYMBOL218	96906	97	2
MS17847SYMBOL218-1	96906	96	8
MS19061-3	96906	13	13
MS20822-6	96906	55	29
MS21304-6	96906	157	1
MS21318-20	96906	110	6
	96906	111	11
MS21333-59	96906	63	2
MS24628-66	96906	97	1
MS24665-132	96906	16	1
MS24665-283	96906	139	30
MS24665-300	96906	156	7

Reference No.	Mfr Code	Fig No.	Item No.
MS24665-370	96906	97	13
MS24665-643	96906	150	1
MS24665-656	96906	150	1
MS28237-327	96906	93	3
MS27053-8	96906	21	21
MS27183-10	96906	48	
MS27183-14	72582	43	3
MS34355-199	96906	137	2
MS35059-21	96906	90	8
MS35059-22	96906	93	22
MS35059-24	96906	90	10
	96906	91	6
MS35206-242	96906	47	12
MS35206-243	96906	48	12
MS35206-277	96906	45	4
MS35215-52	96906	152	9
MS35215-57	96906	152	5
MS35215-59	96906	152	6
MS35215-61	96906	152	11
MS35249-142	96906	138	1
MS35265-63	96906	4	18
MS35265-81	96906	33	17
MS35266-61	96906	48	18
MS35266-64	96906	48	
MS35295-57	96906	18	7
MS35295-66	96906	5	10
MS35295-67	96906	5	21
MS35307-306	96906	117	5
MS35307-362	96906	25	3
MS35307-409	96906	25	11
	96906	158	11
	96906	158	14
MS35307-413	96906	25	6
MS35308-267	96906	78	3
MS35338-134	96906	6	15
MS35338-141	96906	25	2
MS35338-143	96906	25	5
MS35338-162	96906	156	21
MS35338-42	96906	48	13
MS35338-43	96906	47	19
	96906	48	19
MS35338-44	96906	13	8
	96906	26	9
	96906	33	
	96906	33	2
	96906	33	8
	96906	33	18
	96906	37	3
	96906	40	2
	96906	40	5
	96906	55	13
	96906	161	7
MS35338-45	96906	1	5
	96906	2	
	96906	2	12
	96906	3	20
	96906	4	14
	96906	5	16
	96906	17	27
	96906	18	15
	96906	26	4
	96906	33	
	96906	38	8
	96906	41	2
MS35338-46	96906	1	2
	96906	3	24
	96906	4	8
	96906	5	5
	96906	5	11
	96906	5	22
	96906	6	25
	96906	7	
	96906	17	2
	96906	17	19
	96906	17	42
	96906	18	8
	96906	18	19
	96906	27	2
	96906	28	10
	96906	29	12
	96906	36	
	96906	36	

Reference No.	Mfr Code	Fig No.	Item No.
MS35338-46	96906	38	4
	96906	42	3
	96906	42	5
	96906	43	2
	96906	48	
	96906	63	14
MS35338-469	96906	64	
MS35338-47	96906	27	28
	96906	28	2
MS35338-48	96906	7	23
	96906	27	30
	96906	28	4
	96906	55	2
	96906	55	7
MS35338-50	96906	52	2
MS35338-8	96906	48	
	96906	63	17
MS35461-39	96906	76	23
MS35650-106	96906	152	3
MS35690-424	96906	7	2
	96906	8	2
	96906	9	3
MS35690-805	96906	48	9
	96906	48	42
MS35691-19	96906	23	30
MS35691-3299	96906	78	1
MS35691-525	96906	7	17
MS35691-59	96906	156	9
MS35691-805	96906	48	7
	96906	48	40
MS35758-8	96906	164	14
	96906	165	17
MS35782-4	96906	18	12
	96906	27	4
MS35782-5	96906	5	14
	96906	6	1
	96906	18	13
MS35782-6	96906	26	7
MS35733-2	96906	2	10
MS35785-4	96906	22	10
MS35842-11	96906	2	
	96906	19	6
	96906	20	14
	96906	23	1
	96906	23	14
	96906	29	1
MS35842-12	96906	11	12
	96906	20	32
	96906	21	1
	96906	22	1
	96906	22	5
	96906	23	5
	96906	161	18
	96906	162	2
	96906	162	13
	96906	162	26
MS35842-13	96906	18	1
	96906	18	4
	96906	19	3
	96906	21	5
	96906	139	3
	96906	160	3
	96906	161	1
MS35842-14	96906	5	1
	96906	5	8
	96906	11	5
	96906	19	1
	96906	20	49
	96906	20	62
	96906	21	9
	96906	21	13
	96906	22	7
	96906	23	26
	96906	29	8
	96906	38	9
	96906	159	1
	96906	160	5
MS35842-15	96906	10	18
	96906	20	5
	96906	160	1
MS35842-16	96906	24	1
	96906	25	9

Section V. INDEX-FEDERAL STOCK NUMBER AND REFERENCE NUMBER CROSS-REFERENCE TO FIGURE AND ITEM NUMBER

Reference No.	Mfg Code	Fig No.	Item No.
MS35842-16	96906	118	11
MS39158-7	96906	21	12
MS39166-7	96906	21	11
MS39230-3	96906	71	4
MS39230-4	96906	71	2
MS39243-25	96906	46	1
MS39256-2855	96906	46	1
MS39256851	96906	46	1
MS39256858	96906	165	1
MS45901-4	96906	152	4
MS49005-8	96906	29	10
	96906	71	1
MS51959-61	96906	156	5
MS51959-63	96906	156	4
MS51959-67	96906	158	5
MS51963-66	96906	107	5
MS51967-14	96906	23	38
MS51967-2	96906	161	6
MS51968-2	96906	40	4
MS51968-5	96906	17	26
MS51968-8	96906	5	
	96906	6	24
	96906	7	
	96906	29	11
	96906	33	
	96906	42	1
	96906	55	9
	96906	25	1
MS51971-3	96906	25	4
MS51971-5	96906	156	20
	96906	158	4
MS51971-8	96906	156	10
MS51972-10	96906	148	1
MS75059	96906	153	20
MS90725-110	96906	7	22
	96906	55	6
MS90725-112	96906	27	29
	96906	28	3
MS90725-35	96906	26	3
MS90725-37	96906	4	13
MS90725-38	96906	18	14
	96906	38	7
MS90725-46	96906	3	19
MS90725-59	96906	3	23
MS90725-60	96906	5	4
	96906	7	
	96906	38	3
	96906	42	4
	96906	43	1
	96906	23	44
MS90725-64	96906	15	1
MS90725-66	96906	40	1
MS90725-7	96906	4	7
MS90725-73	96906	27	27
MS90725-87	96906	28	1
	96906	48	
MS90726-5	96906	6	26
MS90726-62	96906	40	6
MS90726-9	96906	37	2
MS90728-36	96906	5	15
MS90728-51	96906	33	1
MS90728-6	96906	33	7
	96906	18	18
MS90728-61	96906	36	
	96906	5	
MS90728-62	96906	36	
	96906	64	
MS90728-63	96906	17	1
	96906	17	18
	96906	45	
	96906	45	1
MS90728-64	96906	6	14
MS90728-8	96906	33	
	96906	33	7
	76122	164	30
M108	74400	96	3
M11554	41947	21	55
M15126	74400	96	2
M1670	76122	166	
M28224	97419	88	3
M6-1	97418	89	3
	97418	88	4
M7-3	97418	89	4
NATIVE	76528	150	14
NC3030	97539	90	5
NF8401	02249	140	
NO250-1-2	14959	21	7
NT5-10CA	01843	56	46
N10308	97539	90	9
N30308	97539	91	7
PATTERNDFMO-5000	38508	95	4
	38508	95	5
PATTERNDRMO-5000	38508	95	8
PD10-101	74163	161	17
PD10-480	74163	161	31
PD10-480-2X2X1-2IN	74163	162	13
PD15-101-2IN	74163	162	23
PD15-154	74163	162	44
PD15-235-2-1-2IN	74163	162	25
	74163	163	6
PD15-235-2IN	74163	161	16
PD15-242	74163	161	11
PD15-272-1-1-2IN	74163	161	21
PD15101-2-1-2IN	74163	162	29
	74163	163	19
PF10-8-6	98660	50	20
PF10L6-3	98660	50	26
PF10L6-3INLG	98660	50	32
PF10L6-4INLG	98660	50	24
PF10L8-3INLG	98660	50	18
PF101-12-6	98660	50	12
PF132	70040	3	11
PF201-4	98660	50	41
PF201-6	98660	50	33
PF201-8-6	98660	50	39
PF21-6-4	98660	50	27
PF3010-4	98660	50	43
PF3010-6	98660	50	30
PF3011-8	98660	50	17
PF31-6	98660	50	25
PG7628	99066	115	6
PMH	03925	119	
PMH20	03925	119	
	03925	120	
	03925	121	
	03925	122	
PM20	03925	120	
PM32	03925	119	
	03925	120	
PM326-8-8S	03925	104	8
PM4	03925	119	
	03925	119	
PM6	03925	123	
PM8	03925	123	
QQA250-7	81348	158	
QQB637	81348	11	
QQS741	81348	23	
QQS763CLASS304	81348	156	
QQS766	81348	23	21
QQT830	81348	51	
QQT830ASEAMLESSCDS	81348	163	
QQT830SEAMLESS	81348	51	
	81349	51	
RA1	01162	152	8
RA11	01162	152	2
RA12	01162	152	1
RA2	01162	152	12
RA20	01162	152	7
RA6	01162	152	10
RBL1-100	01276	11	
RF8401-2	02249	140	
RF8403-2	02249	140	
RPA300412	01843	56	
RPA308090A	01843	56	
RRC271CLASS8	81348	10	
	81348	11	
RRW0041OTYPE1CLASS	81348	157	
RRW360	81348	11	
R1441	79645	150	5
SA20	03925	122	
SA45A	03925	122	
SC1627	01843	54	8
SC2046	01843	56	47
SEAGULLTYPE1LH	72201	150	4

Reference No.	Mfr Code	Fig No.	Item No.
SEAGULLTYPE1RH	72201	150	4
SE1047	01843	56	53
SF1012-8-8	03925	102	2
SF1025-6-8	03925	103	36
SF1094-8-8	03925	51	53
SF211-4	03925	102	
SF211-8	03925	102	
	03925	103	
	03925	103	
	03925	104	
SF215	02249	109	1
SN200568	99066	115	5
SP202109	01843	59	5
STYLEKS	72661	11	7
	72661	11	9
S10416M616-616-28	79470	51	32
S45A20	03925	119	
S75	72922	30	1
S7720COMPOSITION30	81349	97	
S82A	72922	30	3
S88B	72922	30	6
S90A20	03925	119	
TEMFMAT2-1-2IN	08869	24	7
TR60STYPEMCLASS2	81348	97	
TU202909	01843	54	2
TYPE5DFM2-1-2IN	385C8	92	9
TYPE5PATDMF	385C8	100	22
	385C8	118	45
U124	30327	100	
VA202906	01843	54	11
VA202908	01843	54	5
VCA300378	99066	50	47
VD8	72922	30	11
VD2502	72922	30	9
VD3	72922	30	8
V110-25-1C10LS214	62983	106	
V110-25-1C10S21	62983	106	
V210-5-1C12S85	62983	105	
WA5-8C4	01843	54	9
WA6-10CA	01843	56	48
WWF24-19-1030	05890	156	3
WWN351	81348	12	2
	81348	103	18
	81348	103	42
	81349	103	4
WWN351TYPE1	81348	11	14
	81348	20	41
	81348	21	36
	81348	23	
	81348	23	36
WWN351TYPE2	81348	21	32
WWP351CLASS1	81348	20	
	81348	21	
	81348	21	
	81348	22	19
	81348	23	
	81348	23	
WWP351GRADEASTD	81348	21	
WWP351SPECCLASS1	81348	162	
WWP351TYPE1	81348	22	
WWP377	81348	12	
	81348	20	
	81348	20	
	81348	23	
	81348	23	
	81348	23	
	81348	23	
WWP404GRADEA	81348	23	
WWP404GRADEACLASSA	81348	161	
WWP404GRADEBCLASSA	81348	163	
WWP4040GRADEACLASS	81438	162	
WWP460CLASSA	81348	11	28
	81348	12	5
	81348	21	61
	81348	23	35
WWP460CLASSB	81348	23	29
WWP471ATYPE1CLASS1	81348	21	39
WWP501TYPE1CLASSA	81348	21	32
WWP521	81348	103	39
	81348	103	41
WWP521TYPE1	81348	21	38
WWP799TYPEKFORM1	81348	162	

Reference No.	Mfr Code	Fig No.	Item No.
WWT351TYPE1	81348	11	24
WWT755	81348	21	
WWT791GRADE3TYPEB	81348	23	
WWT799	81348	11	
WWT799A	81348	22	
WWT799CLASS1	81348	21	
	81348	22	
	81348	22	
	81348	22	
WWT799TYPECLASS1	81348	161	
	81348	162	
WWT799TYPEK	81348	11	
	81348	21	
	81348	22	
WWT799TYPEKCLASS1	81348	161	
	81348	162	
WWT799TYPEKCLASS2	81348	21	
	81348	21	
	81348	161	
	81348	162	
WWT799TYPEKFORM1	81348	21	
	81348	162	
	81348	163	
	81438	163	
W1049	41947	22	24
W1069	41947	21	43
W1178	41967	162	10
W1187	41947	21	31
W1287	41947	21	40
W1739	41947	22	36
W2034	41947	21	53
W2085	41947	21	25
W2086	41947	21	27
W2334	41947	21	20
W4011Q	41947	21	26
W4098	41947	21	47
W9088	41947	21	45
ZZH428	81348	5	2
	81348	10	
ZZH428CLASS2TYPE3G	81348	22	
ZZH428TYPE1CLASS2G	81348	38	
ZZH428TYPE1CLASS1G	81348	22	
ZZH428TYPE1CLASS2G	81348	22	
ZZH428TYPE1GRADE	81348	162	
ZZH428TYPE1GRADEAC	81348	23	
	81348	118	
ZZH428TYPE1GRADEBC	81348	20	
	81348	20	
	81348	20	
	81348	23	
ZZH428TYPE2CLASS1G	81348	22	
ZZH428TYPE2GRADEAC	81348	20	
	81348	20	
ZZH428TYPE2GRADEBC	81348	23	
	81348	23	
	81348	23	
	81348	32	
	81348	161	
	81348	161	
	81348	162	
ZZH428TYPE3GRADEBC	81348	161	
	81348	162	
	81348	163	
0102-8-6	08752	101	14
	08752	103	25
015	02249	140	1
02508A108	79470	51	
02508A108668-44	79470	51	17
02508A608	79470	51	
	79470	51	
02508A608608-30	79470	51	23
02508A608608-36	79470	51	26
02508A608608-75	79470	51	14
02508A668	79470	51	
02508A860	79470	51	
05166	13800	6	23
I	14959	49	19
	14959	51	52
	14959	162	36
	14959	163	20
1-2INIPSX2INLG	63686	51	46
1-2INIPSX3AND1-2IN	63686	51	19

Reference No.	Mfg Code	Fig No.	Item No.
1-2IN2000BW06	14959	103	26
1-2IN2000L8W06	14959	102	15
1-2IN300L8	14959	103	23
1-2444BCE	98991	100	30
	98991	123	2
1-4SHPS	24835	100	29
1-8INX1INLG	14959	163	2
1CH3D3	98905	96	16
1HF2-209	26571	22	11
1INIPSFX1INTUBE	14959	21	3
1C	72922	30	4
10-02632-02	24785	111	13
10-04438-08	24765	111	15
10-05139-03	24785	110	7
	24785	110	8
10-07524-04	24785	111	12
10-6C8TX5	08752	100	3
10-90	31211	46	
10E8TXS	08752	100	12
100X8	79470	10	2
1000-1-0	47296	145	2
1000-155	47296	145	5
1000-2-0	47296	145	3
	47296	146	2
1000-5-0	47296	146	8
1000-6-0	47296	146	11
100014	72582	17	10
100015	72582	17	28
100158	72582	55	1
101075	72582	27	6
1012-6-8	03925	101	9
1012-8-8	03925	101	8
1013-32-32	03925	119	18
	03925	120	23
1024MWSH	91435	24	5
1025-4-6	03925	50	35
1025-6-4	03925	101	17
1025-6-8	03925	101	4
1037-4-4	03925	119	13
103709	72582	13	21
103868	72582	7	8
103877	72582	40	
106573	72582	1	4
108687	72582	64	
109A	76122	154	26
109288	72582	63	1
1093-8-6	03925	101	18
1094-8-8	03925	101	7
11069	81321	7	4
	81321	8	4
	81321	9	5
110730	72582	55	10
1108850	16764	47	
1108890	16764	48	
1110X10	79470	21	
1118092	72582	48	
112	76122	164	20
1121	48422	23	32
	48422	161	17
	48422	161	30
11217	81321	8	12
113-1-3-8IN	14959	21	59
113000	62983	105	3
113740	21450	21	18
114366	72582	28	6
1144	86376	84	3
1145	86376	84	4
115	76122	164	33
1160	86376	84	16
117-1-1-2	14959	21	35
118753	72582	55	28
118755	72582	55	35
118831	16764	47	
	16764	48	
119	76122	164	12
12-4TR8TXS	08752	100	26
12-8C8TXS	45681	100	11
12-8CTX	08752	101	12
	08752	103	38
12-8F8TXS	08752	103	15
12E8TXS	08752	100	19
12F8TLS	08752	100	17

Reference No.	Mfg Code	Fig No.	Item No.
12FC24	97418	89	
120033	98342	90	7
120233	72582	27	1
120393	72582	4	15
120428	72582	42	24
	72582	42	26
121-2	14959	159	15
1211-3-4IN	26403	11	15
121902	72582	26	8
122161	72582	48	
122366	72582	36	3
	72582	45	7
123197	72582	2	
	72582	2	11
125-4510928-38	80064	97	16
125-4510928-39	80064	97	9
125-4510928-45	80064	97	5
125-4510928-48	80064	97	17
125-4510928-64	80064	97	6
12501-2	14959	19	10
126189	72582	33	
1273	62983	105	19
	62983	106	1
1276A	62983	106	2
128	76122	164	28
129	76122	164	31
13-7-9-208	26571	24	6
1303-2	14959	19	9
130311-2	14959	159	10
13032	14959	159	11
13033-4	14959	19	12
13113-8IN	14959	21	
131375	72582	6	2
132	76122	167	
132011-2	14959	159	12
13202	14959	159	13
132021-2	14959	159	14
13207E2025-1	97403	92	12
13291	81321	8	15
13566	81321	8	11
136	76122	164	8
137-3-8X2IN	26403	23	31
1371-1-4IN	26403	120	1
137405	72582	33	
137406	72582	13	5
137422	72582	75	20
137894	72582	10	14
138	26403	162	4
138-1-1-2IN	26403	23	
138-1IN	26403	23	
138-2-1-2IN	26403	163	3
139	76122	167	2
14-40	31211	46	33
14113-1	81321	8	1
	81321	9	2
141195	72582	13	10
	72582	33	12
142583	72582	16	3
143343	72582	18	11
144034	72582	29	7
144116	72582	64	
145-4510915F2	80064	32	7
145-4510916P13	80064	158	2
145-4510923-51	80064	139	33
145-4510923-64	80064	139	36
145-4510923-65	80064	139	40
145-4510931-29	80064	158	12
145-4510931-30	80064	158	13
145-4510931-36	80064	158	7
145-4510931-39	80064	158	6
145-4510931-40	80064	158	16
145-4510931-8	80064	158	3
	80064	158	10
145-4510932-17	80064	95	3
145-4510932-18	80064	95	2
145-4510932-23	80064	100	31
145-4510934-18	80064	157	7
145-4510934-48	80064	157	13
145-4510934-62	80064	157	4
145-4510934-63	80064	157	6
145-4510943-10	80064	117	7
145-4510943-2	80064	117	6

Reference No.	Mfg Code	Fig No.	Item No.
145-4510954M5	80064	148	9
145-4510955-1-3-5	80064	156	
145-4510955-26	80064	156	
145-4510955-27	80064	156	
145-4510955-28	80064	156	
145-4510955-3	80064	156	24
145-4510955-33	80064	156	
145-4510955-38	80064	156	8
145-4510955-39	80064	156	12
145-4510955-41	80064	156	18
145-4510955-42	80064	156	19
145-4510955-43	80064	156	13
145-4510955-48	80064	156	14
145-4510955-49	80064	156	25
145-4510955-5	80064	156	15
145-4510955-55	80064	156	
145-4510955-60	80064	156	
145-4510956-40	80064	156	
146	76122	164	25
14614	81321	8	14
14797	81321	8	13
14798	81321	9	10
15-10	31211	46	43
15-11	31211	46	47
15-3	31211	46	27
15-7	31211	46	32
15-8	31211	46	36
15F22-209	26571	22	9
15002	81321	7	7
	81321	8	7
1503-3-4000	82271	50	46
1503-6	01276	49	
	01276	102	
1503-8	01276	49	
	01276	102	
	01276	103	
1507359	99974	96	2
1508350	72582	64	
1509	02249	108	8
1509-16	01276	118	
1509-20	01276	118	
152	76122	164	19
1528	01276	71	
1528732	72582	61	38
	72582	63	5
1535530	72582	41	
1536316	72582	41	
1536341	72582	41	6
154	76122	164	3
1543776	72582	1	6
1543857	72582	4	2
1545	02249	108	9
1546	02249	108	3
1547	02249	108	5
1548	02249	108	6
1549	02249	108	4
155-3-4IN	41592	10	23
1550	02249	108	2
1552	02249	108	7
1557	02249	140	15
15605	97418	88	1
1561	02249	140	17
1561509	72582	41	
1563	02249	109	3
	02249	140	14
1564	02249	109	4
	02249	140	11
1565	02249	109	5
	02249	140	12
1565185	72582	41	6
1566	02249	109	13
1568	02249	108	1
	02249	140	2
1569	02249	109	11
	02249	140	6
1569106	72582	41	
1569407	72582	41	
1569669	72582	41	5
157	76122	164	7
1570	02249	140	7
1571	02249	109	10
1572	02249	140	5
1573	02249	109	8
	02249	140	4
1574	02249	109	9
	02249	140	8
1575	02249	140	16
1576	02249	140	10
1578	02249	109	6
	02249	140	9
1579	02249	109	7
	02249	140	3
158	76122	164	6
1587	02249	140	18
1589	02249	109	2
1590	02249	109	12
1591-125	02249	109	14
1599	02249	140	17
16-12FBTXS	45681	100	8
16-12TRBTXS	08752	100	27
16-28	31211	46	30
16JBTXS	08752	100	9
16M20UFS	08752	119	
16RBTXS	08752	100	20
160-6	47296	145	
160-8	47296	146	
161-12TRBTXS	45681	100	10
1610	70278	128	11
1611-6	79470	21	57
1611X12	79470	11	
16131	05748	161	8
1650	95879	80	16
16622	81321	8	16
16910D608608-44	79470	51	55
	79470	51	56
16910D608608-72	79470	51	6
16910D608608-75	79470	51	48
17433	81321	7	5
	81321	8	5
	81321	9	6
17771	81321	7	3
	81321	8	3
	81321	9	4
17783	81321	7	6
	81321	8	6
	81321	9	7
179816	72582	41	1
179857	72582	55	3
181333	72582	55	12
181365	72582	7	
18142	81321	8	17
18143	81321	8	
183201	72582	13	8
183584	62983	105	4
1847034P3	98042	21	37
186285	72582	48	
186312	72582	36	
186601	72582	33	1
186612	72582	17	41
186658	72582	42	2
186678	72582	28	9
187	76122	164	13
189691	72582	71	9
19-2-211	26571	10	1
1900FFG	98847	51	12
1900FFG1-4IN	38508	49	22
1900FFG3-8IN	38508	49	21
1904981	16764	47	21
	16764	48	21
1904982	16764	47	20
	16764	48	20
1904987	16764	48	
1904988	16764	48	3
	16764	48	26
1904998	16764	48	10
1906016	16764	47	1
	16764	48	1
1906902	16764	47	14
	16764	48	14
1907471	16764	47	11
	16764	48	11
1907474	16764	47	
	16764	48	
1907475	16764	47	22

Reference No.	Mfg Code	Fig No.	Item No.
1907475	16764	48	22
1907477	16764	48	25
1907507	16764	47	
	16764	48	
1907613	16764	48	2
1908698	16764	48	
1912386	16764	47	
	16764	48	
1912387	16764	47	
	16764	48	
191249	72582	1	1
1913080	16764	47	
	16764	48	
1914107	16764	48	
1914580	16764	47	
1914648	16764	48	8
1914869	16764	47	2
1916439	16764	47	
1928500	16764	47	
1928510	16764	47	39
	16764	48	39
1931671	16764	47	
	16764	47	43
	16764	48	
	16764	48	43
	16764	47	23
1931680	16764	48	23
	16764	47	36
1938993	16764	47	18
1568656	14959	103	45
198E3-4IN	70270	155	3
1988	62983	124	2
199491	62983	124	1
199740	31211	46	40
2-4	63686	162	20
2INCLOSE	31211	46	31
20-109	31211	46	42
20-110	31211	46	25
20-111	31211	46	41
20-113	31211	46	39
20-115	31211	46	35
20-116	31211	46	28
20-117	31211	46	24
20-119	31211	46	45
	31211	46	29
20-135	31211	46	37
20-156	31211	46	26
20-54	31211	46	46
	31211	46	44
20-68	31211	46	37
20-72	08752	118	15
208GTXS	05160	141	7
200085	05160	141	8
200174	05160	141	6
200879	05160	141	3
200882	80064	51	51
201-4510950-1	80064	51	50
201-4510950-10	80064	51	54
201-4510950-11	80064	51	1
201-4510950-12	80064	51	5
201-4510950-2	80064	51	10
201-4510950-24	80064	51	13
201-4510950-3	80064	51	58
201-4510950-4	80064	51	30
201-4510950-5	80064	51	31
201-4510950-6	80064	51	8
201-4510950-7	80064	51	16
201-4510950-8	80064	51	28
201-4510950-9	05160	141	1
201132	05160	141	4
201164	05160	141	5
201177	08752	101	13
20142-12-12	01276	49	23
2021-6-6S	01276	49	24
2021-6-8S	01276	49	57
2021-8-12S	01276	50	14
	01276	49	49
2024-4-6S	01276	49	25
2024-6-6S	01276	49	26
2024-6-8S	01276	49	28
2025-6-8S	76122	165	29
203	01276	49	29
2030-6-8S			

Reference No.	Mfg Code	Fig No.	Item No.
	76122	165	24
204	01276	10	8
2047-8-6S	80064	25	16
205-4510947-33	80064	25	14
205-4510947-44	80064	25	17
205-4510947-54	80064	25	21
205-4510947DET3D	80064	25	18
205-4510947DET4848	80064	25	8
205-4510947DET4CPF	80064	25	8
205-4510947DET4CSF	80064	25	15
205-4510947DET4C1	80064	25	19
205-4510947DET4D1	80064	25	19
205-4510947DET4D5D	80064	25	13
205-4510947DET5A	80064	25	20
205-4510947DET5B	80064	25	8
205-4510947DET5CPA	80064	25	8
205-4510947DET5CSA	62983	125	2
205077	62983	125	1
205533	08752	101	11
20642-12-12	72582	42	33
2070610	76122	165	25
208	76122	165	25
208M	01276	49	27
2080-6-6S	01276	102	30
2080-8-8	01276	49	30
2081-12-6S	01276	100	4
2081-24-16S	01276	118	25
2081-24X20S	01276	49	48
2081-6-2S	01276	49	45
2081-6-4S	01276	49	50
2081-8-6S	01276	49	18
2082-4S	01276	49	47
2082-6S	01276	49	33
2083-2-2S	01276	118	14
2083-20X16S	01276	49	31
2083-6-4S	01276	49	55
	01276	49	32
2083-6-6S	01276	49	34
2089-6-6S	80064	20	29
209-4510945-1	80064	20	36
	80064	20	50
	80064	20	63
	80064	20	9
209-4510945-18	80064	20	11
	80064	20	13
	80064	20	16
	80064	20	17
	80064	20	19
	80064	20	15
209-4510945-19	80064	20	33
209-4510945-24	80064	20	23
209-4510945-26	80064	20	25
	80064	20	27
	80064	20	31
209-4510945-3	80064	20	51
	80064	20	53
	80064	20	55
	80064	20	57
	80064	20	60
	80064	20	64
	80064	20	66
	80064	20	68
	80064	20	70
	80064	20	72
	80064	20	74
	80064	20	76
	80064	20	79
	80064	20	7
209-4510945-38	76122	165	26
209A	01276	49	35
2090-6-6S	01276	49	46
	01276	49	36
2092-6-6S	01276	51	18
2093-8-8S	81321	8	8
20989	34749	11	19
210	34749	102	22
	34749	163	8
210-1-2IN	00986	101	10
210-2-7-8IN	34749	163	17
210-4510944-12	80064	11	30
210-4510944-13	80064	11	25
210-4510944-20	80064	11	

Reference No.	Mfr Code	Fig No.	Item No.
210-4510944-20	80064	11	16
	80064	12	4
210-4510944-29	80064	11	1
210-4510944-31	80064	11	4
210-4510944-33	80064	11	2
210-4510944-35	80064	11	6
210-4510944-40	80064	11	3
210-4510944-46	80064	11	13
210-4510944-51	80064	11	10
21016	81321	9	11
2103A	76122	159	
2104A	76122	159	
2105A	76122	159	
211-4	03925	101	3
211-8	03925	101	1
211-9	03925	10	
211R32	03925	120	
211R32PM32AS32-216	03925	120	22
21125	76122	166	7
	76122	167	7
2114	34749	163	16
21140	76122	164	17
	76122	167	29
21142	76122	164	10
21149	76122	167	38
21150	76122	164	24
	76122	167	40
21153	76122	164	18
	76122	167	30
21157	76122	167	25
21159	76122	164	11
	76122	167	10
21161	76122	167	35
2117-21-2IN	26403	11	8
21174	76122	164	29
	76122	167	36
21176	76122	164	1
21180	76122	164	29
	76122	167	36
21184	76122	164	21
	76122	167	3
21185	76122	167	1
21188	76122	167	31
21189	76122	164	16
	76122	167	27
21191	76122	164	4
21192	76122	164	5
	76122	165	5
21194	76122	164	2
21198	76122	167	28
212-2IN	26403	20	
21207	76122	166	36
21208	76122	165	10
	76122	166	29
2121	76122	159	
21210	76122	165	6
21216	76122	166	38
21219	76122	165	9
	76122	166	26
21220	76122	165	13
	76122	166	30
21221	76122	165	19
21224	76122	166	27
21225	76122	165	7
	76122	166	10
21226	76122	166	35
21228	76122	165	2
21233	76122	165	16
	76122	166	3
	76122	166	14
	76122	167	14
21234	76122	166	31
21236	76122	165	12
	76122	166	28
21244	76122	164	15
	76122	167	26
21260	76122	165	28
	76122	166	40
21261	76122	166	32
21267	76122	165	30
	76122	166	1
21268	76122	166	

Reference No.	Mfr Code	Fig No.	Item No.
21268	76122	166	2
21284	76122	164	20
21296	81321	7	9
214279	72582	16	7
21507	76122	166	4
	76122	167	4
2157	76122	164	9
216R20	03925	119	
21661	76122	167	33
21662	76122	166	20
	76122	167	20
21664	76122	167	37
21668	76122	166	
	76122	167	
21669	76122	167	
21670	76122	167	21
21671	76122	167	24
21672	76122	167	23
21673	76122	166	6
	76122	167	6
21675	76122	167	9
21676	76122	167	11
21677	76122	167	8
21678	76122	166	33
	76122	167	34
21679	76122	166	5
	76122	167	5
21685	76122	166	34
21691	76122	166	
21692	76122	166	24
21693	76122	166	23
21694	76122	166	21
21695	76122	166	9
21696	76122	166	11
21697	76122	166	8
2170	76122	165	3
21723	76122	166	16
	76122	167	16
21751	76122	167	32
219	76122	165	11
2200-6	98660	50	37
221R32	03925	119	
	03925	119	
221000-6S	01276	49	44
22126	13800	6	9
2223	76122	159	
2225A	76122	159	18
2226A	76122	159	
2230GRAY	77969	156	
2243465	72582	6	5
225P6	03925	123	
225P6PM6PM6-24	03925	123	10
	03925	123	23
225R5	03925	119	
225R8	03925	123	
225R8PM8PM8-10	03925	123	24
228	76122	165	23
22838	76122	165	27
22920	76122	164	34
22929	76122	164	23
	76122	167	39
22931	76122	164	23
	76122	167	41
22934	76122	165	20
22936	76122	165	29
	76122	166	39
22940	76122	166	17
	76122	167	17
22941	76122	167	
22942	76122	166	13
	76122	167	13
22943	76122	166	22
	76122	167	22
22944	76122	166	19
	76122	167	19
22945	76122	166	12
	76122	167	12
22968	76122	166	15
	76122	167	15
23071	76122	164	27
23072	76122	164	27
23073	76122	165	22

Reference No.	Mfg Code	Fig No.	Item No.
23074	76122	165	22
23075	76122	166	18
	76122	167	18
23127	76122	164	
23129	76122	165	
23173	76122	164	
23178	76122	165	
236	76122	165	4
238-8	79470	10	11
239	76122	165	8
24GBTXS	08752	118	26
24H8	24161	11	
24SG08-06	30327	100	14
24SG16-12	30327	100	21
24SJ04	30327	49	56
240	76122	165	24
242A6JS6PM6-28	03925	123	1
242R6	03925	123	
242R6JS6PM6-28	03925	123	7
	03925	123	11
24213	76122	167	
24214	76122	167	
24216	76122	167	
24217	76122	167	
245-4510946F22	80064	23	40
245-4510946F33	80064	23	
245-4510946F42	80064	23	45
245-4510946F45	80064	23	
245-4510946F50	80064	162	14
245-4510946F52	80064	23	23
245-4510946F53	80064	23	20
245-4510946F60	80064	23	18
245-4510946F9	80064	23	46
245-4510946P1	80064	23	34
245-4510946P10	80064	23	7
245-4510946P14	80064	23	43
	80064	162	17
245-4510946P4	80064	23	28
245-4510946P5	80064	23	11
245-4510946P7	80064	23	3
245-4510946P9	[illegible]	23	16
	80064	162	15
245-4510951M7	80064	150	6
245PWS1-2IN	63686	22	17
245PWS1IN	63686	23	4
245WS1IN	94026	22	16
24571	76122	166	
24572	76122	166	
246	63686	11	23
	63686	12	1
25V17A1C10L002	62983	124	
250-2-7-8IN	34749	162	32
250-2IN	34749	20	58
	34749	20	77
252	76122	165	14
252-8	79470	10	9
254-2INWBS	14959	21	34
2556-12	00624	49	
2606	14959	10	13
26187	76122	166	37
2651-12	01276	118	
268E	14959	103	46
271557	72582	52	1
272R20	03925	120	
	03925	121	
	03925	122	
272R20PMN20PMN20-3	03925	120	29
	03925	121	1
272R20PMN20SA20-13	03925	122	22
272R20PMN20SA20-20	03925	122	13
272R20PMN20SA45A25	03925	122	1
272R20PM20PM20-30	03925	120	35
28C8TXS	08752	118	30
28E8TXS	08752	118	31
286-3-4IN	37239	11	22
29777-2	81321	9	12
3-12	31211	46	38
3-14	31211	46	34
3-4INIPSX2INLG	63686	51	43
3-4INIPSX4INLG	63686	51	47
3-4INX1-2IN	14959	103	17
	14959	103	43

Reference No.	Mfg Code	Fig No.	Item No.
3-4INX1-2INX3-4IN	14959	11	27
3-8INX3-4INLG	74427	157	3
	74427	157	9
3-8INX3INLG	74427	157	5
3-8INX4INLG	08716	97	15
3-8IPSFX3-8INTUBE	14959	21	8
3C12-3-3	96259	49	20
30F000	02929	93	23
31-1	72201	153	14
31-10	72201	153	12
31-11	72201	153	11
31-12	72201	153	10
31-13	72201	153	9
31-14	72201	153	7
31-15	72201	153	2
31-16	72201	153	16
31-17	72201	153	22
31-18	72201	153	24
31-19	72201	153	19
31-2	72201	153	8
31-20	72201	153	21
31-21	72201	153	23
31-22	72201	153	17
31-23	72201	153	18
31-25	72201	153	25
31-3	72201	153	3
31-4	72201	153	4
31-5	72201	153	1
31-6	72201	153	15
31-7	72201	153	5
31-8	72201	153	6
31-9	72201	153	13
314W6-24	82271	53	
319-8	03925	101	5
320-6-6	03925	50	7
	03925	50	34
	03925	50	36
3200-6	98660	50	22
	98660	50	38
3222759	72582	40	7
323-4	03925	50	8
323-8S	03925	10	
3230393	72582	7	19
326-8-6S	03925	10	
326-8-8	98441	102	
	98441	103	
3274	02249	140	11
3277	02249	140	12
3290211	72582	45	3
3290572	72582	1	8
3291487	72582	18	9
3292492	72582	107	7
34-1-1-2	14959	161	24
34-2	14959	161	4
3405-2-1-2IN	63686	162	19
3405-2IN	63686	22	18
3409	63686	20	21
	63686	20	38
	63686	20	42
3409-3-8IN	63686	162	38
3411	63686	22	17
3411-2IN	63686	162	21
3411-2X1-2IN	63686	23	33
3411-2X1-2X2IN	63686	162	11
3413	63686	20	40
3425	63686	162	1
3430	63686	50	19
3477	63686	22	14
3486-2IN	24161	22	2
358	24161	22	6
	24161	23	6
35V25A1C10-002	62983	125	
35V25A1C10L002	62983	125	
35W	24161	20	6
	24161	22	4
	24161	22	8
	24161	23	2
	24161	23	27
35027-10-4	79470	100	25
35242	09608	107	4
35243	09608	107	6
356-2-4	03925	101	15

Section V. INDEX-FEDERAL STOCK NUMBER AND REFERENCE NUMBER CROSS-REFERENCE TO FIGURE AND ITEM NUMBER

Reference No.	Mfg Code	Fig No.	Item No.
3530	24161	159	16
35824-10	79470	100	24
36-10-210	26571	160	2
36N	24161	21	2
3605-1-1-2IN	63686	23	12
3605-1-4IN	63686	20	10
	63686	20	12
3605-1IN	63686	20	28
	63686	20	30
	63686	20	35
3605-3-4	63686	23	9
3607-1IN	63686	20	24
3607-2IN	63686	20	56
	63686	20	65
3610-1-1-2X1-1-2X1	63686	23	19
3610-1-1-2X1X1IN	63686	23	10
3610-1-4IN	63686	20	18
3623	63686	20	73
	63686	20	75
3628	63686	20	52
	63686	20	54
	63686	20	61
	63686	20	67
	63686	20	69
	63686	20	80
3634	63686	20	59
	63686	20	78
3638-1X3-4IN	63686	23	
3651	63686	23	42
	63686	162	16
3654	63686	23	13
3674	63686	23	39
3674-1IN	63686	22	21
3676	63686	20	8
	63686	20	20
	63686	20	37
37-22-210	26571	160	4
3720	24161	159	17
3732-1IN	63686	20	22
	63686	20	34
3732-3-4IN	63686	23	8
3778	98738	92	4
377G	98738	92	5
38858-210	26571	160	6
38871-210	26571	160	7
38C13C210	26571	160	8
388	26403	117	2
4-4FBTXS	08752	100	28
4-4GBTXS	08752	49	54
4-4GBTXS	08752	118	41
4EBTXS	08752	49	53
	08752	100	23
400861	91675	157	14
411-6	01276	102	
411-8	01276	102	
	01276	103	
412-4-6	01276	102	
416-4-4	03925	101	16
4175EC	24161	22	3
42X12	88334	11	21
420WS1IN	63686	20	26
420WS2IN	63686	20	71
421-12	08752	101	2
	08752	103	
421-21	08752	102	
428-1-1-2	14959	161	29
428-2	14959	161	10
	14959	162	22
434X4	79470	33	
44-05-1-4	98991	100	
44-05-2-4	98991	100	
44-05-3-4	98991	100	
44-05-4-4	98991	100	
44-05-5-60	98991	100	
4411-6S	01276	49	41
4412-12-12S	01276	118	79
4412-12S	01276	100	
4412-4-6S	01276	49	43
4412-6-8	01276	10	
4412-6-8S	01276	49	40
4412-8-8	01276	10	
444-4B	98991	102	5
444052	72582	64	
444892	72582	36	18
451	14959	21	
4512	76122	165	15
452-25	05258	158	8
453	26403	11	18
	26403	12	3
453844	16764	47	13
453894	16764	47	6
	16764	48	6
454336	16764	47	25
455532	72582	14	3
463GRAY	77969	156	
4721-6S	01276	49	37
4722-16S	01276	118	
4722-20-20S	01276	118	
	01276	118	
	01276	118	36
4722-6S	01276	49	38
474-128	01276	50	21
4741-128	01276	49	39
	01276	49	42
4790-16S	01276	118	
48-12A12-12	79470	10	10
48X10	79470	21	
	88334	11	26
48X12X12	79470	11	29
48X6X8	41947	21	58
48X8A	79470	21	
48X8X8	79470	21	60
489	26403	12	6
49X12X12	79470	11	20
492619	72582	6	11
5-16INX11-8INLG	75301	139	35
5-16INX2INLGHD	75301	139	32
5-8INX15-8INLG	75301	139	39
5-8X13	14959	19	
5V17A1C10-002	62983	124	2
50-4-18-17-7	38597	33	
50ARS24V	08108	96	15
504F	72922	30	2
508-4510948-104	80064	162	18
508-4510948-107	80064	161	22
	80064	161	28
508-4510948-116	80064	161	25
508-4510948-13	80064	163	5
508-4510948-130	80064	163	15
508-4510948-132	80064	163	14
508-4510948-138	80064	163	13
508-4510948-140	80064	163	11
508-4510948-141	80064	163	7
508-4510948-142	80064	163	18
508-4510948-144	80064	162	35
508-4510948-146	80064	163	12
508-4510948-147	80064	161	2
	80064	162	31
	80064	163	10
508-4510948-148	80064	162	43
508-4510948-152	80064	162	6
508-4510948-153	80064	162	12
508-4510948-154	80064	162	9
508-4510948-156	80064	162	3
508-4510948-158	80064	162	37
508-4510948-159	80064	162	28
508-4510948-160	80064	162	42
508-4510948-162	80064	162	40
508-4510948-165	80064	161	15
	80064	162	27
508-4510948-166	80064	161	14
	80064	162	24
508-4510948-167	80064	162	41
508-4510948-169	80064	162	39
508-4510948-173	80064	162	33
508-4510948-174	80064	162	34
508-4510948-25	80064	162	5
508-4510948-77	80064	161	3
508-4510948-89	80064	163	4
508-4510948-95	80064	161	19
508-4510958-154	80064	161	20
5109292	72582	4	6
5109765	72582	63	3
5109777	72582	4	12

Reference No.	Mfr Code	Fig No.	Item No.
5110659	72582	33	16
5111335	72582	15	3
5111462	72582	3	22
5111881	72582	1	7
5111901	72582	5	24
5112134	72582	3	21
5112418	72582	42	
5112419	72582	42	
5112421	72582	3	
5112510	72582	37	4
5112511	72582	37	5
5112512	72582	37	1
5112513	72582	37	7
5112678	72582	33	
5112679	72582	33	
5112848	72582	33	10
5112938	72582	33	
5112991	72582	5	24
5113928	72582	7	
5114625	72582	36	
5114626	72582	36	
5115396	72582	28	
5115970	72582	33	10
5115971	72582	33	
5116427	72582	36	2
5117061	72582	27	32
	72582	28	33
	72582	55	5
5117298	72582	41	3
5118061	72582	18	27
5118219	72582	13	1
	72582	26	1
	72582	33	5
5119921	72582	2	13
5119923	72582	2	18
5119926	72582	2	17
5120602	72582	3	3
5120740	72582	3	2
5122206	72582	71	3
5122473	72582	36	
5122921	72582	107	8
5123043	72582	5	
5123282	72582	2	15
5123382	72582	3	13
	72582	36	13
51238822	72582	38	9
5124002	72582	29	
5124003	72582	29	
5125178	72582	55	14
5125466	72582	55	
5126478	72582	4	9
5126686	72582	3	14
	72582	36	14
5126792	72582	33	
5127670	72582	43	6
5128751	72582	4	16
512878	72582	4	19
5128977	72582	10	6
5128978	72582	10	6
5128981	72582	10	3
5128983	72582	10	3
5128984	72582	10	3
5128985	72582	10	3
5129129	72582	3e	1
5131627	72582	27	35
5132866	72582	48	
5133431	72582	3	17
	72582	36	17
5133594	72582	3	16
	72582	36	16
5133716	72582	27	33
5134560	72582	13	9
5134628	72582	13	9
5136986	72582	10	4
5138077	72582	10	5
5138365	72582	93	9
5140373	72582	43	4
5141732	72582	43	4
5143616	72582	28	34
5143768	72582	43	6
5144188	72582	3	
5144531	72582	71	3

Reference No.	Mfr Code	Fig No.	Item No.
5144540	75582	64	
5144542	72582	3	
5144634	72582	64	
5145009	72582	13	4
5145010	72582	3	18
5145092	72582	28	35
5150057	72582	42	6
5150147	72582	4	5
5150154	72582	5	25
5150155	72582	5	18
	72582	38	14
5150188	72582	26	11
5150191	72582	26	6
5150193	72582	13	2
	72582	26	2
5150199	72582	13	3
5150246	72582	33	6
5150250	72582	15	2
5150265	72582	16	2
5150269	72582	33	3
5150329	72582	14	2
5150333	72582	14	4
5150361	72582	29	14
5150512	72582	33	4
5150568	72582	55	4
5150894	72582	33	11
5150900	72582	4	20
	72582	33	
5150941	72582	16	4
	72582	33	15
5150996	72582	16	5
5151430	72582	4	11
5151737	72582	33	13
5152904	72582	5	26
5153060	72582	33	23
5153449	72582	107	9
5154215	72582	5	20
	72582	38	12
5154538	72582	3	6
	72582	36	6
5155816	72582	41	4
5155819	72582	41	3
5156319	72582	2	14
5156498	72582	4	1
5156770	72582	5	9
	72582	29	9
5157192	72582	14	6
5157194	72582	14	5
5158432	72582	33	10
5158825	72582	13	6
	72582	75	20
5159347	72582	36	
5159430	72582	38	10
516-4510940-104	80064	102	29
516-4510940-22	80064	102	23
	80064	103	22
	80064	104	4
516-4510940-29	80064	104	2
516-4510940-35	80064	102	9
516-4510940-40	80064	104	10
516-4510940-47	80064	103	40
516-4510940-49	80064	102	7
516-4510940-50	80064	102	8
516-4510940-51	80064	103	35
516-4510940-52	80064	104	13
516-4510940-53	80064	104	12
516-4510940-54	80064	103	2
516-4510940-55	80064	102	1
516-4510940-56	80064	102	14
516-4510940-57	80064	102	21
516-4510940-58	80064	102	19
516-4510940-59	80064	102	16
	80064	103	3
516-4510940-6	80064	104	9
516-4510940-61	80064	102	12
516-4510940-63	80064	102	13
516-4510940-64	80064	102	24
516-4510940-65	80064	103	28
516-4510940-66	80064	102	25
516-4510940-68	80064	103	32
516-4510940-70	80064	103	9
516-4510940-71	80064	103	14

Section V. INDEX-FEDERAL STOCK NUMBER AND REFERENCE NUMBER CROSS-REFERENCE TO FIGURE AND ITEM NUMBER

Reference No.	Mfr Code	Fig No.	Item No.
516-4510940-74	80064	103	47
516-4510940-77	80064	103	49
516-4510940-78	80064	103	48
516-4510940-79	80064	103	44
516-4510940-93	80064	102	11
516-4510940-94	80064	103	1
516-4510940-95	80064	102	27
516-4510940-96	80064	102	26
516-4510941-151	80064	123	8
516-4510941-17	80064	123	27
5160408	72582	42	32
5161093	72582	13	19
5163760	72582	5	12
5164510940-23	80064	103	37
5166265	72582	33	
5166750	72582	2	9
5167294	72582	29	13
5167325	24617	21	30
5167485	72582	4	4
5167502	72582	4	3
5167747	72582	38	2
5167761	72582	18	21
5167762	72582	5	7
5167775	72582	38	11
5168826	72582	18	10
5170450	72582	23	36
5170961	72582	63	15
5171509	72582	2	8
5171922	72582	42	31
	72582	42	34
5172141	72582	18	22
5172764	72582	33	
5172923	72582	18	17
5172944	72582	18	16
5173018	72582	29	6
5173020	72582	18	2
	72582	18	5
5173144	72582	4	10
5173268	72582	150	9
5173471	72582	61	39
5173730	72582	26	5
5174429	72582	33	14
5174971	72582	13	18
5174973	72582	13	22
5174975	72582	13	11
	72582	13	16
5175683	72582	5	
5176228	72582	16	22
5176474	72582	27	34
5176834	72582	33	
5177026	72582	27	36
	72582	107	10
5177217	72582	2	
	72582	29	3
5177218	72582	29	5
5177232	72582	41	
5177292	72582	13	23
5177253	72582	13	23
5177664	72582	3	
5177752	72582	33	
5177772	72582	5	27
5177777	72582	5	30
5177778	72582	5	29
5178383	72582	14	1
5178404	72582	40	3
5178427	72582	18	20
5178700	72582	13	15
5178817	72582	16	6
5181746	72582	13	14
5181747	72582	13	12
5181801	72582	29	4
5181802	72582	29	2
5182580	72582	2	16
5182645	72582	4	17
5182894	72582	3	
5183942	72582	33	9
5183994	72582	33	
5184530	72582	13	20
5185772	72582	64	
5186316	72582	3	6
5186318	72582	5	17
5186380	72582	6	
5186380-1	72582	6	10
5186380-2	72582	6	13
5186380-3	72582	6	19
5186394	72582	18	6
5186395	72582	18	3
5186396	72582	7	24
5186428	72582	5	
	72582	38	6
5186429	72582	5	3
5186439	72582	10	7
5186440	72582	10	7
5186459	72582	5	17
5186460	72582	5	13
	72582	38	5
5186476	72582	27	
5186570	72582	26	15
5186571	72582	26	14
5186572	72582	26	16
5186575	72582	26	12
5186576	72582	26	12
5187308	72582	3	7
	72582	36	7
5187309	72582	3	4
	72582	36	4
5187310	72582	3	5
	72582	36	5
5188439	72582	41	5
5188955	72582	43	5
5189847	72582	1	3
5191238	72582	63	6
5192157	72582	45	5
5192415	72582	45	6
5192637	72582	5	
5192801	72582	6	7
5193551	72582	28	11
5193553	72582	28	30
5193603	72582	27	8
5193605	72582	26	
5193694	72582	6	4
5193695	72582	6	21
5193697	72582	7	13
5193698	72582	7	12
5193702	72582	7	20
5193704	72582	7	14
5193705	72582	7	18
5193707	72582	7	16
5193708	72582	6	17
5193709	72582	6	18
5193710	72582	6	3
5194048	72582	6	20
5194567	72582	27	3
	72582	28	5
5194860	72582	28	
5194913	72582	42	27
5194914	72582	42	23
5194918	72582	42	25
5195020	72582	27	12
5195508	72582	42	28
5196393	72582	3	1
5196585	72582	27	7
5196629	72582	27	25
5196634	72582	7	15
5196638	72582	7	21
5196639	72582	7	1
5196640	72582	7	10
5197227	72582	27	
5198318	72582	13	
5198419	72582	28	19
5199161	72582	13	
52H5	66295	162	30
	66295	163	9
5226029	72582	5	23
5228305	72582	13	
5230007	72582	13	17
526	46576	158	15
5265	59730	139	42
5282897	72582	5	28
55Y	81909	25	10
5570480	70040	36	10
	72582	3	10
5571024	70040	36	12
	72582	3	12

Section V. INDEX-FEDERAL STOCK NUMBER AND REFERENCE NUMBER CROSS-REFERENCE TO FIGURE AND ITEM NUMBER

Reference No.	Mfg Code	Fig No.	Item No.
5572799	72582	3	8
5574008	72582	3	9
5574130	72582	36	8
5574252	72582	37	6
5574906	72582	36	9
5574978	72582	36	11
5575086	70040	36	15
	72582	3	15
5706	79470	51	44
5713	63686	102	18
	63686	103	12
591	89617	96	14
591RED	89617	156	16
596330	72582	33	
6-5TR8TXS	08752	49	51
6-6F8TXS	08752	49	52
60-160	59158	162	8
60SA08-12	30327	100	6
60SA20X20	30327	118	37
60SG12-12	30327	100	18
60SG20X20	30327	118	28
60SG24X24	30327	118	29
60TG20X20	30327	118	27
60UA08X12	30327	118	50
60UA08-12	30327	100	16
60UA16X16	30327	118	13
60UA20X20	30327	118	24
60UG24-24	30327	100	5
604-1-1-2	14959	161	23
606-2	14959	161	5
6111	76122	165	21
627	14959	19	11
630	14959	20	39
63103-3	81321	9	9
63108-3	81321	9	
6402505	72582	93	12
6402506	72582	93	11
6460283	72582	93	14
6460464	72582	93	15
6525065	72582	55	15
6525066	72582	55	11
6525073	72582	55	8
66	72671	157	12
6668337	81321	9	8
694203	72582	7	11
7590725-59	96906	63	13
70W	24161	23	15
701-1	05381	93	8
702	14959	159	9
712262	18877	51	35
7182621	18877	64	
7194	63686	103	11
72-24-229	26571	119	3
72-6-229	26571	119	1
72-7-229	26571	119	2
72A26-229	26571	119	4
72A27-229	26571	119	5
72A33-229	26571	119	6
72A34-229	26571	119	7
72A41-229	26571	119	8
72A42-229	26571	119	9
72851-229	26571	119	10
73005	85925	93	10
73103	85925	93	13
7335	81321	8	9
7411745	19207	23	41
74877A	00742	162	
7494	81321	8	10
75W	24161	23	24
752	31958	20	12
757	48422	163	1
76W	24161	21	4
	24161	21	6
	24161	21	10
	24161	21	14
77-10-206	26571	50	3
77-8-206	26571	50	2
77A44-206	26571	50	5
77845-206	26571	50	6
79NE080	17224	97	7
8FC24	97418	88	
8SA3006P	31211	46	

Reference No.	Mfg Code	Fig No.	Item No.
811912	16764	47	10
81413-8	14959	19	8
8290K16	97418	89	1
83-11247-03	24785	111	14
8414418	16764	47	9
8444K3	27193	90	4
846430	72582	41	
8502833	72582	5	19
	72582	38	13
850901	72582	18	26
8658-11	91940	148	4
8724752	19207	161	27
8901	81321	9	1
9-5-5478L	80064	93	1
954718L	80064	96	1
9000S620-74207	80064	92	8
9000S6202-74026	80064	92	1
9000S6202-74026APC	80064	92	7
9000S6202-74031PC1	80064	92	6
9000S6202-74427	80064	92	3
908730	05160	141	
9402711	72582	3	
9409961	72582	5	
9411504	72582	55	30
9413509	16764	47	7
	16764	47	40
9414418	16764	47	42
9421423	16764	47	3
	16764	47	26
9421427	16764	47	8
	16764	47	41
948-2IN	48422	23	37
9504-08	19738	117	8
959-2IN	94026	22	12
98306A	39428	97	8
99NE108	72922	30	10
9988851-2	18876	139	38

By Order of the Secretary of the Army:

CREIGHTON W. ABRAMS,
General, United States Army,
Chief of Staff

Official:

VERNE L. BOWERS,
Major General, United States Army,
The Adjutant General

Distribution:

To be distributed in accordance with DA Form 12-25D, (qty rqr block no. 814) Organizational maintenance requirements for Marine Equipment: All.

☆ U. S. GOVERNMENT PRINTING OFFICE : 1989 0 - 242-451 (05867)